California Stormwater Quality Association

Stormwater Best Management Practice Handbook

Construction

Copyright Statement

Copyright 2003 by the California Stormwater Quality Association, all rights reserved. Unless in conformance with the Permission to Use statement below, no part of this document may be reproduced or distributed in any form or by any means, or stored in a database or retrieval system, without the prior written permission of the California Stormwater Quality Association. Requests for permission shall be directed to CASQA at: info@casqa.org.

Permission to Use

Permission granted to user* by the California Stormwater Quality Association for:

1. Individual, personal single copy reproduction for an individual use only, not for resale;

2. Public agency, in-house multi-copy reproduction for distribution and use within a single public agency or MS4 areawide program only – not for resale; or

3. Public / business and trade association in-house multi-copy reproduction for distribution and use within a single public / business and trade association only – not for resale (excluding distribution to members).

Prior written approval of the California Stormwater Quality Association is required by user for any other use.

Restrictions Applicable to Commercial Reproduction

Commercial reproduction of individual or multiple copies, or portions thereof, is strictly prohibited without the prior written approval of CASQA. Requests for permission shall be directed to CASQA at: info@casqa.org.

* User – Individual or organization that receives a CASQA product directly from CASQA. Individuals or organizations that receive a CASQA product other than directly from CASQA are not considered users as the term is used in this Copyright Statement.

Acknowledgements

The Stormwater Best Management Practice Handbooks are products of the California Stormwater Quality Association (CASQA). The handbooks were originally published in 1993 by the California Stormwater Quality Task Force (SWQTF), the predecessor of CASQA. As part of this project, the original handbooks have been updated to reflect the current state of stormwater quality management practices and to make the handbook accessible via the Internet at www.cabmphandbooks.com.

CASQA is a nonprofit public benefit corporation and is not organized for private gain of any person. It is organized under the Nonprofit Public Benefit Corporation Law of California for charitable and educational purposes. The specific purpose of CASQA is to assist those entities charged with stormwater quality management responsibilities with the development and implementation of stormwater quality goals and programs. CASQA serves its members through various educational, technical, and scientific initiatives. The publication of the Stormwater Best Management Practice Handbooks is one of CASQA's educational and technical initiatives.

This project was funded through contributions from public agencies throughout California, whose support made the handbooks possible. Contributing agencies include:

State Agencies

California Department of Transportation

California State Water Resources Control Board

County Agencies

Alameda County

Contra Costa County

Los Angeles County

Marin County

Orange County

Sacramento County

Santa Barbara County

Santa Clara County

San Diego County

San Mateo County

Siskiyou County

Municipalities

City of Bakersfield

City of Carmel

City of Fairfield

City of Lodi

City of Long Beach

City of Modesto

City of Monterey

City of Sacramento

City of San Diego

City of Santa Rosa

City of Stockton

City of Visalia

City of Watsonville

City of Woodland

Special Districts

Fresno Metropolitan Flood Control District

Port of San Diego

Riverside County Flood Control and Water Conservation District

San Bernardino County Flood Control District

Vallejo Sanitation and Flood Control District

Ventura County Flood Control District

The development of the Stormwater Best Management Practice Handbooks was guided by a Steering Committee, a Technical Advisory Committee, and the CASQA BMP Workgroup. The Steering Committee provided CASQA's direction to the Consultant. The Steering Committee included representatives from Phase I communities, special districts, regulatory agencies, and consulting. The Technical Advisory Committee and BMP Workgroup reviewed draft work products and provided comments to the Steering Committee. The Technical Advisory Committee included representatives from Phase I communities, Phase II communities, regulatory agencies (water quality and health), academia, industry, transportation, and consulting. The quality of the handbooks is a result of the diverse expertise and experience of the committees and the workgroup.

Steering Committee

Scott Taylor, Committee Chair, RBF Consulting

Bruce Fujimoto, California State Water Resources Control Board

Naresh Varma, San Bernardino County Flood Control District

Karen Ashby, Orange County Public Facilities and Resources Department

Steve Stump, Riverside County Flood Control and Water Conservation District

Bill Busath, City of Sacramento

Mark Wills, Riverside County Flood Control and Water Conservation District

Melinda Marks, Fresno Metropolitan Flood Control District

Technical Advisory Committee

Scott Taylor, Committee Chair, RBF Consulting

John Johnston, California State University Sacramento Faculty Member

Karen Henry, City of San Diego

Jennifer Gonzalez, City of Monterey

Xavier Swamikannu, Los Angeles Regional Water Quality Control Board

Tim Piasky, Building Industry Association and Associated General Contractors

Marco Metzger, California Department of Health Services

Dan Barber, Concrete Industries

Jerry Marcotte, California Department of Transportation

U.S. Environmental Protection Agency

The County of San Bernardino and San Bernardino County Flood Control District, under the direction of Naresh Varma, Chief, Environmental Management Division, provided financial and contract management services on behalf of the California Stormwater Quality Task Force and the California Stormwater Quality Association for the update and revision of the Stormwater Best Management Practice Handbooks.

The Stormwater Best Management Practice Handbooks were prepared by the Camp Dresser & McKee Inc. (CDM) and Larry Walker Associates (LWA) team. The CDM-LWA team was led by Jeff Endicott, CDM Officer-in-Charge and Project Manager, and Mack Walker, LWA Project Manager. The handbook team included the following consultants and individuals:

Consultant Team

Camp Dresser & McKee Inc.

Jeff Endicott, P.E., Officer-in-Charge and Handbook Project Manager

Janelle Rogers, Ph.D., P.E. (WA) Assistant Project Manger

Don Schroeder, P.E.

Luis Leon, P.E.

Stephen Liao, P.E.

Brendan Boyd

Tracy Gaudino

Basheera Raheem-Streetz

Larry Walker Associates

Mack Walker, P.E., Handbook Project Manager

Heather Kirschmann

Erich Simon

Dean Messer, Ph.D.

Catalyst

Tom Richman, ASLA, AICP

Mike Barrett, Ph.D., P.E. (TX)

Geoff Brosseau

Gary Minton, Ph.D., P.E. (WA)

Disclaimer

The California Stormwater Quality Handbooks are intended to provide a range of general information about stormwater quality best management practices (BMPs) and related issues. Due to the multitude of applications of BMPs, the Handbooks do not address site-specific applications. Therefore, users of the Handbooks must seek advice of a stormwater quality professional to determine the applicability of the information provided for any general use or site-specific application. Users of the Handbooks assume all liability directly or indirectly arising from use of the Handbooks.

The mention of commercial products, their source, or their use in connection with material reported in the Handbooks is not to be construed as either an actual or implied endorsement, recommendation, or warranty of such product.

This disclaimer is applicable whether information from the Handbooks is obtained in hard copy form or downloaded from the Internet.

Table of Contents

Table of Contents i
List of Tables ii
List of Figures iii

Section 1 Introduction 1-5
1.1 Handbook Purpose and Scope 1-5
1.1.1 Users of the Handbook 1-5
1.1.2 Organization of the Handbook 1-6
1.1.3 Relationship to other Handbooks 1-7
1.2 Construction Sites and their Impacts on Water Quality 1-8
1.2.1 Pollutants Associated with Construction Activities 1-8
1.2.2 Erosion and Sedimentation 1-10
1.2.3 Other Pollutants 1-12
1.2.4 Impacts of Erosion and Sedimentation, and Other Pollutants 1-12
1.3 Regulatory Programs 1-14
1.3.1 Federal NPDES Programs 1-14
1.3.2 State NPDES Programs 1-14
1.3.3 Municipal NPDES Programs 1-16
1.4 Definitions 1-17
1.5 References 1-18

Section 2 Stormwater Pollution Prevention Plan 2-19
2.1 Introduction 2-19
2.2 Minimum Requirements 2-19
2.2.1 Sites Subject to General Permit Coverage 2-19
2.2.2 Other Sites 2-19
2.3 Assess Construction Site and Planned Activities 2-19
2.3.1 Contractor Activities 2-20
2.3.2 Disturbed Areas and Erosion Potential 2-20
2.3.3 Site History 2-20
2.4 Identify and Select BMPs 2-20
2.4.1 Define BMPs Objectives 2-21
2.4.2 Identify BMP Categories 2-21
2.4.3 Select BMPs 2-22

2.5 Stormwater Pollution Prevention Plans 2-23
2.5.1 SWPPP Preparation 2-23
2.5.2 SWPPP Template 2-23
2.6 SWPPP Implementation 2-24
2.6.1 Staff Training 2-24
2.6.2 Site Inspections 2-25
2.6.3 BMP Monitoring 2-25
2.6.4 BMP Maintenance 2-26
2.6.5 Stormwater Pollution Control Documentation 2-27

Section 3 Erosion and Sediment Control BMPs 3-1
3.1 Erosion Control 3-1
3.2 Sediment Control 3-2
3.3 Wind Erosion Control 3-3
3.4 Tracking Control BMPs 3-3
3.5 Erosion and Sediment Control BMP Fact Sheet Format 3-3
3.6 BMP Fact Sheets 3-3

Section 4 Non-Stormwater Management and Material Management BMPs 4-5
4.1 Non-Stormwater Management BMPs 4-5
4.2 Waste Management & Materials Pollution Control BMPs 4-6
4.3 Fact Sheet Format 4-7
4.4 BMP Fact Sheets 4-7

Section 5 Glossary and List of Acronyms 5-1
5.1 Glossary 5-1

List of Tables

Table 1-1 Pollutant Impacts on Water Quality 1-9
Table 1-2 Examples of Dust Sources at Construction Sites 1-11
Table 1-3 Other Construction Activity Pollutants 1-12
Table 3-1 Erosion Control BMPs 3-1
Table 3-2 Temporary Sediment Control BMPs 3-2
Table 3-3 Wind Erosion Control BMPs 3-3
Table 3-4 Temporary Tracking Control BMPs 3-3

Table 4-1 Non-Stormwater Management BMPs..... 4-5
Table 4-2 Waste Management & Materials Pollution Control BMPs 4-6

List of Figures

Figure 3-1 Example Fact Sheet 3-3
Figure 4-1 Example Fact Sheet 4-7

Appendices

Appendix A General Permit
Appendix B SWPPP Template
Appendix C Construction Stormwater Sampling and Analysis Guidance

Section 1
Introduction

Stormwater runoff is part of the natural hydrologic process. However, human activities such as urbanization and construction can impact stormwater runoff. Construction activities can alter natural drainage patterns and affect runoff water quality, adding pollutants to rivers, lakes, and streams as well as coastal bays and estuaries, and ultimately, the ocean. Urban runoff is a significant source of water pollution, causing possible declines in fisheries, restrictions on swimming, and limiting our ability to enjoy many of the other benefits that water resources provide (USEPA, 1992). Urban runoff in this context includes all flows discharged from urban land uses into stormwater conveyance systems and receiving waters and includes both dry weather non-stormwater sources (e.g., runoff from landscape irrigation, etc.) and wet weather stormwater runoff. In this handbook, urban runoff and stormwater runoff are used interchangeably.

For many years, the effort to control the discharge of stormwater focused on quantity (e.g., drainage, flood control) and, to a limited extent, on quality of the stormwater (e.g., sediment and erosion control). However, in recent years awareness of the need to improve water quality has increased. With this awareness federal, state, and local programs have been established to pursue the ultimate goal of reducing pollutants contained in stormwater discharges to our waterways. The emphasis of these programs is to promote the concept and the practice of preventing pollution at the source, before it can cause environmental problems (USEPA, 1992). However, where further controls are needed, treatment of polluted runoff may be required.

1.1 Handbook Purpose and Scope

The purpose of this handbook is to provide general guidance for selecting and implementing Best Management Practices (BMPs) that will eliminate or reduce the discharge of pollutants from construction sites to waters of the state. This handbook also provides guidance on developing and implementing Stormwater Pollution Prevention Plans (SWPPPs) that document the selection and implementation of BMPs for a particular construction project.

This handbook provides the framework for an informed selection of BMPs, and developments and implementation of a site-specific SWPPP. However, due to the diversity in climate, receiving waters, construction site conditions, and local requirements across California, this handbook does not dictate the use of specific BMPs and therefore cannot guarantee compliance with NPDES permit requirements or local requirements specific to the user's site.

1.1.1 Users of the Handbook

This handbook provides guidance suitable for use by a wide range of individuals involved in construction site water pollution control. Each user of the handbook is responsible for working within their capabilities obtained through training and experience, and for seeking the advice and consultation of appropriate experts at all times

The target audience for this handbook includes: developers, including their planners and engineers; contractors, including their engineers, estimators, superintendents, foremen,

tradesmen, and subcontractors; municipal agencies, including their engineers, municipal inspectors, building inspectors, permit counter staff, code enforcement officers, and construction staff; Regulatory agencies, including permit staff and enforcement staff, and the general public with an interest in stormwater pollution control.

1.1.2 Organization of the Handbook

The handbook is organized to assist the user in developing and implementing a stormwater program for construction sites to reduce potential impacts of both stormwater and non-stormwater discharges on receiving waters. The handbook consists of the following sections:

California Stormwater BMP Handbook - Construction

Section 1
Introduction
This section provides a general review of the sources and impacts of construction activity stormwater discharges and provides an overview of the federal, state, and local programs regulating stormwater discharges.

Section 2
Stormwater Pollution Prevention Planning for Construction
This section describes how to prepare and implement a SWPPP for a construction project. It covers minimum requirements, construction activity assessment, BMP selection, and stormwater control planning. A SWPPP template is provided to facilitate SWPPP development and review by providing easy data entry and consistency in SWPPP documents.

Section 3
Erosion and Sediment Control BMPs
This Section provides an overview of BMPs for erosion, sediment, wind, and tracking control.

Section 4
Non-Stormwater Management and Materials Management BMPs
This Section provides an overview of BMPs for non-stormwater management and materials management including waste materials and material stockpiles.

Section 5
Glossary and List of Acronyms
This section identifies terms and abbreviations used in the handbooks.

Appendix A
General Permit
This Appendix contains a copy of the construction General Permit for application to most construction activities in the state.

Appendix B
SWPPP Template
This Appendix provides the SWPPP Template that was developed as an assistance tool for SWPPP preparation and review. The template contains elements required by the General Permit.

Appendix C
Construction Storm Water Sampling and Analysis Guidance Document
This Appendix contains a copy of the California Stormwater Quality Task Force's Construction Storm Water Sampling and Analysis Guidance Document

1.1.3 Relationship to other Handbooks

This handbook is one of four handbooks that have been developed by the California Stormwater Quality Association (CASQA) to address BMP selection. Collectively, the four handbooks address BMP selection throughout the life of a project – from planning and design – through construction – and into operation and maintenance. Individually, each handbook is geared to a specific target audience during one stage of the life of a project. This handbook, the Construction Handbook, addresses selection and implementation of BMPs to eliminate or to reduce the discharge of pollutants associated with construction activity.

Project Lifecycle

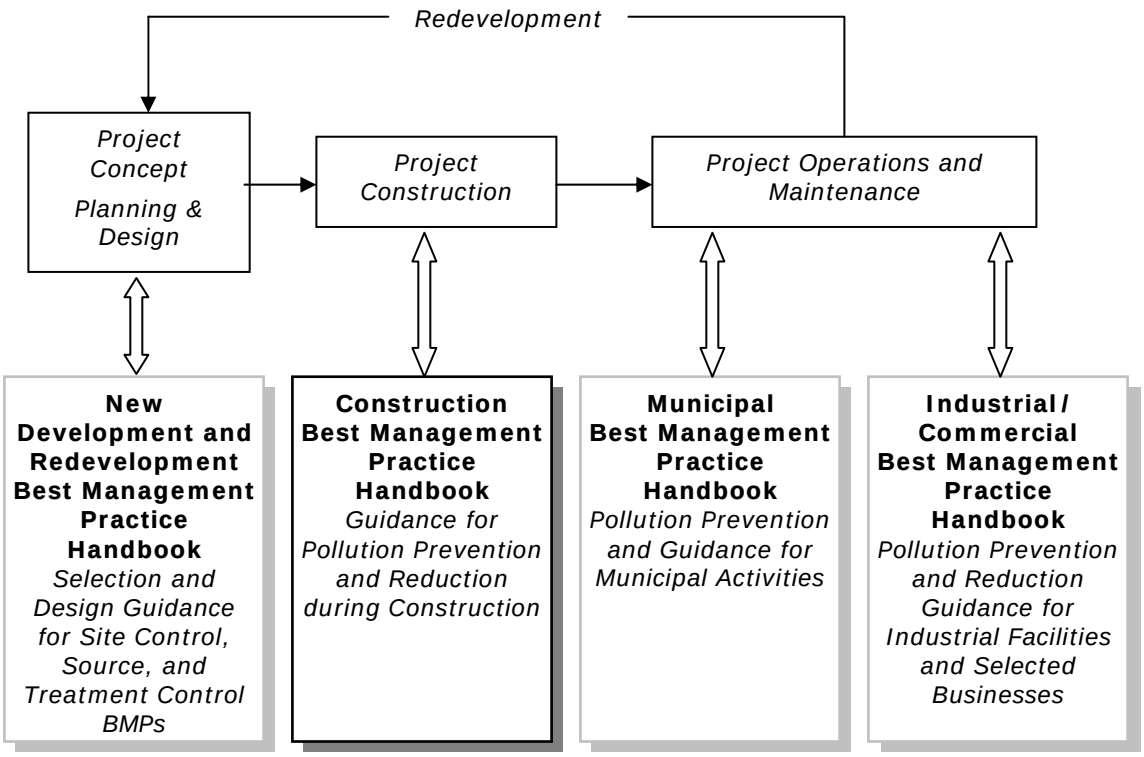

For a comprehensive understanding of stormwater pollution control throughout the life cycle of a project, it is recommended that the reader obtain and become familiar with all four handbooks. Typically, municipal stormwater program managers, regulators, environmental organizations, and stormwater quality professionals will have an interest in all four handbooks. For a focused understanding of stormwater pollution control during a single phase of the project life cycle, a reader may obtain, and become familiar with, the handbook associated with the appropriate phase. Typically, contractors, construction inspectors, industrial site operators, commercial site operators, some regulators and some municipal staff may have an interest in a single handbook.

1.2 Construction Sites and their Impacts on Water Quality

1.2.1 Pollutants Associated with Construction Activities

Stormwater runoff naturally contains numerous constituents. However, urbanized and urban activities such as construction increase constituent concentrations to levels that impact water quality. Pollutants associated with stormwater include sediment, nutrients, bacteria and viruses, oil and grease, metals, organics, pesticides, gross pollutants (floatables), and miscellaneous waste Some constituents can also affect the pH of stormwater. Stormwater runoff can also be highly attractive to vector organisms, particularly mosquitoes, which can impact public health and become a legal liability. Stormwater pollutants are described in Table 1-1.

Excessive erosion and sedimentation are perhaps the most visible water quality impacts due to construction activities. Other less visible impacts are associated with off-site discharge of pollutants such as metals, nutrients, soil additives, pesticides, construction chemicals, and other construction waste. The magnitude of stormwater impacts depends on construction activities, climatic conditions, and site conditions. Development of a comprehensive SWPPP requires a basic understanding of the impacts, pollutant sources and other contributing factors, as well as BMPs to eliminate or reduce these impacts.

Table 1-1 Pollutant Impacts on Water Quality

Sediment	Sediment is a common component of stormwater, and can be a pollutant. Sediment can be detrimental to aquatic life (primary producers, benthic invertebrates, and fish) by interfering with photosynthesis, respiration, growth, reproduction, and oxygen exchange in water bodies. Sediment can transport other pollutants that are attached to it including nutrients, trace metals, and hydrocarbons. Sediment is the primary component of total suspended solids (TSS), a common water quality analytical parameter.
Nutrients	Nutrients including nitrogen and phosphorous are the major plant nutrients used for fertilizing landscapes, and are often found in stormwater. These nutrients can result in excessive or accelerated growth of vegetation, such as algae, resulting in impaired use of water in lakes and other sources of water supply. For example, nutrients have led to a loss of water clarity in Lake Tahoe. In addition, un-ionized ammonia (one of the nitrogen forms) can be toxic to fish.
Bacteria and viruses	Bacteria and viruses are common contaminants of stormwater. For separate storm drain systems, sources of these contaminants include animal excrement and sanitary sewer overflow. High levels of indicator bacteria in stormwater have led to the closure of beaches, lakes, and rivers to contact recreation such as swimming.
Oil and Grease	Oil and grease includes a wide array of hydrocarbon compounds, some of which are toxic to aquatic organisms at low concentrations. Sources of oil and grease include leakage, spills, cleaning and sloughing associated with vehicle and equipment engines and suspensions, leaking and breaks in hydraulic systems, restaurants and waste oil disposal.
Metals	Metals including lead, zinc, cadmium, copper, chromium, and nickel are commonly found in stormwater. Many of the artificial surfaces of the urban environment (e.g., galvanized metal, paint, automobiles, or preserved wood) contain metals, which enter stormwater as the surfaces corrode, flake, dissolve, decay, or leach. Over half the trace metal load carried in stormwater is associated with sediments. Metals are of concern because they are toxic to aquatic organisms, can bioaccumulate (accumulate to toxic levels in aquatic animals such as fish), and have the potential to contaminate drinking water supplies.
Organics	Organics may be found in stormwater in low concentrations. Often synthetic organic compounds (adhesives, cleaners, sealants, solvents, etc.) are widely applied and may be improperly stored and disposed. In addition, deliberate dumping of these chemicals into storm drains and inlets causes environmental harm to waterways.
Pesticides	Pesticides (including herbicides, fungicides, rodenticides, and insecticides) have been repeatedly detected in stormwater at toxic levels, even when pesticides have been applied in accordance with label instructions. As pesticide use has increased, so too have concerns about adverse effects of pesticides on the environment and human health. Accumulation of these compounds in simple aquatic organisms, such as plankton, provides an avenue for biomagnification through the food web, potentially resulting in elevated levels of toxins in organisms that feed on them, such as fish and birds.
Gross Pollutants	Gross Pollutants (trash, debris, and floatables) may include heavy metals, pesticides, and bacteria in stormwater. Typically resulting from an urban environment, industrial sites and construction sites, trash and floatables may create an aesthetic "eye sore" in waterways. Gross pollutants also include plant debris (such as leaves and lawn-clippings from landscape maintenance), animal excrement, street litter, and other organic matter. Such substances may harbor bacteria, viruses, vectors, and depress the dissolved oxygen levels in streams, lakes, and estuaries sometimes causing fish kills.
Vector Production	Vector production (e.g., mosquitoes, flies, and rodents) is frequently associated with sheltered habitats and standing water. Unless designed and maintained properly, standing water may occur in treatment control BMPs for 72 hours or more, thus providing a source for vector habitat and reproduction (Metzger, 2002).

1.2.2 Erosion and Sedimentation

Soil erosion is the process by which soil particles are removed from the land surface by wind, water, or gravity. Most natural erosion occurs at slow rates; however, the rate of erosion increases when land is cleared or altered and left unprotected. Construction sites, if unprotected, can erode at rates in excess of one hundred times the natural background rate of erosion.

Sediment resulting from excessive erosion is a pollutant. Sedimentation is defined as the settling out of particles transported by water. Sedimentation occurs when the velocity of water is slowed sufficiently allow suspended soil particles to settle. Larger particles, such as gravel and sand, settle more rapidly than fine particles such as silt and clay. Effective sediment control begins with proper erosion control, which minimizes the availability of particles for settling downstream.

Erosion from Rainfall Impact

The impact of raindrops on bare soil can cause erosion. On undisturbed soil protected by vegetation or other cover, the erosion is minimal. Construction activities increase the amount of exposed and disturbed soil, which increases erosion potential from rainfall.

Sheet Erosion

After rainfall strikes the ground, it flows in a thin layer for a short distance. The distance of sheet flow depends on slope, soil roughness, type of vegetative cover, and rainfall intensity. Erosion due to sheet flow on undisturbed soils is minimal and greater on soils disturbed by construction. However, sheet flows are capable of transporting soil particles dislodged by the impact of raindrops onto bare soil, and thus cannot be ignored.

Rill and Gully Erosion

As runoff accumulates, it concentrates in rivulets that cut grooves (rills) into the soil surface. Rills generally run parallel to one another and to the slope of the soil surface. If left unchecked, several rills may join together to form a gully. Rills are small enough to be stepped across, whereas a gully requires added effort to be traversed. The rate of rill erosion can easily be one hundred times greater than that of sheet flow, and the rate of gully erosion can easily be one hundred times greater than rill erosion. Due to the significant amount of sediment generated by rill and gully erosion, these types of erosion must be given top priority for elimination, reduction, and control. Rills and gullies form sooner on exposed soils than on vegetated soils.

Stream and Channel Erosion

In general, one or more of the following factors that may occur during construction can change the hydrology of the area to affect erosion of the banks and bottoms of natural drainage channels:

- Clearing the soil and re-contouring the site during construction may increase the volume and rate of runoff leaving the site.

- Replacing pervious natural ground with impervious cover such as buildings and pavement further increases runoff.
- Detention basins used to capture sediment extend the duration of flows leaving the site.

Control of erosion in streams and channels downstream of the construction site as a result of construction activities is a complex issue and is usually best addressed by local agencies through a comprehensive drainage master plan. Where these plans are available, the local drainage-planning agency may specify specific BMP requirements applicable to construction projects, which in turn must be incorporated into the SWPPP. Where these plans are not available, the goal of the SWPPP should be to minimize the difference between the predevelopment, construction, and post-construction hydrographs, and to minimize increases in sediment discharges. In some situations, local agencies may require developers of large projects to conduct a study of the specific impacts related to development of the project. This will most likely be the case where municipal permits include new development and redevelopment provisions such as Standard Urban Stormwater Mitigation Plans (SUSMPs).

Wind Erosion

Dust is defined as solid particles or particulate matters which are predominately large enough to eventually settle out from the air but small enough to remain temporarily suspended in the air for an extended period of time. Dust from a construction site originates from rock and soil surfaces, material storage piles and construction materials. It is generated by earthwork, demolition, traffic on unpaved surfaces, and strong winds. See Table 1-2.

Table 1-2 Examples of Dust Sources at Construction Sites

Vehicle and Equipment Use	Exposed Areas	Contractor Activities
■ Vehicle and equipment entering and leaving the project site ■ Vehicle and equipment movement and use within the project site ■ Sediment tracking off-site ■ Temporary parking lots and staging areas ■ On-site construction traffic	■ Areas of exposed soil that have been cleared and grubbed ■ Areas of exposed soil that have been excavated, filled, compacted, or graded ■ Construction staging areas ■ Vehicle and equipment storage and service areas ■ Material processing areas and transfer points. ■ Construction roads ■ Construction sites, bare ground areas ■ Spilled materials ■ Construction stockpiles ■ Soil and debris piles	■ Land clearing and grubbing ■ Earthwork including soil excavation, filling, soil compaction, rough grading, and final grading ■ Drilling and blasting ■ Materials handling, including material stockpiling, transfer, and processing ■ Batch dropping, dumping ■ Conveyor transfer and stacking ■ Material transferring ■ Crushing, milling and screening operations ■ Demolition and debris disposal ■ Tilling

1.2.3 Other Pollutants

Erosion and sedimentation discharges are perhaps the most visible and significant source of pollutants associated with construction sites. However, pollutants such as nutrients, bacteria, viruses, oil, grease, metals, organics, pesticides, gross pollutants, and vectors must always be considered, as they can be associated with both acute and chronic problems in receiving waters. Table 1-3 presents a matrix that identifies the most common source of these other pollutants at construction sites.

Table 1-3 Other Construction Activity Pollutants

Construction Activity	Pollutants						
	Sediment	Nutrients	Trace Metals	Pesticides	Oil, Grease, Fuels	Other Toxic Chemicals	Miscellaneous Waste
Construction Practices							
Dewatering Operations	X					X	
Paving Operations	X			X	X	X	X
Structure Construction/Painting			X			X	X
Material Management							
Material Delivery and Storage	X	X	X	X	X	X	
Material Use		X	X	X	X	X	
Waste Management							
Solid Waste	X	X					X
Hazardous Waste						X	
Contaminated Spills	X					X	
Concrete Waste							X
Sanitary/Septic Waste							X
Vehicle/Equipment Management						X	X
Vehicle/Equipment Fueling						X	X
Vehicle/Equipment Maintenance						X	X

1.2.4 Impacts of Erosion and Sedimentation, and Other Pollutants

The impacts due to erosion and sedimentation can be placed in three categories:

- Degradation of aquatic and riparian ecosystems
- Pollutant transport
- Erosion of land and sedimentation within waterways and public facilities (i.e. storm drains).

Sediment can be detrimental to aquatic life (primary producers, benthic invertebrates, and fish) by interfering with photosynthesis, respiration, growth, reproduction, and oxygen exchange in water bodies. In addition, sediment particles can transport other pollutants that are attached to them including nutrients, trace metals, and hydrocarbons. Sediment particles such as silts and clays are the primary components of total suspended solids (TSS), a common water quality analytical parameter.

In addition to impacts directly associated with sedimentation, various pollutants can also be transported along with sediment particles leaving construction sites. Such pollutants include metals, nutrients, conventional pollutants, pesticides, and coliform. These pollutants often originate from organic components, plant residues, and nutrient elements within soils on the construction site, and are thus mobilized by erosion and later deposited downstream during sedimentation. Alternatively, these other pollutants may be generated independent of erosion and because of their nature can have significant detrimental affects to receiving waters.

Construction activity may cause increased erosion and sedimentation within waterways and public facilities. Some construction activity will increase impervious area and/or change drainage patterns, resulting in increased runoff volumes and rates, which have the potential to erode downstream watercourses. Other construction activities such as grading may increase erosion from the construction site by disturbing and exposing the soil. The eroded soil particles from the construction site may flow downstream and fill drainage systems, reservoirs, and harbors.

In order to control the impact of erosion, sedimentation, and other pollutants on receiving waters, the *State Water Resources Control Board (SWRCB) Order No. 99-08-DWQ, National Pollutant Discharge Elimination System (NPDES) General Permit No. CAS000002, Waste Discharge Requirements (WDRs) for Discharges of Stormwater Runoff Associated with Construction Activity (General Permit)* requires the implementation of BMPs to eliminate or reduce the discharge of pollutants in stormwater discharges, and prohibits the discharge of non-stormwater from the construction site as these non-stormwater discharges are likely to carry pollutants to receiving waters. The General Permit recognizes that discharges of non-stormwater may be necessary for the completion of certain construction projects. Such discharges include, but are not limited to:

- Irrigation of vegetative erosion control measures

- Pipe flushing and testing
- Street cleaning, and
- Dewatering

Such discharges are authorized by this General Permit as long as they (a) do comply with Section A.9 of the General Permit, (b) do not cause or contribute to violation of any water quality standard, (c) do not violate any other provision of the General Permit, (d) do not require a non-stormwater permit as issued by some RWQCBs, and (e) are not prohibited by a Basin Plan. If a non-stormwater discharge is subject to a separate permit adopted by a RWQCB, the discharge must additionally be authorized by the RWQCB.

1.3 Regulatory Programs

The need to protect our environment has resulted in a number of laws and subsequent regulations and programs. In the following sections, various federal, state, and local programs are discussed in relationship to the control of pollutants in stormwater. The programs are expected to change over the next several years and the user is advised to contact state and local officials for further information.

1.3.1 Federal NPDES Programs

In 1972, the Federal Water Pollution Control Act (also referred to as the Clean Water Act [CWA]) was amended to provide that the discharge of pollutants to waters of the United States from any point source is unlawful unless the discharge is in compliance with an NPDES permit. The 1987 amendments to the CWA added Section 402(p), which establishes a framework for regulating municipal and industrial stormwater discharges, including discharges associated with construction activities, under the NPDES Program.

On November 16, 1990, the U.S. Environmental Protection Agency (USEPA) published final regulations that establish stormwater permit application requirements. The regulations, also known as Phase I of the NPDES program, provide that discharges of stormwater to waters of the Unites States from construction projects that encompass five or more acres of soil disturbance are effectively prohibited unless the discharge complies with an NPDES Permit.

Phase II of the NPDES program expands the requirements by requiring operators of small MS4s in urbanized areas and small construction sites to be covered under an NPDES permit, and to implement programs and practices to control polluted stormwater runoff. The program applies to:

- Operators of small MS4s located in “urbanized areas” as delineated by the Bureau of the Census. A “small” MS4 is any MS4 not already covered by the Phase I NPDES stormwater program.
- Small construction sites with a soil disturbance equal to or greater than one and less than five acres of land or part of a larger common plan of development which disturbs more than one acre.

1.3.2 State NPDES Programs

In California, the NPDES stormwater permitting program is administered by the State Water Resources Control Board (SWRCB) through its nine Regional Water Quality Control Boards (RWQCBs). The SWRCB has established a construction General Permit that can be applied to most construction activities in the state. Construction permittees may choose to obtain individual NPDES permits instead of obtaining coverage under the General Permit, but this can be an expensive and complicated process, and its use should generally be limited to very large construction projects that discharge to critical receiving waters. Because individual permits are rare and would likely follow the General Permit to a large extent, this Handbook is structured around the General Permit.

In California, owners of construction projects may obtain NPDES permit coverage by filing a Notice of Intent (NOI) to be covered under the *State Water Resources Control Board (SWRCB) Order No. 99-08-DWQ, National Pollutant Discharge Elimination System (NPDES) General Permit No. CAS000002, Waste Discharge Requirements (WDRs) for Discharges of Stormwater Runoff Associated with Construction Activity (General Permit)* and subsequent adopted modifications.

The primary objectives of the General Permit are to:

- Reduce erosion
- Minimize or eliminate sediment in stormwater discharges
- Prevent materials used at a construction site from contacting stormwater
- Implement a sampling and analysis program if stormwater is exposed to construction materials.
- Eliminate unauthorized non-stormwater discharges from the construction sites
- Implement appropriate measures to reduce potential impacts on waterways both during and after construction of projects
- Establish maintenance commitments on post-construction pollution control measures

Failure to comply with the General Permit may result in significant fines for each violation and possible imprisonment.

Who must comply with the Construction General Permit?

- The General Permit applies to stormwater discharges associated with construction activity which disturbs one acre or greater of soil.
- The owner of the land is responsible for compliance.

Who does not need to seek coverage under the Construction General Permit?

- Projects on Tribal Lands, in the Lake Tahoe Hydrologic Unit, the San Jacinto Watershed, covered by an individual NPDES Permit for stormwater discharges, and landfill construction that is subject to the General Industrial Permit.

- Activities to maintain the original line, grade, and hydraulic function of a facility, and emergency activities, do not require coverage under the General Permit. However, reasonable pollution control during these activities may still be required under other state and local regulations and ordinances.

- Construction activities meeting all three of the following criteria do not require coverage under the General Permit; (1) result in soil disturbances of less than one acre, (2) are not part of a larger common plan of development that disturbs one or more acres of soil, and (3) do not constitute a threat to water quality.

How to comply with Construction General Permit

- Submit a Notice of Intent (NOI) and pay fees prior to the beginning of construction. Allow ten working days for processing the NOI and issuing the WDID number. A copy of the General Permit (SWQ 99-08) and the NOI can be found at http://www.swrcb.ca.gov/stormwtr/construction.html or in Appendix A.

- Prepare the SWPPP before construction begins. The SWPPP describes:

  - The project location, site features, and materials/activities that may result in the off-site discharge of pollutants during construction.

  - Controls to be implemented during construction - BMPs selected to control erosion, the discharge of sediment, and other pollutant sources.

  - An inspection and maintenance program for BMPs.

  - A sampling and analysis plan for sediment discharges to impaired water bodies as well as a plan to sample for non-visible pollutants.

  - Post construction controls – BMPs to prevent or control pollutants in runoff after construction is complete, including long-term maintenance.

- Keep the SWPPP on the site; implement it during construction and revise it as needed to reflect all phases of construction.

- Submit Notice of Termination (NOT) when construction is complete and conditions of termination listed in the NOT have been satisfied. A copy of the NOT can be found at http://www.swrcb.ca.gov/stormwtr/construction.html or at Attachment P in Appendix B.

1.3.3 Municipal NPDES Programs

Phase I Municipal Stormwater Program and municipal NPDES Permits cover and regulate municipalities with populations of over 100,000, drainage systems interconnected with these municipalities' systems, or municipalities determined to be significant contributors of pollutants. In California, most of the major urbanized counties have already obtained NPDES stormwater permits.

Municipalities with NPDES stormwater permits for their own municipal separate storm sewer system (MS4s) are responsible for developing a management program for public and private construction activities in their jurisdiction. Each program addresses appropriate planning and construction procedures; ensures the implementation, inspection, and monitoring of construction sites which discharge stormwater into their systems; and provides for education and training for construction site operators.

Phase II of the Stormwater Program will regulate municipalities with populations less than 100,000, including urbanized areas (areas with a population of 50,000 and density greater than 1,000 people per square mile), cities, and county areas designated by the state based on site-specific criteria, and various state and federal facilities. Each designated entity must submit a Notice of Intent (NOI) along with a copy of its Stormwater Management Program. The Phase II Stormwater Management Program must address six minimum control measures, including the following measures related to construction activities:

- Illicit Discharge Detection and Elimination - Developing and implementing a plan to detect and eliminate illicit discharges to the storm drain system including illicit connections and illegal dumping.

- Construction Site Stormwater Runoff Control - Developing, implementing, and enforcing an erosion and sediment control program for construction activities that disturb one or more acres of land.

- Post Construction Stormwater Management in New Development and Redevelopment - Developing, implementing, and enforcing a program to address discharges of stormwater runoff from new and redevelopment areas.

While Phase I and Phase II programs for construction sites vary throughout the state, the programs have many similarities, including the requirement for construction sites to comply with the General Permit. For specific information on local program requirements, construction site owners must contact the municipal stormwater program coordinator in the jurisdiction where the project will be constructed.

1.4 Definitions

Many of the most common terms related to stormwater quality control are defined in the Glossary (see Section 5). Throughout the handbook, the user will find references to the following terms:

NPDES General Permit for Stormwater Discharges. NPDES is an acronym for National Pollutant Discharge Elimination System. NPDES is the national program for administering and regulating Sections 307, 318, 402, and 405 of the Clean Water Act (CWA). In California, the State Water Resources Control Board (SWRCB) has issued a General Permit for stormwater discharges associated with industrial activities (see Appendix A).

Notice of Intent (NOI) is a formal notice to the SWRCB submitted by the owner/operators of existing industrial facilities. The NOI provides information on the permittee, location of discharge, type of discharge and certifies that the permittee will comply with conditions of the Industrial General Permit. The NOI is not a permit application and does not require approval.

Sediment includes particles of sand, clay, silt, and other substances that settle at the bottom of a body of water. Sediment can come from the erosion of soil or from the decomposition of plants and animals. Wind, water, and ice often carry these particles great distances.

Stormwater Pollution Prevention Plan (SWPPP) is a written plan that documents the series of phases and activities that, first, characterizes your site, and then, prompts the implementers to select and carry out actions which reduce pollutants in stormwater discharges.

Stormwater Pollution Control Plan (SWPCP) is a less formal plan than the SWPPP that addresses the implementation of BMPs at facilities and businesses not covered by a General Permit but that have the potential to discharge pollutants.

Best Management Practices (BMP) is defined as any program, technology, process, siting criteria, operating method, measure, or device, which controls, prevents, removes, or reduces pollution.

Source Control BMPs are operational practices that prevent pollution by reducing potential pollutants at the source.

Treatment Control BMPs are methods of treatment to remove pollutants from stormwater.

1.5 References

Berman, L., C. Hartline, N. Ryan, and J. Thorne, (1991), *Urban Runoff: Water Quality Solutions*. American Public Works Association, Special Report #61.

Clark County Stormwater Pollution Control Manual Best Management Practices for Business and Government Agencies. 2000, Clark County Environmental Services Division. November 2000. On-line: http://www.co.clark.wa.us/pubworks/BMPman.pdf

King County Stormwater Pollution Control Manual. Best Management Practices for Businesses. King County Surface Water Management. July 1995. On-line: http://dnr.metrokc.gov/wlr/dss/spcm.htm

Metzger, M.E., D. F. Messer, C. L. Beitia, C. M. Myers, and V. L. Kramer, 2002. *The Dark Side of Stormwater Runoff Management: Disease Vectors Associated with Structural BMPs*. Stormwater 3(2): 24-39.

National Stormwater Best Management Practices Database. American Society of Civil Engineers, 1999. On-line: http://www.asce.org

Pierce County Stormwater Pollution Prevention Manual: A Guide to Best Management Practices for Industries, Businesses and Homeowners. Pierce County Public Works and Utilities. Revised March 2002. On-line: http://www.co.pierce.wa.us/services/home/environ/water/swm/sppman/index.htm

State of California Department of Transportation (Caltrans), Stormwater Quality Handbooks. 2000.

State of California Department of Transportation (Caltrans) Stormwater Quality Handbooks. Construction Contractor's Guide and Specifications. 1997.

State of California Department of Transportation (Caltrans), Stormwater Quality Handbooks. 1993.

State Water Resources Control Board, (1999), *NPDES General Permit No. CA2000002: Waste Discharge requirements for Discharges of Storm Water Runoff Associated with Construction Activity*. On-line: http://www.swrcb.ca.gov/stormwtr/construction

Stormwater Managers Resource Center. On-line: http://www.stormwatercenter.net

United States Environmental Protection Agency, Region 9: Water Programs: NPDES Storm Water Program. On-line: http://www.epa.gov/region09/water/npdes/stormwater.html

United States Environmental Protection Agency, (1992), *Draft Stormwater Pollution Prevention for Industrial Activities*, Office of Wastewater Enforcement and Compliance.

United States Environmental Protection Agency, (2000), *Storm Water Phase II Final Rule*, Office of Water. On-line: http://www.epa.gov/npdes/pubs/fact1-0.pdf

Urban Runoff Quality Management. Water Environment Federation/American Society of Civil Engineers. 1998. On-line: http://www.wef.org

Section 2
Stormwater Pollution Prevention Plan

2.1 Introduction

This section describes the preparation and implementation of a stormwater pollution prevention plan (SWPPP) for a construction project. A SWPPP must be prepared before construction begins, ideally during the project planning and design phases. This is because much of the information required by the SWPPP is already part of the project design documentation, and because the design may need to be modified to incorporate controls during construction and post-construction. It may be completed at the end of the design phase or at the initiation of the construction phase prior to any activity with the potential to cause water pollution.

Implementation of the SWPPP begins when construction begins, typically before the initial clearing, grubbing, and grading operations, since these activities can usually increase erosion potential on the site. During construction, the SWPPP should be referred to frequently, and amended by the owner and contractors as changes occur in construction operations, which could have significant effects on the potential for discharge of pollutants.

2.2 Minimum Requirements

2.2.1 Sites Subject to General Permit Coverage

A construction project is subject to the General Permit[1] if it disturbs one acre or more of soil, or the project results in the disturbance of less than one acre but is part of a larger common plan of development or sale of one or more acres. Construction sites that result in soil disturbance of one acre or greater will require the preparation and implementation of a SWPPP meeting the requirements of the General Permit.

2.2.2 Other Sites

Construction projects with a disturbed area of less than one acre are not covered under the General Permit at this time and therefore are not required by the SWRQCB to develop a SWPPP. However, the local municipality or Regional Water Quality Control Board (RWQCB) may require the development of a SWPPP for all projects that require a grading permit or if it is determined that the project poses a significant water quality risk threat. The owner should contact local authorities to determine local requirements.

2.3 Assess Construction Site and Planned Activities

The planning phase is the source of much of the information needed for the SWPPP. The basis for stormwater pollution control decisions is also made at this phase via the normal review process with the local municipality. Information to be collected includes contractor activities, disturbed areas and erosion potential, and site history.

---

[1] State Water Resources Control Board (SWRCB) Order No. 99-08-DWQ, National Pollutant Discharge Elimination System (NPDES) General Permit No. CAS000002, Waste Discharge Requirements (WDRs) for Discharges of Stormwater Runoff Associated with Construction Activity (General Permit).

2.3.1 Contractor Activities

Information about contractor activities is required for the selection of proper BMPs. Details that should be recorded include:

- Equipment storage, cleaning and maintenance areas and activities
- Points of ingress and egress to the construction site
- Material loading, unloading, and storage practices and areas, including construction materials, building materials and waste materials.
- Materials, equipment, or vehicles that may come in contact with stormwater

2.3.2 Disturbed Areas and Erosion Potential

The physical condition of the site and adjacent areas should be reviewed. A project layout showing what is being constructed, limits of construction, project schedule, and existing features should be developed. Site characteristics including drainage patterns, soils, vegetation, surface water bodies, and steep or unstable slopes should be noted. A hydrology report, soils report, and a grading/drainage plan should be prepared. Physical conditions at the site will change as construction progresses. The SWPPP must be amended to address conditions as activities change at the site.

The hydrology reports should assess information such as drainage areas and patterns, rainfall information and expected run-on and runoff volumes and flow rates, etc. A soil report will identify soil constraints, design criteria, and soil stability. Both of these reports are used in the preparation of the preliminary grading and drainage plan. The grading and drainage plan should identify areas of cut and fill, slope during and after grading, protection of existing vegetation, and areas of soil disturbance. They also form the technical basis for selection of erosion and sediment control BMPs.

2.3.3 Site History

Existing site characteristics such as vegetation, environmental features, and areas of historic contamination (natural and/or industrial or agricultural) should also be recorded on the project layout. Soil laboratory analysis may be required should prior contamination be suspected. The selection and implementation of construction BMPs will be affected by what existing features need to be protected or mitigated during construction.

2.4 Identify and Select BMPs

The owner, the owner's design consultant, or the contractor, may select BMPs at the discretion of the owner. The contract between the owner and contractor should specify the responsibilities of the owner and contractor with regards to stormwater pollution control during construction. Owners must be aware that regardless of the contractual agreement between the owner and contractor with respect to BMP selection and SWPPP implementation, the owner is ultimately responsible for compliance with the General Permit.

A guide to selecting BMPs for construction activities is presented in the following sections. BMPs are generally selected in a three-step process:

- Define BMP Objectives
- Identify BMP category
- Select appropriate BMPs

2.4.1 Define BMPs Objectives

Selection and implementation of BMPs is based on the pollution risks associated with the construction activity. The pollution prevention objectives of BMPs are defined based on a review of information gathered during the assessment of the site and planned activities (Section 2.3). Once defined, BMP objectives are developed and BMPs selected. The BMP objectives for construction projects are as follows:

- Control of Erosion, and Discharge of Sediment:
  - Minimize Disturbed Areas: Only clear land which will be actively under construction in the near term (e.g., within the next 6-12 months), minimize new land disturbance during the rainy season, and avoid clearing and disturbing sensitive areas (e.g., steep slopes and natural watercourses) and other areas where site improvements will not be constructed.
  - Stabilize Disturbed Areas: Provide temporary stabilization of disturbed soils whenever active construction is not occurring on a portion of the site. Provide permanent stabilization during finish grade and landscape the site.
  - Protect Slopes and Channels: Safely convey runoff from the top of the slope and stabilize disturbed slopes as quickly as possible. Avoid disturbing natural channels. Stabilize temporary and permanent channel crossings as quickly as possible and ensure that increases in runoff velocity caused by the project do not erode the channel.
  - Control Site Perimeter: Delineate site perimeter to prevent disturbing areas outside the project limits. Divert upstream run-on safely around or through the construction project. Local codes usually state that such diversions must not cause downstream property damage, or be diverted into another watershed. Runoff from the project site should be free of excessive sediment and other constituents. Control tracking at points of ingress to and egress from the project site.
  - Retain Sediment: Retain sediment-laden waters from disturbed, active areas within the site.
- Manage Non-Stormwater Discharges and Materials:
  - Practice Good Housekeeping: Perform activities in a manner to keep potential pollutants from coming into contact with stormwater or being transported off site to eliminate or avoid exposure.

- Contain Materials and Wastes: Store construction, building, and waste materials in designated areas, protected from rainfall and contact with stormwater runoff. Dispose of all construction waste in designated areas, and keep stormwater from flowing onto or off of these areas. Prevent spills and clean up spilled materials.

2.4.2 Identify BMP Categories

Once the BMP objectives are defined, identify the category of BMP best suited to meet each objective. The particular BMP selected from each category depends on specific site conditions, construction activities, and cost considerations.

There are six BMP categories available for selection. They are:

- Erosion Control (EC)
- Sediment Control (SE)
- Wind Erosion Control (WE)
- Tracking Control (TR)
- Non Stormwater Management (NS)
- Waste Management and Materials Pollution Control (WM)

BMPs for contractor activities are listed in the TR, NS, and WM categories. BMPs for erosion and sediment control are listed in the EC, SE, WE, and TR categories.

2.4.3 Select BMPs

BMPs for Erosion and Sediment Control

BMPs for erosion and sediment control are selected to meet the BMP objectives based on specific site conditions, construction activities, and cost. Various BMPs may be needed at different times during construction since activities are constantly changing site conditions.

Selection of erosion control BMPs should be based on minimizing disturbed areas, stabilizing disturbed areas, and protecting slopes and channels. Selection of sediment control BMPs should be based on retaining sediment on-site and controlling the site perimeter. Erosion and sediment control BMPs are listed in the EC, SE, WE, and TR categories, which are presented in Section 3.

BMPs for Contractor Activities

Certain contractor activities may cause pollution if not properly managed. BMPs should be selected based on the contractor activities information collected in the SWPPP. The materials and BMP objectives for contractor activities are practicing good housekeeping and containing materials and waste. BMPs for contractor activities are selected from the TR, NS and WM categories, which are presented in Sections 3 (TR) and 4 (NS, WM). Several considerations for selecting a BMP for contractor activities include:

- Is it expected to rain? Selection of a BMP is different for the rainy season versus the dry season. What activities can be postponed or re-scheduled until after the rains or performed during the dry season.

- How much water is being used? The more water used and wastewater generated, the more likely that pollutants transported by this water will reach the drainage system or be transported off site.

- What are the site conditions? BMPs may differ depending on whether the activity is conducted on a slope or flat ground near a drainage structure or watercourse. Conducting activities away from certain sensitive areas will reduce the cost and inconvenience of implementing BMPs.

- What about accidents? Controls for common activities should be established, and preparations should be made to allow for quick response to accidents or spills. In the event of a spill or exposure of construction compounds, what are the contingency plans for sampling the contaminated stormwater? Can the analysis be done in the field or should laboratory analysis be required? Are sample bottles available on-site, appropriate test strips, etc?

2.5 Stormwater Pollution Prevention Plans

2.5.1 SWPPP Preparation

The General Permit requires that the owner prepare a SWPPP for projects that will create one acre or more of soil disturbance. The General Permit also requires that the SWPPP applies to all areas that are directly related to the construction activity, including but not limited to staging areas, storage yards, material borrow areas, and access roads, etc. In some cases, the owner may enter into agreements with the contractor or stormwater quality professionals for preparation and implementation of the SWPPP. However, owners must be aware that regardless of the contractual agreement between the owner and contractor with respect to BMP selections and SWPPP implementation, the owner is ultimately responsible for compliance with the General Permit. It is highly recommended that the owner and contractor jointly review the SWPPP during its development or during a pre-construction conference.

The SWPPP is a document that addresses water pollution control during construction. The SWPPP must be prepared and available on the project site before the project owner, developer, or contractor begins any activity with the potential to cause water pollution. The SWPPP must be available on site at all times and must be implemented year-round throughout the duration of the construction project.

The SWPPP must be completed before any construction activity starts. No construction activity having the potential to cause water pollution shall be performed until the SWPPP has been completed, certified, and appropriate BMPs have been implemented. Construction activities that will not threaten water quality, such as traffic control, may proceed without a complete SWPPP if allowed by the local agency and the RWQCB.

The SWPPP should be directed at personnel on the construction project (e.g., supervisor, foreman, and inspectors). The SWPPP should provide specific guidance on actions to be taken by these personnel and should be presented in a format that accommodates day-to-day use (e.g., loose leaf, pullout sections, and checklists).

The SWPPP should provide a simple narrative and diagram that locates the construction site, identifies potential pollutant sources on site, and shows the location of the BMPs to be used to minimize erosion and sedimentation during construction. It should also describe measures which eliminate or reduce pollution of stormwater runoff by any chemicals and materials used during the construction process. The level of detail will vary with the intensity, size, and type of construction.

2.5.2 SWPPP Template

An electronic SWPPP template has been developed and is included in Appendix A of this handbook as an assistance tool. The template contains the elements required by the General Permit, but local agencies may develop their own SWPPP template or require an alternative format. It is important to note that a SWPPP does not need to match the template provided. The template SWPPP is provided as a guidance document that was developed to:

- Provide easy data entry during SWPPP preparation (instructions and examples can be viewed in the template while the SWPPP is being prepared)
- Provide consistency in SWPPP content and format, thus making the SWPPP review process more efficient

An electronic copy of the SWPPP template (Microsoft Word® 2000) can be downloaded from the California Stormwater BMP Handbook web site at "www.cabmphandbooks.com." Due to the SWPPP template objectives for consistency in SWPPP content and format, the SWPPP template's underlying structure cannot be modified by the user.

2.6 SWPPP Implementation

2.6.1 Staff Training

Training is imperative to the success of the BMPs identified in the SWPPP. Adequate training is required if these BMPs are to be installed and maintained properly. These BMPs will fail if not properly installed and maintained. Thus, only trained personnel should be assigned these responsibilities. A construction stormwater pollution prevention training program should be held for all construction personnel. A good program will include:

- SWPPP Preparation Training. This training is geared towards owners, engineers, contractors, and water quality professionals involved in preparation and certification of SWPPPs. The training must cover all aspects of construction site water pollution control, including, SWPPP documentation and BMP selection.
- SWPPP Implementation Training. This training is geared towards owners, contractors, superintendents, foremen, and key staff designated in the SWPPP as being responsible for

certifications, inspections, monitoring, and project oversight. The first training element must familiarize the individuals with the content and organization of the SWPPP, pollution control objectives, responsibilities for pollution control, BMPs, inspection procedures, and monitoring procedures. The second training element must focus on the SWPPP for the particular project site for which the individual is responsible, including site-specific responsibilities, BMPs, and other measures.

- BMP Implementation Training. This training is geared towards owners, contractors, superintendents, foremen, tradesmen, laborers, and for other staff that work on the construction site including subcontractors. The training should cover responsibilities for BMP implementation, how to implement BMPs, general good housekeeping, and protection of BMPs in place.

Construction water pollution control training typically includes off-site and on-site training. Off-site training is most appropriate for SWPPP Preparation training with instruction provided by trade associations, colleges, Regional Boards, County, or other water quality professionals. SWPPP Implementation training can be conducted through a combination of off-site training for the general subjects, and on-site training for a site specific SWPPP, with instruction provided by trade associations, colleges, Regional Boards, Counties, water quality professionals, and experienced owner and contractor superintendents. BMP implementation training is usually conducted on the project site with instruction provided by experienced owner and contractors' superintendents and foremen.

Subcontractor employees can impact water quality and potentially jeopardize compliance with the General Permit, thus subcontractor staff must also receive appropriate training. The owner may wish to contractually require that subcontractors employ trained staff.

2.6.2 Site Inspections

The General Permit requires inspections before and after a storm event, and once each 24-hour period during extended storm events, to identify BMP effectiveness and implement repairs or BMP changes as soon as feasible. At the onset of a construction project (e.g., clearing, grubbing, or earth movement) it may be more appropriate to perform inspection of the BMPs on a regular basis instead of just before and after a storm. This will allow sufficient time for any corrections or improvements to be made before the storm. An inspector should be identified in the SWPPP. Inspection can usually be performed as part of a regular oversight and inspection of the project site.

According to the General Permit, a tracking or follow-up procedure must follow an inspection that identifies deficiencies in the BMPs. The result of the inspection and assessment must be written. Include the date of the inspection, weather information, the person(s) who performed the inspection, observations, descriptions of inadequate BMPs, and the corrective actions that were taken, such as BMPs that were fixed or additional BMPs that were implemented. Inspection records must be retained for three years from the date they were generated. It is highly recommended that records be retained for at least three years following the date coverage is terminated under the General Permit; even longer retention of records is recommended where

sites have been subject to enforcement actions or are involved in litigation regarding issues covered by the permit.

2.6.3 BMP Monitoring

The type of BMP monitoring depends on which BMP is implemented. In the case of contractor activity BMPs, the monitoring consists of visual inspection to ensure that the BMP was implemented and maintained according to the SWPPP. Such inspection would include:

- Looking for evidence of spills and resulting clean-up procedures (e.g., supplies of spill cleanup materials)
- Verifying adequacy of trash receptacles
- Verifying waste disposal practices (e.g., recycle vs. hazardous waste bins)
- Examining integrity and use of containment structures
- Verifying use of employee education programs for the various activities
- Noting the location of activity (e.g., outdoor vs. indoor, concrete vs. grass)
- BMPs for any chemicals or fuels not addressed in the SWPPP must be developed

In the case of erosion and sediment control BMPs, the monitoring program should consist of regular inspection to determine the following:

- Are erosion and sediment control BMPs installed properly? The SWPPP BMPs should include details or references to allow for the proper construction of structural or vegetative erosion and sediment control devices. The inspector should ensure that these systems are installed according to the SWPPP in the proper locations
- Are the BMPs effective? The effectiveness of the BMP would be based on the presence of sediment behind or within control devices, the presence of sediment downstream of the site, and signs of erosion in stabilized areas after a storm event.
- Have drainage patterns changed? If the site has undergone significant grading operations, resulting in a change of drainage patterns, adjustment to the BMPs will likely be required to address this change. The inspector shall determine the extent of changes to the drainage pattern and the necessity for additional or reconfigured BMPs.
- Are areas stabilized as quickly as possible after completion of construction activities in an area? Disturbed active and inactive construction areas (inactive construction areas may be defined as areas in which no construction activity will occur for a period of 30 days or longer) should be stabilized as soon as practical. If construction, climatological, or other site conditions do not allow stabilization, the SWPPP should define alternative approaches.

- Are the BMPs properly maintained? Maintenance of erosion and sediment control BMPs is critical. Erosion controls should be installed as soon as practical after an area becomes inactive, and before the onset of rain. The capacity of sediment controls must be restored prior to the next rain event.

2.6.4 BMP Maintenance

The inspector should inspect the site on a regular basis, during and after any storm generating runoff to determine maintenance requirements and general condition of the installed system. The local agency may also inspect the site on a routine basis to assess the maintenance performed on the systems. All maintenance related to a storm event should be completed within 48 hours of the storm event. The following maintenance tasks should be performed on a regular basis:

- Removal of sediment from barriers and sedimentation devices
- Replacement or repair of worn or damaged silt fence fabrics
- Replacement or repair of damaged structural controls
- Repair of damaged soil stabilization measures.
- Other control maintenance as defined in each BMP fact sheet.

2.6.5 Stormwater Pollution Control Documentation

Records of inspections, compliance certifications, and non-compliance reporting are to be retained for at least three years by the owner. It is suggested that records of incidents such as spills or other releases be kept. Analyzing a history of this information can provide insight into modifying the BMPs. Photographs should also be kept.

Also, keep a record of maintenance activities or any other BMPs that are of an action nature. Activity based BMPs such as Good Housekeeping must be documented in each inspection; often, this documentation is the only evidence that the BMPs have been implemented.

Section 3
Erosion and Sediment Control BMPs

3.1 Erosion Control

Erosion control is any source control practice that protects the soil surface and prevents soil particles from being detached by rainfall, flowing water, or wind. Erosion control is also referred to as soil stabilization. Erosion control consists of preparing the soil surface and implementing one or more of the BMPs shown in Table 3-1, to disturbed soil areas.

Table 3-1 Erosion Control BMPs

BMP#	BMP Name
EC-1	Scheduling
EC-2	Preservation of Existing Vegetation
EC-3	Hydraulic Mulch
EC-4	Hydroseeding
EC-5	Soil Binders
EC-6	Straw Mulch
EC-7	Geotextiles & Mats
EC-8	Wood Mulching
EC-9	Earth Dikes and Drainage Swales
EC-10	Velocity Dissipation Devices
EC-11	Slope Drains
EC-12	Streambank Stabilization
EC-13	Polyacrylamide

All inactive soil-disturbed areas on the project site, and most active areas prior to the onset of rain, must be protected from erosion. Soil disturbed areas may include relatively flat areas as well as slopes. Typically, steep slopes and large exposed areas require the most robust erosion controls; flatter slopes and smaller areas still require protection, but less costly materials may be appropriate for these areas, allowing savings to be directed to the more robust BMPs for steep slopes and large exposed areas. To be effective, erosion control BMPs must be implemented at slopes and disturbed areas to protect them from concentrated flows.

Some erosion control BMPs can be used effectively to temporarily prevent erosion by concentrated flows. These BMPs, used alone or in combination, prevent erosion by intercepting, diverting, conveying, and discharging concentrated flows in a manner that prevents soil detachment and transport. Temporary concentrated flow conveyance controls may be required to direct run-on around or through the project in a non-erodible fashion. Temporary concentrated flow conveyance controls include the following BMPs:

- EC-9, Earth Dikes and Drainage Swales
- EC-10, Velocity Dissipation Devices
- EC-11, Slope Drains

3.2 Sediment Control

Sediment control is any practice that traps soil particles after they have been detached and moved by rain, flowing water, or wind. Sediment control measures are usually passive systems that rely on filtering or settling the particles out of the water or wind that is transporting them.

Sediment control practices include the BMPs listed in Table 3-2.

Table 3-2 Temporary Sediment Control BMPs

BMP#	BMP Name
SE-1	Silt Fence
SE-2	Sediment Basin
SE-3	Sediment Trap
SE-4	Check Dam
SE-5	Fiber Rolls
SE-6	Gravel Bag Berm
SE-7	Street Sweeping and Vacuuming
SE-8	Sandbag Barrier
SE-9	Straw Bale Barrier
SE-10	Storm Drain Inlet Protection
SE-11	Chemical Treatment

Sediment control BMPs include those practices that intercept and slow or detain the flow of stormwater to allow sediment to settle and be trapped. Sediment control practices can consist of installing linear sediment barriers (such as silt fence, sandbag barrier, and straw bale barrier); providing fiber rolls, gravel bag berms, or check dams to break up slope length or flow; or constructing a sediment trap or sediment basin. Linear sediment barriers are typically placed below the toe of exposed and erodible slopes, down-slope of exposed soil areas, around soil stockpiles, and at other appropriate locations along the site perimeter.

A few BMPs may control both sediment and erosion, for example, fiber rolls and sand bag barriers. The authors of this handbook have classified these BMPs as either erosion control (EC) or sediment control (SC) based on the authors opinion on the BMPs most common and effective use.

Sediment control BMPs are most effective when used in conjunction with erosion control BMPs. The combination of erosion control and sediment control is usually the most effective means to prevent sediment from leaving the project site and potentially entering storm drains or receiving waters. Under most conditions, the General Permit requires that the discharger implement an effective combination of erosion and sediment controls.

Under limited circumstances, sediment control, alone may be appropriate. For example, applying erosion control BMPs to an area where excavation, filling, compaction, or grading is currently under way may not be feasible when storms come unexpectedly. Use of sediment controls by establishing perimeter control on these areas may be appropriate and allowable under the General Permit provided the following conditions are met.

- Weather monitoring is under way.
- Inactive soil-disturbed areas have been protected with an effective combination of erosion and sediment controls.

- An adequate supply of sediment control materials are stored on-site and there are sufficient forces of labor and equipment available to implement sediment controls on the active area prior to the onset of rain.

- The SWPPP adequately describes the methods to protect active areas.

3.3 Wind Erosion Control

Wind erosion control consists of applying water or other dust palliatives to prevent or alleviate dust nuisance. Wind erosion control best management practices (BMPs) are shown in Table 3-3.

Table 3-3 Wind Erosion Control BMPs

BMP#	BMP Name
WE-1	Wind Erosion Control

Other BMPs that are sometimes applied to disturbed soil areas in order to control wind erosion are BMPs EC-2 through EC-7, shown in Section 3.1 of this Manual. Be advised that many of the dust palliatives may contain compounds that have an unknown effect on stormwater. A sampling and analysis protocol to test for stormwater contamination from exposure to such compounds is required in the SWPPP.

3.4 Tracking Control BMPs

Tracking control consists of preventing or reducing the tracking of sediment off-site by vehicles leaving the construction area. Tracking control best management practices (BMPs) are shown in Table 3-4.

Table 3-4 Temporary Tracking Control BMPs

BMP #	BMP Name
TR-1	Stabilized Construction Entrance/ Exit
TR-2	Stabilized Construction Roadway
TR-3	Entrance/Outlet Tire Wash

Attention to control of tracking sediment off site is highly recommended, as dirty streets and roads near a construction site create a nuisance to the public and generate constituent complaints to elected officials and regulators. These complaints often result in immediate inspections and regulatory actions.

3.5 Erosion and Sediment Control BMP Fact Sheet Format

A BMP fact sheet is a short document that gives all the information about a particular BMP. Typically, each fact sheet contains the information outlined in Figure 3-1. Completed fact sheets for each of the above activities are provided in Section 3.6.

The fact sheets also contain side bar presentations with information on BMP objectives, targeted constituents, removal effectiveness, and potential alternatives.

EC-xx Example Fact Sheet

Description and Purpose
Suitable Applications
Limitations
Implementation
Costs
Inspection and Maintenance
References

Figure 3-1
Example Fact Sheet

3.6 BMP Fact Sheets

BMP fact sheets for erosion, sediment, wind, and tracking controls follow. The BMP fact sheets are individually page numbered and are suitable for photocopying and inclusion in SWPPPs. Fresh copies of the fact sheets can be individually downloaded from the California Stormwater BMP Handbook web site at www.cabmphandbooks.com.

Scheduling EC-1

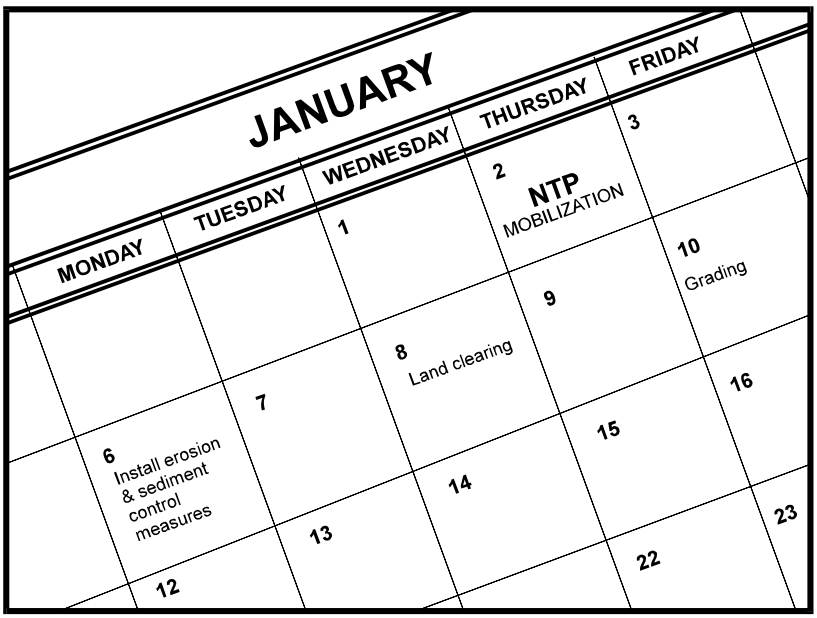

Objectives

EC	Erosion Control	☑
SE	Sediment Control	☒
TR	Tracking Control	☒
WE	Wind Erosion Control	☒
NS	Non-Stormwater Management Control	
WM	Waste Management and Materials Pollution Control	

Legend:

☑ **Primary Objective**

☒ **Secondary Objective**

Targeted Constituents

Sediment	☑
Nutrients	
Trash	
Metals	
Bacteria	
Oil and Grease	
Organics	

Potential Alternatives

None

Description and Purpose

Scheduling is the development of a written plan that includes sequencing of construction activities and the implementation of BMPs such as erosion control and sediment control while taking local climate (rainfall, wind, etc.) into consideration. The purpose is to reduce the amount and duration of soil exposed to erosion by wind, rain, runoff, and vehicle tracking, and to perform the construction activities and control practices in accordance with the planned schedule.

Suitable Applications

Proper sequencing of construction activities to reduce erosion potential should be incorporated into the schedule of every construction project especially during rainy season. Use of other, more costly yet less effective, erosion and sediment control BMPs may often be reduced through proper construction sequencing.

Limitations

- Environmental constraints such as nesting season prohibitions reduce the full capabilities of this BMP.

Implementation

- Avoid rainy periods. Schedule major grading operations during dry months when practical. Allow enough time before rainfall begins to stabilize the soil with vegetation or physical means or to install sediment trapping devices.

- Plan the project and develop a schedule showing each phase of construction. Clearly show how the rainy season relates to soil

disturbing and re-stabilization activities. Incorporate the construction schedule into the SWPPP.

- Include on the schedule, details on the rainy season implementation and deployment of:
  - Erosion control BMPs
  - Sediment control BMPs
  - Tracking control BMPs
  - Wind erosion control BMPs
  - Non-stormwater BMPs
  - Waste management and materials pollution control BMPs
- Include dates for activities that may require non-stormwater discharges such as dewatering, sawcutting, grinding, drilling, boring, crushing, blasting, painting, hydro-demolition, mortar mixing, pavement cleaning, etc.
- Work out the sequencing and timetable for the start and completion of each item such as site clearing and grubbing, grading, excavation, paving, foundation pouring utilities installation, etc., to minimize the active construction area during the rainy season.
  - Sequence trenching activities so that most open portions are closed before new trenching begins.
  - Incorporate staged seeding and re-vegetation of graded slopes as work progresses.
  - Schedule establishment of permanent vegetation during appropriate planting time for specified vegetation.
- Non-active areas should be stabilized as soon as practical after the cessation of soil disturbing activities or one day prior to the onset of precipitation.
- Monitor the weather forecast for rainfall.
- When rainfall is predicted, adjust the construction schedule to allow the implementation of soil stabilization and sediment treatment controls on all disturbed areas prior to the onset of rain.
- Be prepared year round to deploy erosion control and sediment control BMPs. Erosion may be caused during dry seasons by un-seasonal rainfall, wind, and vehicle tracking. Keep the site stabilized year round, and retain and maintain rainy season sediment trapping devices in operational condition.
- Apply permanent erosion control to areas deemed substantially complete during the project's defined seeding window.

Costs

Construction scheduling to reduce erosion may increase other construction costs due to reduced economies of scale in performing site grading. The cost effectiveness of scheduling techniques should be compared with the other less effective erosion and sedimentation controls to achieve a cost effective balance.

Inspection and Maintenance

- Verify that work is progressing in accordance with the schedule. If progress deviates, take corrective actions.
- Amend the schedule when changes are warranted.
- Amend the schedule prior to the rainy season to show updated information on the deployment and implementation of construction site BMPs.

References

Stormwater Quality Handbooks Construction Site Best Management Practices (BMPs) Manual, State of California Department of Transportation (Caltrans), November 2000.

Stormwater Management for Construction Activities Developing Pollution Prevention Plans and Best Management Practices (EPA 832-R-92-005), U.S. Environmental Protection Agency, Office of Water, September 1992.

Preservation Of Existing Vegetation EC-2

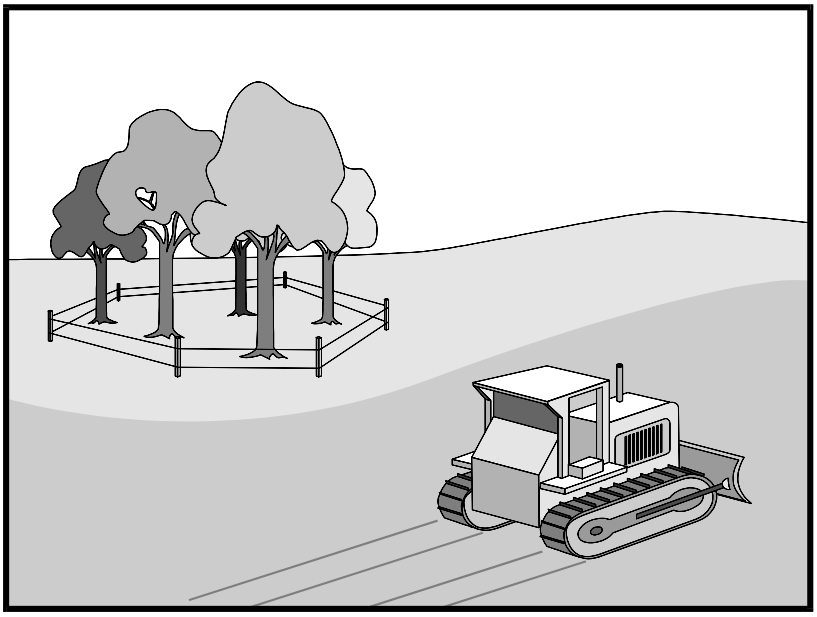

Objectives

EC	Erosion Control	☑
SE	Sediment Control	
TR	Tracking Control	
WE	Wind Erosion Control	
NS	Non-Stormwater Management Control	
WM	Waste Management and Materials Pollution Control	

Legend:

☑ **Primary Objective**

☒ **Secondary Objective**

Targeted Constituents

Sediment	☑
Nutrients	
Trash	
Metals	
Bacteria	
Oil and Grease	
Organics	

Potential Alternatives

None

Description and Purpose

Carefully planned preservation of existing vegetation minimizes the potential of removing or injuring existing trees, vines, shrubs, and grasses that protect soil from erosion.

Suitable Applications

Preservation of existing vegetation is suitable for use on most projects. Large project sites often provide the greatest opportunity for use of this BMP. Suitable applications include the following:

- Areas within the site where no construction activity occurs, or occurs at a later date. This BMP is especially suitable to multi year projects where grading can be phased.
- Areas where natural vegetation exists and is designated for preservation. Such areas often include steep slopes, watercourse, and building sites in wooded areas.
- Areas where local, state, and federal government require preservation, such as vernal pools, wetlands, marshes, certain oak trees, etc. These areas are usually designated on the plans, or in the specifications, permits, or environmental documents.
- Where vegetation designated for ultimate removal can be temporarily preserved and be utilized for erosion control and sediment control.

EC-2 Preservation Of Existing Vegetation

Limitations

- Requires forward planning by the owner/developer, contractor, and design staff.
- Limited opportunities for use when project plans do not incorporate existing vegetation into the site design.
- For sites with diverse topography, it is often difficult and expensive to save existing trees while grading the site satisfactory for the planned development.

Implementation

The best way to prevent erosion is to not disturb the land. In order to reduce the impacts of new development and redevelopment, projects may be designed to avoid disturbing land in sensitive areas of the site (e.g., natural watercourses, steep slopes), and to incorporate unique or desirable existing vegetation into the site's landscaping plan. Clearly marking and leaving a buffer area around these unique areas during construction will help to preserve these areas as well as take advantage of natural erosion prevention and sediment trapping.

Existing vegetation to be preserved on the site must be protected from mechanical and other injury while the land is being developed. The purpose of protecting existing vegetation is to ensure the survival of desirable vegetation for shade, beautification, and erosion control. Mature vegetation has extensive root systems that help to hold soil in place, thus reducing erosion. In addition, vegetation helps keep soil from drying rapidly and becoming susceptible to erosion. To effectively save existing vegetation, no disturbances of any kind should be allowed within a defined area around the vegetation. For trees, no construction activity should occur within the drip line of the tree.

Timing

- Provide for preservation of existing vegetation prior to the commencement of clearing and grubbing operations or other soil disturbing activities in areas where no construction activity is planned or will occur at a later date.

Design and Layout

- Mark areas to be preserved with temporary fencing. Include sufficient setback to protect roots.
  - Orange colored plastic mesh fencing works well.
  - Use appropriate fence posts and adequate post spacing and depth to completely support the fence in an upright position.
- Locate temporary roadways, stockpiles, and layout areas to avoid stands of trees, shrubs, and grass.
- Consider the impact of grade changes to existing vegetation and the root zone.
- Maintain existing irrigation systems where feasible. Temporary irrigation may be required.
- Instruct employees and subcontractors to honor protective devices. Prohibit heavy equipment, vehicular traffic, or storage of construction materials within the protected area.

Costs

There is little cost associated with preserving existing vegetation if properly planned during the project design, and these costs may be offset by aesthetic benefits that enhance property values. During construction, the cost for preserving existing vegetation will likely be less than the cost of applying erosion and sediment controls to the disturbed area. Replacing vegetation inadvertently destroyed during construction can be extremely expensive, sometimes in excess of $10,000 per tree.

Inspection and Maintenance

During construction, the limits of disturbance should remain clearly marked at all times. Irrigation or maintenance of existing vegetation should be described in the landscaping plan. If damage to protected trees still occurs, maintenance guidelines described below should be followed:

- Verify that protective measures remain in place. Restore damaged protection measures immediately.
- Serious tree injuries shall be attended to by an arborist.
- Damage to the crown, trunk, or root system of a retained tree shall be repaired immediately.
- Trench as far from tree trunks as possible, usually outside of the tree drip line or canopy. Curve trenches around trees to avoid large roots or root concentrations. If roots are encountered, consider tunneling under them. When trenching or tunneling near or under trees to be retained, place tunnels at least 18 in. below the ground surface, and not below the tree center to minimize impact on the roots.
- Do not leave tree roots exposed to air. Cover exposed roots with soil as soon as possible. If soil covering is not practical, protect exposed roots with wet burlap or peat moss until the tunnel or trench is ready for backfill.
- Cleanly remove the ends of damaged roots with a smooth cut.
- Fill trenches and tunnels as soon as possible. Careful filling and tamping will eliminate air spaces in the soil, which can damage roots.
- If bark damage occurs, cut back all loosened bark into the undamaged area, with the cut tapered at the top and bottom and drainage provided at the base of the wood. Limit cutting the undamaged area as much as possible.
- Aerate soil that has been compacted over a trees root zone by punching holes 12 in. deep with an iron bar, and moving the bar back and forth until the soil is loosened. Place holes 18 in. apart throughout the area of compacted soil under the tree crown.
- Fertilization
  - Fertilize stressed or damaged broadleaf trees to aid recovery.
  - Fertilize trees in the late fall or early spring.

- Apply fertilizer to the soil over the feeder roots and in accordance with label instructions, but never closer than 3 ft to the trunk. Increase the fertilized area by one-fourth of the crown area for conifers that have extended root systems.

- Retain protective measures until all other construction activity is complete to avoid damage during site cleanup and stabilization.

References

County of Sacramento Tree Preservation Ordinance, September 1981.

Stormwater Quality Handbooks Construction Site Best Management Practices (BMPs) Manual, State of California Department of Transportation (Caltrans), November 2000.

Stormwater Management of the Puget Sound Basin, Technical Manual, Publication #91-75, Washington State Department of Ecology, February 1992.

Water Quality Management Plan for The Lake Tahoe Region, Volume II, Handbook of Management Practices, Tahoe Regional Planning Agency, November 1988.

Hydraulic Mulch EC-3

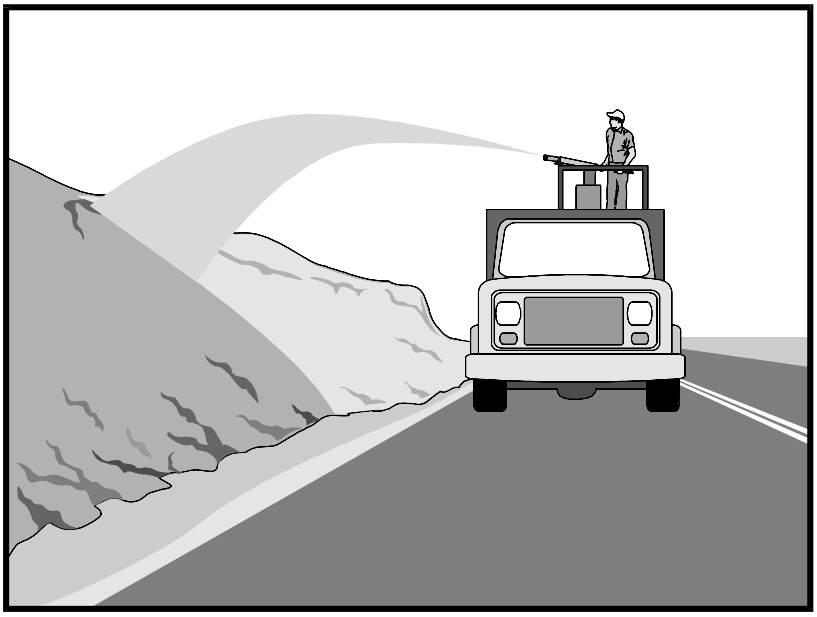

Objectives

EC	Erosion Control	☑
SE	Sediment Control	
TR	Tracking Control	
WE	Wind Erosion Control	☒
NS	Non-Stormwater Management Control	
WM	Waste Management and Materials Pollution Control	

Legend:

☑ **Primary Objective**

☒ **Secondary Objective**

Targeted Constituents

Sediment	☑
Nutrients	
Trash	
Metals	
Bacteria	
Oil and Grease	
Organics	

Potential Alternatives

EC-4 Hydroseeding

EC-5 Soil Binders

EC-6 Straw Mulch

EC-7 Geotextiles and Mats

EC-8 Wood Mulching

Description and Purpose

Hydraulic mulch consists of applying a mixture of shredded wood fiber or a hydraulic matrix, and a stabilizing emulsion or tackifier with hydro-mulching equipment, which temporarily protects exposed soil from erosion by raindrop impact or wind.

Suitable Applications

Hydraulic mulch is suitable for soil disturbed areas requiring temporary protection until permanent stabilization is established, and disturbed areas that will be re-disturbed following an extended period of inactivity.

Limitations

Wood fiber hydraulic mulches are generally short lived and need 24 hours to dry before rainfall occurs to be effective. May require a second application in order to remain effective for an entire rainy season.

Implementation

- Prior to application, roughen embankment and fill areas by rolling with a crimping or punching type roller or by track walking. Track walking shall only be used where other methods are impractical.
- To be effective, hydraulic matrices require 24 hours to dry before rainfall occurs.
- Avoid mulch over spray onto roads, sidewalks, drainage channels, existing vegetation, etc.

CASQA
CALIFORNIA STORMWATER QUALITY ASSOCIATION

- Paper based hydraulic mulches alone shall not be used for erosion control.

Hydraulic Mulches

Wood fiber mulch can be applied alone or as a component of hydraulic matrices. Wood fiber applied alone is typically applied at the rate of 2,000 to 4,000 lb/acre. Wood fiber mulch is manufactured from wood or wood waste from lumber mills or from urban sources.

Hydraulic Matrices

Hydraulic matrices include a mixture of wood fiber and acrylic polymer or other tackifier as binder. Apply as a liquid slurry using a hydraulic application machine (i.e., hydro seeder) at the following minimum rates, or as specified by the manufacturer to achieve complete coverage of the target area: 2,000 to 4,000 lb/acre wood fiber mulch, and 5 to 10% (by weight) of tackifier (acrylic copolymer, guar, psyllium, etc.)

Bonded Fiber Matrix

Bonded fiber matrix (BFM) is a hydraulically applied system of fibers and adhesives that upon drying forms an erosion resistant blanket that promotes vegetation, and prevents soil erosion. BFMs are typically applied at rates from 3,000 lb/acre to 4,000 lb/acre based on the manufacturer's recommendation. A biodegradable BFM is composed of materials that are 100% biodegradable. The binder in the BFM should also be biodegradable and should not dissolve or disperse upon re-wetting. Typically, biodegradable BFMs should not be applied immediately before, during or immediately after rainfall if the soil is saturated. Depending on the product, BFMs typically require 12 to 24 hours to dry and become effective.

Costs

Average cost for installation of wood fiber mulch is $900/acre. Average cost for installation of BFM is $5,500/acre.

Inspection and Maintenance

- Inspect BMPs prior to forecast rain, daily during extended rain events, after rain events, weekly during the rainy season, and at two-week intervals during the non-rainy season.

- Areas where erosion is evident shall be repaired and BMPs re-applied as soon as possible. Care should be exercised to minimize the damage to protected areas while making repairs, as any area damaged will require re-application of BMPs.

- Maintain an unbroken, temporary mulched ground cover throughout the period of construction when the soils are not being reworked.

References

Controlling Erosion of Construction Sites Agricultural Information #347, U.S. Department of Agriculture (USDA), Natural Resources Conservation Service (NRCS) (formerly Soil Conservation Service – SCS).

Guides for Erosion and Sediment Control in California, USDA Soils Conservation Service, January 1991.

Manual of Standards of Erosion and Sediment Control Measures, Association of Bay Area Governments, May 1995.

Sedimentation and Erosion Control, An Inventory of Current Practices Draft, US EPA, April 1990.

Soil Erosion by Water, Agriculture Information Bulletin #513, U.S. Department of Agriculture, Soil Conservation Service.

Stormwater Quality Handbooks Construction Site Best Management Practices (BMPs) Manual, State of California Department of Transportation (Caltrans), November 2000.

Guidance Document: Soil Stabilization for Temporary Slopes, State of California Department of Transportation (Caltrans), November 1999

Stormwater Management of the Puget Sound Basin, Technical Manual, Publication #91-75, Washington State Department of Ecology, February 1992.

Water Quality Management Plan for the Lake Tahoe Region, Volume II, Handbook of Management Practices, Tahoe Regional Planning Agency, November 1988.

Hydroseeding EC-4

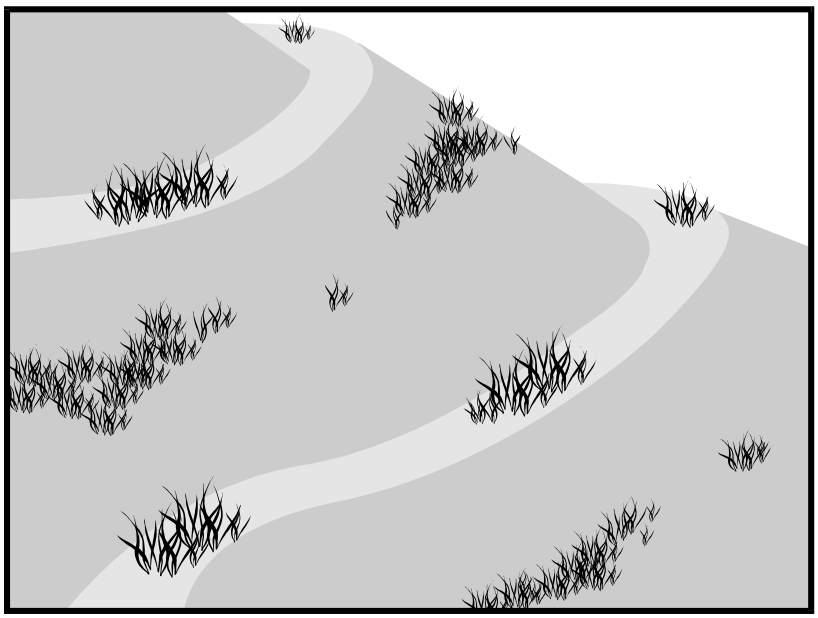

Objectives

EC	Erosion Control	☑
SE	Sediment Control	
TR	Tracking Control	
WE	Wind Erosion Control	☒
NS	Non-Stormwater Management Control	
WM	Waste Management and Materials Pollution Control	

Legend:

☑ **Primary Objective**

☒ **Secondary Objective**

Targeted Constituents

Sediment	☑
Nutrients	
Trash	
Metals	
Bacteria	
Oil and Grease	
Organics	

Potential Alternatives

EC-3 Hydraulic Mulch

EC-5 Soil Binders

EC-6 Straw Mulch

EC-7 Geotextiles and Mats

EC-8 Wood Mulching

Description and Purpose

Hydroseeding typically consists of applying a mixture of wood fiber, seed, fertilizer, and stabilizing emulsion with hydro-mulch equipment, to temporarily protect exposed soils from erosion by water and wind.

Suitable Applications

Hydroseeding is suitable for soil disturbed areas requiring temporary protection until permanent stabilization is established, and disturbed areas that will be re-disturbed following an extended period of inactivity.

Limitations

- Hydroseeding may be used alone only when there is sufficient time in the season to ensure adequate vegetation establishment and coverage to provide adequate erosion control. Otherwise, hydroseeding must be used in conjunction with mulching (i.e., straw mulch).
- Steep slopes are difficult to protect with temporary seeding.
- Temporary seeding may not be appropriate in dry periods without supplemental irrigation.
- Temporary vegetation may have to be removed before permanent vegetation is applied.
- Temporary vegetation is not appropriate for short term inactivity.

CASQA
CALIFORNIA STORMWATER QUALITY ASSOCIATION

Implementation

In order to select appropriate hydroseeding mixtures, an evaluation of site conditions shall be performed with respect to:

- Soil conditions
- Site topography
- Season and climate
- Vegetation types
- Maintenance requirements
- Sensitive adjacent areas
- Water availability
- Plans for permanent vegetation

The local office of the U.S.D.A. Natural Resources Conservation Service (NRCS) is an excellent source of information on appropriate seed mixes.

The following steps shall be followed for implementation:

- Avoid use of hydroseeding in areas where the BMP would be incompatible with future earthwork activities and would have to be removed.
- Hydroseeding can be accomplished using a multiple step or one step process. The multiple step process ensures maximum direct contact of the seeds to soil. When the one step process is used to apply the mixture of fiber, seed, etc., the seed rate shall be increased to compensate for all seeds not having direct contact with the soil.
- Prior to application, roughen the area to be seeded with the furrows trending along the contours.
- Apply a straw mulch to keep seeds in place and to moderate soil moisture and temperature until the seeds germinate and grow.
- All seeds shall be in conformance with the California State Seed Law of the Department of Agriculture. Each seed bag shall be delivered to the site sealed and clearly marked as to species, purity, percent germination, dealer's guarantee, and dates of test. The container shall be labeled to clearly reflect the amount of Pure Live Seed (PLS) contained. All legume seed shall be pellet inoculated. Inoculant sources shall be species specific and shall be applied at a rate of 2 lb of inoculant per 100 lb seed.
- Commercial fertilizer shall conform to the requirements of the California Food and Agricultural Code. Fertilizer shall be pelleted or granular form.
- Follow up applications shall be made as needed to cover weak spots and to maintain adequate soil protection.
- Avoid over spray onto roads, sidewalks, drainage channels, existing vegetation, etc.

Costs

Average cost for installation and maintenance may vary from as low as $300 per acre for flat slopes and stable soils, to $1600 per acre for moderate to steep slopes and/or erosive soils.

Hydroseeding		Installed Cost per Acre
High Density	Ornamentals	$400 - $1600
	Turf Species	$350
	Bunch Grasses	$300 - $1300
Fast Growing	Annual	$350 - $650
	Perennial	$300 - $800
Non-Competing	Native	$300 - $1600
	Non-Native	$400 - $500
Sterile	Cereal Grain	$500

Source: Caltrans Guidance for Soil Stabilization for Temporary Slopes, Nov. 1999

Inspection and Maintenance

- Inspect BMPs prior to forecast rain, daily during extended rain events, after rain events, weekly during the rainy season, and at two-week intervals during the non-rainy season.
- Areas where erosion is evident shall be repaired and BMPs re-applied as soon as possible. Care should be exercised to minimize the damage to protected areas while making repairs, as any area damaged will require re-application of BMPs.
- Where seeds fail to germinate, or they germinate and die, the area must be re-seeded, fertilized, and mulched within the planting season, using not less than half the original application rates.
- Irrigation systems, if applicable, should be inspected daily while in use to identify system malfunctions and line breaks. When line breaks are detected, the system must be shut down immediately and breaks repaired before the system is put back into operation.
- Irrigation systems shall be inspected for complete coverage and adjusted as needed to maintain complete coverage.

References

Stormwater Quality Handbooks Construction Site Best Management Practices (BMPs) Manual, State of California Department of Transportation (Caltrans), November 2000.

Guidance Document: Soil Stabilization for Temporary Slopes, State of California Department of Transportation (Caltrans), November 1999.

Soil Binders EC-5

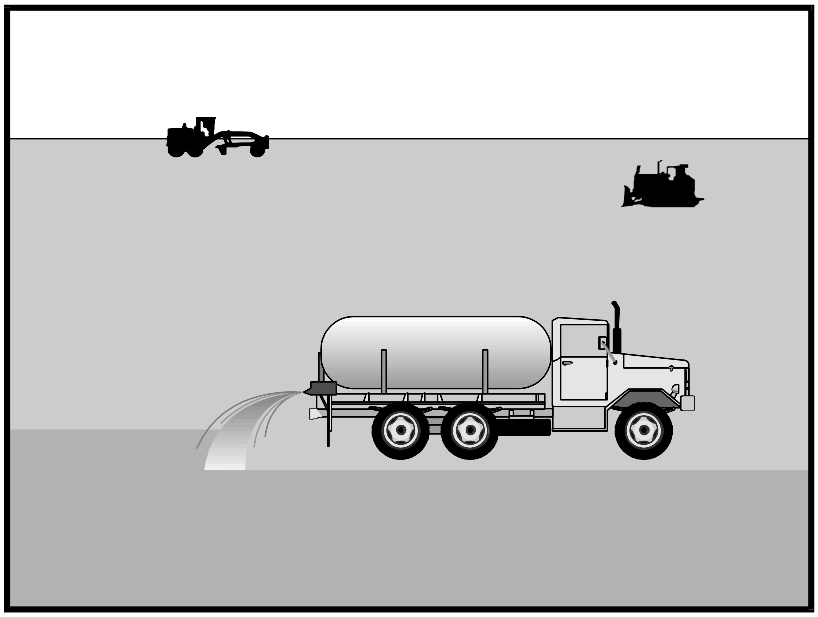

Objectives

EC	Erosion Control	☑
SE	Sediment Control	
TR	Tracking Control	
WE	Wind Erosion Control	☒
NS	Non-Stormwater Management Control	
WM	Waste Management and Materials Pollution Control	

Legend:

☑ **Primary Objective**

☒ **Secondary Objective**

Targeted Constituents

Sediment	☑
Nutrients	
Trash	
Metals	
Bacteria	
Oil and Grease	
Organics	

Potential Alternatives

EC-3 Hydraulic Mulch

EC-4 Hydroseeding

EC-6 Straw Mulch

EC-7 Geotextiles and Mats

EC-8 Wood Mulching

Description and Purpose

Soil binders consist of applying and maintaining a soil stabilizer to exposed soil surfaces. Soil binders are materials applied to the soil surface to temporarily prevent water induced erosion of exposed soils on construction sites. Soil binders also prevent wind erosion.

Suitable Applications

Soil binders are typically applied to disturbed areas requiring short term temporary protection. Because soil binders can often be incorporated into the work, they are a good alternative to mulches in areas where grading activities will soon resume. Soil binders are also suitable for use on stockpiles.

Limitations

- Soil binders are temporary in nature and may need reapplication.
- Soil binders require a minimum curing time until fully effective, as prescribed by the manufacturer. Curing time may be 24 hours or longer. Soil binders may need reapplication after a storm event.
- Soil binders will generally experience spot failures during heavy rainfall events. If runoff penetrates the soil at the top of a slope treated with a soil binder, it is likely that the runoff will undercut the stabilized soil layer and discharge at a point further down slope.

CASQA
CALIFORNIA STORMWATER QUALITY ASSOCIATION

- Soil binders do not hold up to pedestrian or vehicular traffic across treated areas.
- Soil binders may not penetrate soil surfaces made up primarily of silt and clay, particularly when compacted.
- Some soil binders may not perform well with low relative humidity. Under rainy conditions, some agents may become slippery or leach out of the soil.
- Soil binders may not cure if low temperatures occur within 24 hours of application.
- The water quality impacts of soil binders are relatively unknown and some may have water quality impacts due to their chemical makeup.
- A sampling and analysis plan must be incorporated into the SWPPP as soil binders could be a source of non-visible pollutants.

Implementation

General Considerations

- Regional soil types will dictate appropriate soil binders to be used.
- A soil binder must be environmentally benign (non-toxic to plant and animal life), easy to apply, easy to maintain, economical, and should not stain paved or painted surfaces. Soil binders should not pollute stormwater.
- Some soil binders may not be compatible with existing vegetation.
- Performance of soil binders depends on temperature, humidity, and traffic across treated areas.
- Avoid over spray onto roads, sidewalks, drainage channels, existing vegetation, etc.

Selecting a Soil Binder

Properties of common soil binders used for erosion control are provided on Table 1 at the end of this BMP. Use Table 1 to select an appropriate soil binder. Refer to WE-1, Wind Erosion Control, for dust control soil binders.

Factors to consider when selecting a soil binder include the following:

- Suitability to situation - Consider where the soil binder will be applied, if it needs a high resistance to leaching or abrasion, and whether it needs to be compatible with any existing vegetation. Determine the length of time soil stabilization will be needed, and if the soil binder will be placed in an area where it will degrade rapidly. In general, slope steepness is not a discriminating factor for the listed soil binders.
- Soil types and surface materials - Fines and moisture content are key properties of surface materials. Consider a soil binder's ability to penetrate, likelihood of leaching, and ability to form a surface crust on the surface materials.
- Frequency of application - The frequency of application can be affected by subgrade conditions, surface type, climate, and maintenance schedule. Frequent applications could

lead to high costs. Application frequency may be minimized if the soil binder has good penetration, low evaporation, and good longevity. Consider also that frequent application will require frequent equipment clean up.

Plant-Material Based (Short Lived) Binders

Guar: Guar is a non-toxic, biodegradable, natural galactomannan based hydrocolloid treated with dispersant agents for easy field mixing. It should be mixed with water at the rate of 11 to 15 lb per 1,000 gallons. Recommended minimum application rates are as follows:

Application Rates for Guar Soil Stabilizer

Slope (H:V):	Flat	4:1	3:1	2:1	1:1
lb/acre:	40	45	50	60	70

Psyllium: Psyllium is composed of the finely ground muciloid coating of plantago seeds that is applied as a dry powder or in a wet slurry to the surface of the soil. It dries to form a firm but rewettable membrane that binds soil particles together but permits germination and growth of seed. Psyllium requires 12 to 18 hours drying time. Application rates should be from 80 to 200 lb/acre, with enough water in solution to allow for a uniform slurry flow.

Starch: Starch is non-ionic, cold water soluble (pre-gelatinized) granular cornstarch. The material is mixed with water and applied at the rate of 150 lb/acre. Approximate drying time is 9 to 12 hours.

Plant-Material Based (Long Lived) Binders

Pitch and Rosin Emulsion: Generally, a non-ionic pitch and rosin emulsion has a minimum solids content of 48%. The rosin should be a minimum of 26% of the total solids content. The soil stabilizer should be non-corrosive, water dilutable emulsion that upon application cures to a water insoluble binding and cementing agent. For soil erosion control applications, the emulsion is diluted and should be applied as follows:

- For clayey soil: 5 parts water to 1 part emulsion
- For sandy soil: 10 parts water to 1 part emulsion

Application can be by water truck or hydraulic seeder with the emulsion and product mixture applied at the rate specified by the manufacturer.

Polymeric Emulsion Blend Binders

Acrylic Copolymers and Polymers: Polymeric soil stabilizers should consist of a liquid or solid polymer or copolymer with an acrylic base that contains a minimum of 55% solids. The polymeric compound should be handled and mixed in a manner that will not cause foaming or should contain an anti-foaming agent. The polymeric emulsion should not exceed its shelf life or expiration date; manufacturers should provide the expiration date. Polymeric soil stabilizer should be readily miscible in water, non-injurious to seed or animal life, non-flammable, should provide surface soil stabilization for various soil types without totally inhibiting water infiltration, and should not re-emulsify when cured. The applied compound should air cure within a maximum of 36 to 48 hours. Liquid copolymer should be diluted at a rate of 10 parts water to 1 part polymer and the mixture applied to soil at a rate of 1,175 gallons/acre.

Liquid Polymers of Methacrylates and Acrylates: This material consists of a tackifier/sealer that is a liquid polymer of methacrylates and acrylates. It is an aqueous 100% acrylic emulsion blend of 40% solids by volume that is free from styrene, acetate, vinyl, ethoxylated surfactants or silicates. For soil stabilization applications, it is diluted with water in accordance with manufacturer's recommendations, and applied with a hydraulic seeder at the rate of 20 gallons/acre. Drying time is 12 to 18 hours after application.

Copolymers of Sodium Acrylates and Acrylamides: These materials are non-toxic, dry powders that are copolymers of sodium acrylate and acrylamide. They are mixed with water and applied to the soil surface for erosion control at rates that are determined by slope gradient:

Slope Gradient (H:V)	lb/acre
Flat to 5:1	3.0 – 5.0
5:1 to 3:1	5.0 – 10.0
2:2 to 1:1	10.0 – 20.0

Poly-Acrylamide and Copolymer of Acrylamide: Linear copolymer polyacrylamide is packaged as a dry flowable solid. When used as a stand alone stabilizer, it is diluted at a rate of 11lb/1,000 gal of water and applied at the rate of 5.0 lb/acre.

Hydro-Colloid Polymers: Hydro-Colloid Polymers are various combinations of dry flowable poly-acrylamides, copolymers and hydro-colloid polymers that are mixed with water and applied to the soil surface at rates of 55 to 60 lb/acre. Drying times are 0 to 4 hours.

Cementitious-Based Binders

Gypsum: This is a formulated gypsum based product that readily mixes with water and mulch to form a thin protective crust on the soil surface. It is composed of high purity gypsum that is ground, calcined and processed into calcium sulfate hemihydrate with a minimum purity of 86%. It is mixed in a hydraulic seeder and applied at rates 4,000 to 12,000 lb/acre. Drying time is 4 to 8 hours.

Applying Soil Binders

After selecting an appropriate soil binder, the untreated soil surface must be prepared before applying the soil binder. The untreated soil surface must contain sufficient moisture to assist the agent in achieving uniform distribution. In general, the following steps should be followed:

- Follow manufacturer's written recommendations for application rates, pre-wetting of application area, and cleaning of equipment after use.
- Prior to application, roughen embankment and fill areas.
- Consider the drying time for the selected soil binder and apply with sufficient time before anticipated rainfall. Soil binders should not be applied during or immediately before rainfall.
- Avoid over spray onto roads, sidewalks, drainage channels, sound walls, existing vegetation, etc.

- Soil binders should not be applied to frozen soil, areas with standing water, under freezing or rainy conditions, or when the temperature is below 40°F during the curing period.
- More than one treatment is often necessary, although the second treatment may be diluted or have a lower application rate.
- Generally, soil binders require a minimum curing time of 24 hours before they are fully effective. Refer to manufacturer's instructions for specific cure time.
- For liquid agents:
  - Crown or slope ground to avoid ponding.
  - Uniformly pre-wet ground at 0.03 to 0.3 gal/yd^2 or according to manufacturer's recommendations.
  - Apply solution under pressure. Overlap solution 6 to 12 in.
  - Allow treated area to cure for the time recommended by the manufacturer; typically at least 24 hours.
  - Apply second treatment before first treatment becomes ineffective, using 50% application rate.
  - In low humidities, reactivate chemicals by re-wetting with water at 0.1 to 0.2 gal/yd^2.

Costs

Costs vary according to the soil stabilizer selected for implementation. The following are approximate costs:

Soil Binder	Cost per Acre
Plant-Material Based (Short Lived) Binders	$400
Plant-Material Based (Long Lived) Binders	$1,200
Polymeric Emulsion Blend Binders	$400 (1)
Cementitious-Based Binders	$800

(1) $1,200 for Acrylic polymers and copolymers

Source: Caltrans Guidance for Soil Stabilization for Temporary Slopes, Nov. 1999

Inspection and Maintenance

- Inspect BMPs prior to forecast rain, daily during extended rain events, after rain events, weekly during the rainy season, and at two-week intervals during the non-rainy season.
- Areas where erosion is evident shall be repaired and BMPs re-applied as soon as possible. Care should be exercised to minimize the damage to protected areas while making repairs, as any area damaged will require re-application of BMPs.
- Reapply the selected soil binder as needed to maintain effectiveness.

References

Manual of Standards of Erosion and Sediment Control Measures, Association of Bay Area Governments, May 1995.

Sedimentation and Erosion Control, An Inventory of Current Practices Draft, US EPA, April 1990.

Stormwater Quality Handbooks Construction Site Best Management Practices (BMPs) Manual, State of California Department of Transportation (Caltrans), November 2000.

Guidance Document: Soil Stabilization for Temporary Slopes, State of California Department of Transportation (Caltrans), November 1999.

Stormwater Management for Construction Activities, Developing Pollution Prevention Plans and Best Management Practices, EPA 832-R-92005; USEPA, April 1992.

Table 1 Properties of Soil Binders for Erosion Control

Evaluation Criteria	Binder Type			
	Plant Material Based (Short Lived)	**Plant Material Based (Long Lived)**	**Polymeric Emulsion Blends**	**Cementitious-Based Binders**
Relative Cost	Low	Low	Low	Low
Resistance to Leaching	High	High	Low to Moderate	Moderate
Resistance to Abrasion	Moderate	Low	Moderate to High	Moderate to High
Longevity	Short to Medium	Medium	Medium to Long	Medium
Minimum Curing Time before Rain	9 to 18 hours	19 to 24 hours	0 to 24 hours	4 to 8 hours
Compatibility with Existing Vegetation	Good	Poor	Poor	Poor
Mode of Degradation	Biodegradable	Biodegradable	Photodegradable/ Chemically Degradable	Photodegradable/ Chemically Degradable
Labor Intensive	No	No	No	No
Specialized Application Equipment	Water Truck or Hydraulic Mulcher	Water Truck or Hydraulic Mulcher	Water Truck or Hydraulic Mulcher	Water Truck or Hydraulic Mulcher
Liquid/Powder	Powder	Liquid	Liquid/Powder	Powder
Surface Crusting	Yes, but dissolves on rewetting	Yes	Yes, but dissolves on rewetting	Yes
Clean Up	Water	Water	Water	Water
Erosion Control Application Rate	Varies (1)	Varies (1)	Varies (1)	4,000 to 12,000 lbs/acre

(1) See Implementation for specific rates.

Straw Mulch EC-6

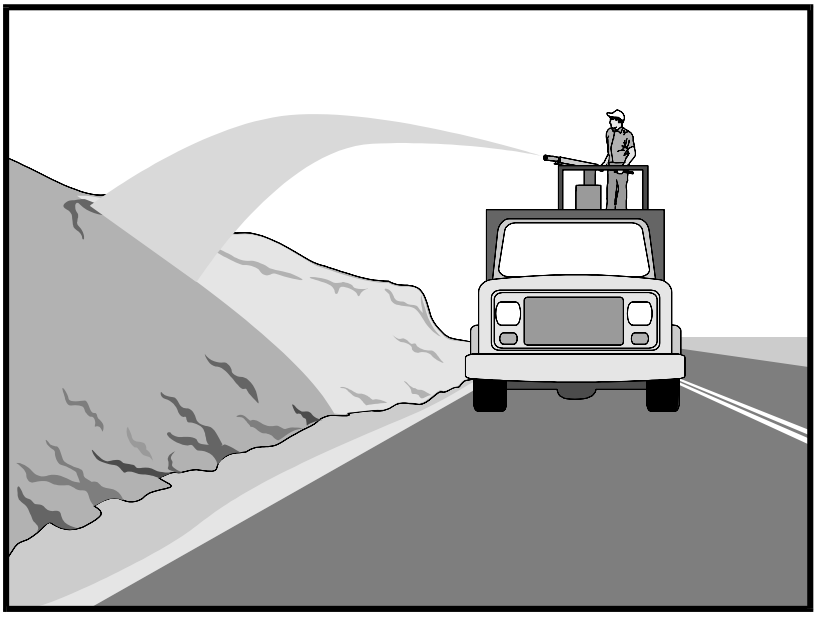

Objectives

EC	Erosion Control	☑
SE	Sediment Control	
TR	Tracking Control	
WE	Wind Erosion Control	
NS	Non-Stormwater Management Control	
WM	Waste Management and Materials Pollution Control	

Legend:

☑ **Primary Objective**

☒ **Secondary Objective**

Targeted Constituents

Sediment	☑
Nutrients	
Trash	
Metals	
Bacteria	
Oil and Grease	
Organics	

Potential Alternatives

EC-3 Hydraulic Mulch

EC-4 Hydroseeding

EC-5 Soil Binders

EC-7 Geotextiles and Mats

EC-8 Wood Mulching

Description and Purpose

Straw mulch consists of placing a uniform layer of straw and incorporating it into the soil with a studded roller or anchoring it with a tackifier stabilizing emulsion. Straw mulch protects the soil surface from the impact of rain drops, preventing soil particles from becoming dislodged.

Suitable Applications

Straw mulch is suitable for soil disturbed areas requiring temporary protection until permanent stabilization is established. Straw mulch is typically used for erosion control on disturbed areas until soils can be prepared for permanent vegetation. Straw mulch is also used in combination with temporary and/or permanent seeding strategies to enhance plant establishment.

Limitations

- Availability of straw and straw blowing equipment may be limited just prior to the rainy season and prior to storms due to high demand.
- There is a potential for introduction of weed seed and unwanted plant material.
- When straw blowers are used to apply straw mulch, the treatment areas must be within 150 ft of a road or surface capable of supporting trucks.
- Straw mulch applied by hand is more time intensive and potentially costly.

- Wind may limit application of straw and blow straw into undesired locations.
- May have to be removed prior to permanent seeding or prior to further earthwork.
- "Punching" of straw does not work in sandy soils, necessitating the use of tackifiers.

Implementation

- Straw shall be derived from wheat, rice, or barley. Where required by the plans, specifications, permits, or environmental documents, native grass straw shall be used.
- A tackifier is the preferred method for anchoring straw mulch to the soil on slopes.
- Crimping, punch roller-type rollers, or track walking may also be used to incorporate straw mulch into the soil on slopes. Track walking shall only be used where other methods are impractical.
- Avoid placing straw onto roads, sidewalks, drainage channels, sound walls, existing vegetation, etc.
- Straw mulch with tackifier shall not be applied during or immediately before rainfall.
- In San Diego, use of straw near wood framed home construction has been frowned on by the Fire Marshall.

Application Procedures

- Apply straw at a minimum rate of 4,000 lb/acre, either by machine or by hand distribution.
- Roughen embankments and fill rills before placing the straw mulch by rolling with a crimping or punching type roller or by track walking.
- Evenly distribute straw mulch on the soil surface.
- Anchor straw mulch to the soil surface by "punching" it into the soil mechanically (incorporating). Alternatively, use a tackifier to adhere straw fibers.
- Methods for holding the straw mulch in place depend upon the slope steepness, accessibility, soil conditions, and longevity.
    - On small areas, a spade or shovel can be used to punch in straw mulch.
    - On slopes with soils that are stable enough and of sufficient gradient to safely support construction equipment without contributing to compaction and instability problems, straw can be "punched" into the ground using a knife blade roller or a straight bladed coulter, known commercially as a "crimper".
    - On small areas and/or steep slopes, straw can also be held in place using plastic netting or jute. The netting shall be held in place using 11 gauge wire staples, geotextile pins or wooden stakes as described in EC-7, Geotextiles and Mats.
    - A tackifier acts to glue the straw fibers together and to the soil surface. The tackifier shall be selected based on longevity and ability to hold the fibers in place. A tackifier is

typically applied at a rate of 125 lb/acre. In windy conditions, the rates are typically 180 lb/acre.

Costs

Average annual cost for installation and maintenance (3-4 months useful life) is $2,500 per acre. Application by hand is more time intensive and potentially costly.

Inspection and Maintenance

- Inspect BMPs prior to forecast rain, daily during extended rain events, after rain events, weekly during the rainy season, and at two-week intervals during the non-rainy season.
- Areas where erosion is evident should be repaired and BMPs re-applied as soon as possible. Care should be exercised to minimize the damage to protected areas while making repairs, as any area damaged will require re-application of BMPs.
- The key consideration in inspection and maintenance is that the straw needs to last long enough to achieve erosion control objectives.
- Maintain an unbroken, temporary mulched ground cover while disturbed soil areas are inactive. Repair any damaged ground cover and re-mulch exposed areas.
- Reapplication of straw mulch and tackifier may be required to maintain effective soil stabilization over disturbed areas and slopes.

References

Controlling Erosion of Construction Sites, Agricultural Information Bulletin #347, U.S. Department of Agriculture (USDA), Natural Resources Conservation Service (NRCS) (formerly Soil Conservation Service – SCS).

Guides for Erosion and Sediment Control in California, USDA Soils Conservation Service, January 1991.

Manual of Standards of Erosion and Sediment Control Measures, Association of Bay Area Governments, May 1995.

Soil Erosion by Water, Agricultural Information Bulletin #513, U.S. Department of Agriculture, Soil Conservation Service.

Stormwater Quality Handbooks Construction Site Best Management Practices (BMPs) Manual, State of California Department of Transportation (Caltrans), November 2000.

Stormwater Management of the Puget Sound Basin, Technical Manual, Publication #91-75, Washington State Department of Ecology, February 1992.

Water Quality Management Plan for the Lake Tahoe Region, Volume II, Handbook of Management Practices, Tahoe Regional Planning Agency, November 1988.

Geotextiles and Mats EC-7

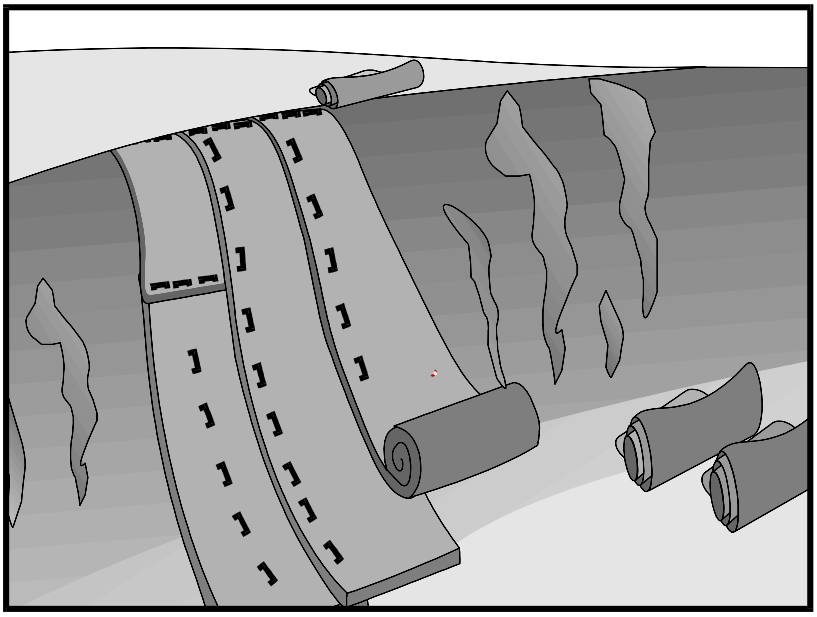

Objectives

EC	Erosion Control	☑
SE	Sediment Control	
TR	Tracking Control	
WE	Wind Erosion Control	3
NS	Non-Stormwater Management Control	
WM	Waste Management and Materials Pollution Control	

Legend:

☑ **Primary Objective**

☒ **Secondary Objective**

Targeted Constituents

Sediment	☑
Nutrients	
Trash	
Metals	
Bacteria	
Oil and Grease	
Organics	

Potential Alternatives

EC-3 Hydraulic Mulch

EC-4 Hydroseeding

EC-5 Soil Binders

EC-6 Straw Mulch

EC-8 Wood Mulching

Description and Purpose

Mattings of natural materials are used to cover the soil surface to reduce erosion from rainfall impact, hold soil in place, and absorb and hold moisture near the soil surface. Additionally, matting may be used to stabilize soils until vegetation is established.

Suitable Applications

Mattings are commonly applied on short, steep slopes where erosion hazard is high and vegetation will be slow to establish. Mattings are also used on stream banks where moving water at velocities between 3 ft/s and 6 ft/s are likely to wash out new vegetation, and in areas where the soil surface is disturbed and where existing vegetation has been removed. Matting may also be used when seeding cannot occur (e.g., late season construction and/or the arrival of an early rain season). Erosion control matting should be considered when the soils are fine grained and potentially erosive. These measures should be considered in the following situations.

- Steep slopes, generally steeper than 3:1 (H:V)
- Slopes where the erosion potential is high
- Slopes and disturbed soils where mulch must be anchored
- Disturbed areas where plants are slow to develop
- Channels with flows exceeding 3.3 ft/s

- Channels to be vegetated
- Stockpiles
- Slopes adjacent to water bodies of Environmentally Sensitive Areas (ESAs)

Limitations

- Properly installed mattings provide excellent erosion control but do so at relatively high cost. This high cost typically limits the use of mattings to areas of concentrated channel flow and steep slopes.
- Mattings are more costly than other BMP practices, limiting their use to areas where other BMPs are ineffective (e.g. channels, steep slopes).
- Installation is critical and requires experienced contractors. The contractor should install the matting material in such a manner that continuous contact between the material and the soil occurs.
- Geotextiles and Mats may delay seed germination, due to reduction in soil temperature.
- Blankets and mats are generally not suitable for excessively rocky sites or areas where the final vegetation will be mowed (since staples and netting can catch in mowers).
- Blankets and mats must be removed and disposed of prior to application of permanent soil stabilization measures.
- Plastic sheeting is easily vandalized, easily torn, photodegradable, and must be disposed of at a landfill.
- Plastic results in 100% runoff, which may cause serious erosion problems in the areas receiving the increased flow.
- The use of plastic should be limited to covering stockpiles or very small graded areas for short periods of time (such as through one imminent storm event) until alternative measures, such as seeding and mulching, may be installed.
- Geotextiles, mats, plastic covers, and erosion control covers have maximum flow rate limitations; consult the manufacturer for proper selection.
- Not suitable for areas that have heavy foot traffic (tripping hazard) – e.g., pad areas around buildings under construction.

Implementation

Material Selection

Organic matting materials have been found to be effective where re-vegetation will be provided by re-seeding. The choice of matting should be based on the size of area, side slopes, surface conditions such as hardness, moisture, weed growth, and availability of materials.

The following natural and synthetic mattings are commonly used:

Geotextiles

- Material should be a woven polypropylene fabric with minimum thickness of 0.06 in., minimum width of 12 ft and should have minimum tensile strength of 150 lbs (warp), 80 lbs (fill) in conformance with the requirements in ASTM Designation: D 4632. The permittivity of the fabric should be approximately 0.07 sec^{-1} in conformance with the requirements in ASTM Designation: D4491. The fabric should have an ultraviolet (UV) stability of 70 percent in conformance with the requirements in ASTM designation: D4355. Geotextile blankets must be secured in place with wire staples or sandbags and by keying into tops of slopes to prevent infiltration of surface waters under geotextile. Staples should be made of minimum 11 gauge steel wire and should be U-shaped with 8 in. legs and 2 in. crown.

- Geotextiles may be reused if they are suitable for the use intended.

Plastic Covers

- Plastic sheeting should have a minimum thickness of 6 mils, and must be keyed in at the top of slope and firmly held in place with sandbags or other weights placed no more than 10 ft apart. Seams are typically taped or weighted down their entire length, and there should be at least a 12 in. to 24 in. overlap of all seams. Edges should be embedded a minimum of 6 in. in soil.

- All sheeting must be inspected periodically after installation and after significant rainstorms to check for erosion, undermining, and anchorage failure. Any failures must be repaired immediately. If washout or breakages occur, the material should be re-installed after repairing the damage to the slope.

Erosion Control Blankets/Mats

- Biodegradable rolled erosion control products (RECPs) are typically composed of jute fibers, curled wood fibers, straw, coconut fiber, or a combination of these materials. In order for an RECP to be considered 100% biodegradable, the netting, sewing or adhesive system that holds the biodegradable mulch fibers together must also be biodegradable.

  - **Jute** is a natural fiber that is made into a yarn that is loosely woven into a biodegradable mesh. It is designed to be used in conjunction with vegetation and has longevity of approximately one year. The material is supplied in rolled strips, which should be secured to the soil with U-shaped staples or stakes in accordance with manufacturers' recommendations.

  - **Excelsior** (curled wood fiber) blanket material should consist of machine produced mats of curled wood excelsior with 80 percent of the fiber 6 in. or longer. The excelsior blanket should be of consistent thickness. The wood fiber must be evenly distributed over the entire area of the blanket. The top surface of the blanket should be covered with a photodegradable extruded plastic mesh. The blanket should be smolder resistant without the use of chemical additives and should be non-toxic and non-injurious to plant and animal life. Excelsior blankets should be furnished in rolled strips, a minimum of 48 in. wide, and should have an average weight of 0.8 lb/yd^2, ±10 percent, at the time of manufacture. Excelsior blankets must be secured in place with wire staples. Staples

should be made of minimum 11 gauge steel wire and should be U-shaped with 8 in. legs and 2 in. crown.

- **Straw blanket** should be machine produced mats of straw with a lightweight biodegradable netting top layer. The straw should be attached to the netting with biodegradable thread or glue strips. The straw blanket should be of consistent thickness. The straw should be evenly distributed over the entire area of the blanket. Straw blanket should be furnished in rolled strips a minimum of 6.5 ft wide, a minimum of 80 ft long and a minimum of 0.5 lb/yd^2. Straw blankets must be secured in place with wire staples. Staples should be made of minimum 11 gauge steel wire and should be U-shaped with 8 in. legs and 2 in. crown.

- **Wood fiber blanket** is composed of biodegradable fiber mulch with extruded plastic netting held together with adhesives. The material is designed to enhance re-vegetation. The material is furnished in rolled strips, which must be secured to the ground with U-shaped staples or stakes in accordance with manufacturers' recommendations.

- **Coconut fiber blanket** should be a machine produced mat of 100 percent coconut fiber with biodegradable netting on the top and bottom. The coconut fiber should be attached to the netting with biodegradable thread or glue strips. The coconut fiber blanket should be of consistent thickness. The coconut fiber should be evenly distributed over the entire area of the blanket. Coconut fiber blanket should be furnished in rolled strips with a minimum of 6.5 ft wide, a minimum of 80 ft. long and a minimum of 0.5 lb/yd^2. Coconut fiber blankets must be secured in place with wire staples. Staples should be made of minimum 11 gauge steel wire and should be U-shaped with 8 in. legs and 2 in. crown.

- **Coconut fiber mesh** is a thin permeable membrane made from coconut or corn fiber that is spun into a yarn and woven into a biodegradable mat. It is designed to be used in conjunction with vegetation and typically has longevity of several years. The material is supplied in rolled strips, which must be secured to the soil with U-shaped staples or stakes in accordance with manufacturers' recommendations.

- **Straw coconut fiber blanket** should be machine produced mats of 70 percent straw and 30 percent coconut fiber with a biodegradable netting top layer and a biodegradable bottom net. The straw and coconut fiber should be attached to the netting with biodegradable thread or glue strips. The straw coconut fiber blanket should be of consistent thickness. The straw and coconut fiber should be evenly distributed over the entire area of the blanket. Straw coconut fiber blanket should be furnished in rolled strips a minimum of 6.5 ft wide, a minimum of 80 ft long and a minimum of 0.5 lb/yd^2. Straw coconut fiber blankets must be secured in place with wire staples. Staples should be made of minimum 11 gauge steel wire and should be U-shaped with 8 in. legs and 2 in. crown.

■ Non-biodegradable RECPs are typically composed of polypropylene, polyethylene, nylon or other synthetic fibers. In some cases, a combination of biodegradable and synthetic fibers is used to construct the RECP. Netting used to hold these fibers together is typically non-biodegradable as well.

- **Plastic netting** is a lightweight biaxially oriented netting designed for securing loose mulches like straw or paper to soil surfaces to establish vegetation. The netting is photodegradable. The netting is supplied in rolled strips, which must be secured with U-shaped staples or stakes in accordance with manufacturers' recommendations.

- **Plastic mesh** is an open weave geotextile that is composed of an extruded synthetic fiber woven into a mesh with an opening size of less than ¼ in. It is used with re-vegetation or may be used to secure loose fiber such as straw to the ground. The material is supplied in rolled strips, which must be secured to the soil with U-shaped staples or stakes in accordance with manufacturers' recommendations.

- **Synthetic fiber with netting** is a mat that is composed of durable synthetic fibers treated to resist chemicals and ultraviolet light. The mat is a dense, three dimensional mesh of synthetic (typically polyolefin) fibers stitched between two polypropylene nets. The mats are designed to be re-vegetated and provide a permanent composite system of soil, roots, and geomatrix. The material is furnished in rolled strips, which must be secured with U-shaped staples or stakes in accordance with manufacturers' recommendations.

- **Bonded synthetic fibers** consist of a three dimensional geomatrix nylon (or other synthetic) matting. Typically it has more than 90 percent open area, which facilitates root growth. It's tough root reinforcing system anchors vegetation and protects against hydraulic lift and shear forces created by high volume discharges. It can be installed over prepared soil, followed by seeding into the mat. Once vegetated, it becomes an invisible composite system of soil, roots, and geomatrix. The material is furnished in rolled strips that must be secured with U-shaped staples or stakes in accordance with manufacturers' recommendations.

- **Combination synthetic and biodegradable RECPs** consist of biodegradable fibers, such as wood fiber or coconut fiber, with a heavy polypropylene net stitched to the top and a high strength continuous filament geomatrix or net stitched to the bottom. The material is designed to enhance re-vegetation. The material is furnished in rolled strips, which must be secured with U-shaped staples or stakes in accordance with manufacturers' recommendations.

Site Preparation

- Proper site preparation is essential to ensure complete contact of the blanket or matting with the soil.

- Grade and shape the area of installation.

- Remove all rocks, clods, vegetation or other obstructions so that the installed blankets or mats will have complete, direct contact with the soil.

- Prepare seedbed by loosening 2 to 3 in. of topsoil.

Seeding

Seed the area before blanket installation for erosion control and revegetation. Seeding after mat installation is often specified for turf reinforcement application. When seeding prior to blanket

installation, all check slots and other areas disturbed during installation must be re-seeded. Where soil filling is specified, seed the matting and the entire disturbed area after installation and prior to filling the mat with soil.

Fertilize and seed in accordance with seeding specifications or other types of landscaping plans. When using jute matting on a seeded area, apply approximately half the seed before laying the mat and the remainder after laying the mat. The protective matting can be laid over areas where grass has been planted and the seedlings have emerged. Where vines or other ground covers are to be planted, lay the protective matting first and then plant through matting according to design of planting.

Check Slots

Check slots are made of glass fiber strips, excelsior matting strips or tight folded jute matting blanket or strips for use on steep, highly erodible watercourses. The check slots are placed in narrow trenches 6 to 12 in. deep across the channel and left flush with the soil surface. They are to cover the full cross section of designed flow.

Laying and Securing Matting

- Before laying the matting, all check slots should be installed and the friable seedbed made free from clods, rocks, and roots. The surface should be compacted and finished according to the requirements of the manufacturer's recommendations.

- Mechanical or manual lay down equipment should be capable of handling full rolls of fabric and laying the fabric smoothly without wrinkles or folds. The equipment should meet the fabric manufacturer's recommendations or equivalent standards.

Anchoring

- U-shaped wire staples, metal geotextile stake pins, or triangular wooden stakes can be used to anchor mats and blankets to the ground surface.

- Wire staples should be made of minimum 11 gauge steel wire and should be U-shaped with 8 in. legs and 2 in. crown.

- Metal stake pins should be 0.188 in. diameter steel with a 1.5 in. steel washer at the head of the pin, and 8 in. in length.

- Wire staples and metal stakes should be driven flush to the soil surface.

Installation on Slopes

Installation should be in accordance with the manufacturer's recommendations. In general, these will be as follows:

- Begin at the top of the slope and anchor the blanket in a 6 in. deep by 6 in. wide trench. Backfill trench and tamp earth firmly.

- Unroll blanket down slope in the direction of water flow.

- Overlap the edges of adjacent parallel rolls 2 to 3 in. and staple every 3 ft.

- When blankets must be spliced, place blankets end over end (shingle style) with 6 in. overlap. Staple through overlapped area, approximately 12 in. apart.
- Lay blankets loosely and maintain direct contact with the soil. Do not stretch.
- Staple blankets sufficiently to anchor blanket and maintain contact with the soil. Staples should be placed down the center and staggered with the staples placed along the edges. Steep slopes, 1:1 (H:V) to 2:1 (H:V), require a minimum of 2 staples/yd^2. Moderate slopes, 2:1 (H:V) to 3:1 (H:V), require a minimum of 1 ½ staples/yd^2.

Installation in Channels

Installation should be in accordance with the manufacturer's recommendations. In general, these will be as follows:

- Dig initial anchor trench 12 in. deep and 6 in. wide across the channel at the lower end of the project area.
- Excavate intermittent check slots, 6 in. deep and 6 in. wide across the channel at 25 to 30 ft intervals along the channels.
- Cut longitudinal channel anchor trenches 4 in. deep and 4 in. wide along each side of the installation to bury edges of matting, whenever possible extend matting 2 to 3 in. above the crest of the channel side slopes.
- Beginning at the downstream end and in the center of the channel, place the initial end of the first roll in the anchor trench and secure with fastening devices at 12 in. intervals. Note: matting will initially be upside down in anchor trench.
- In the same manner, position adjacent rolls in anchor trench, overlapping the preceding roll a minimum of 3 in.
- Secure these initial ends of mats with anchors at 12 in. intervals, backfill and compact soil.
- Unroll center strip of matting upstream. Stop at next check slot or terminal anchor trench. Unroll adjacent mats upstream in similar fashion, maintaining a 3 in. overlap.
- Fold and secure all rolls of matting snugly into all transverse check slots. Lay mat in the bottom of the slot then fold back against itself. Anchor through both layers of mat at 12 in. intervals, then backfill and compact soil. Continue rolling all mat widths upstream to the next check slot or terminal anchor trench.
- Alternate method for non-critical installations: Place two rows of anchors on 6 in. centers at 25 to 30 ft. intervals in lieu of excavated check slots.
- Staple shingled lap spliced ends a minimum of 12 in. apart on 12 in. intervals.
- Place edges of outside mats in previously excavated longitudinal slots; anchor using prescribed staple pattern, backfill, and compact soil.
- Anchor, fill, and compact upstream end of mat in a 12 in. by 6 in. terminal trench.

- Secure mat to ground surface using U-shaped wire staples, geotextile pins, or wooden stakes.
- Seed and fill turf reinforcement matting with soil, if specified.

Soil Filling (if specified for turf reinforcement)

- Always consult the manufacturer's recommendations for installation.
- Do not drive tracked or heavy equipment over mat.
- Avoid any traffic over matting if loose or wet soil conditions exist.
- Use shovels, rakes, or brooms for fine grading and touch up.
- Smooth out soil filling just exposing top netting of mat.

Temporary Soil Stabilization Removal

- Temporary soil stabilization removed from the site of the work must be disposed of if necessary.

Costs

Relatively high compared to other BMPs. Biodegradable materials: $0.50 - $0.57/yd^2. Permanent materials: $3.00 - $4.50/yd^2. Staples: $0.04 - $0.05/staple. Approximate costs for installed materials are shown below:

Rolled Erosion Control Products		Installed Cost per Acre
Biodegradable	Jute Mesh	$6,500
	Curled Wood Fiber	$10,500
	Straw	$8,900
	Wood Fiber	$8,900
	Coconut Fiber	$13,000
	Coconut Fiber Mesh	$31,200
	Straw Coconut Fiber	$10,900
Non-Biodegradable	Plastic Netting	$2,000
	Plastic Mesh	$3,200
	Synthetic Fiber with Netting	$34,800
	Bonded Synthetic Fibers	$50,000
	Combination with Biodegradable	$32,000

Source: Caltrans Guidance for Soil Stabilization for Temporary Slopes, Nov. 1999

Inspection and Maintenance

- Inspect BMPs prior to forecast rain, daily during extended rain events, after rain events, weekly during the rainy season, and at two-week intervals during the non-rainy season, and at two-week intervals during the non-rainy season.
- Inspect BMPs subject to non-stormwater discharges daily while non-stormwater discharges occur.

- Areas where erosion is evident shall be repaired and BMPs reapplied as soon as possible. Care should be exercised to minimize the damage to protected areas while making repairs, as any area damaged will require reapplication of BMPs.
- If washout or breakage occurs, re-install the material after repairing the damage to the slope or channel.
- Make sure matting is uniformly in contact with the soil.
- Check that all the lap joints are secure.
- Check that staples are flush with the ground.
- Check that disturbed areas are seeded.

References

Guides for Erosion and Sediment Controls in California, USDA Soils Conservation Service, January 1991.

National Management Measures to Control Nonpoint Source Pollution from Urban Areas, United States Environmental Protection Agency, 2002.

Stormwater Quality Handbooks Construction Site Best Management Practices (BMPs) Manual, State of California Department of Transportation (Caltrans), November 2000.

Guidance Document: Soil Stabilization for Temporary Slopes, State of California Department of Transportation (Caltrans), November 1999

Stormwater Management of the Puget Sound Basin, Technical Manual, Publication #91-75, Washington State Department of Ecology, February 1992.

Water Quality Management Plan for The Lake Tahoe Region, Volume II, Handbook of Management Practices, Tahoe Regional Planning Agency, November 1988.

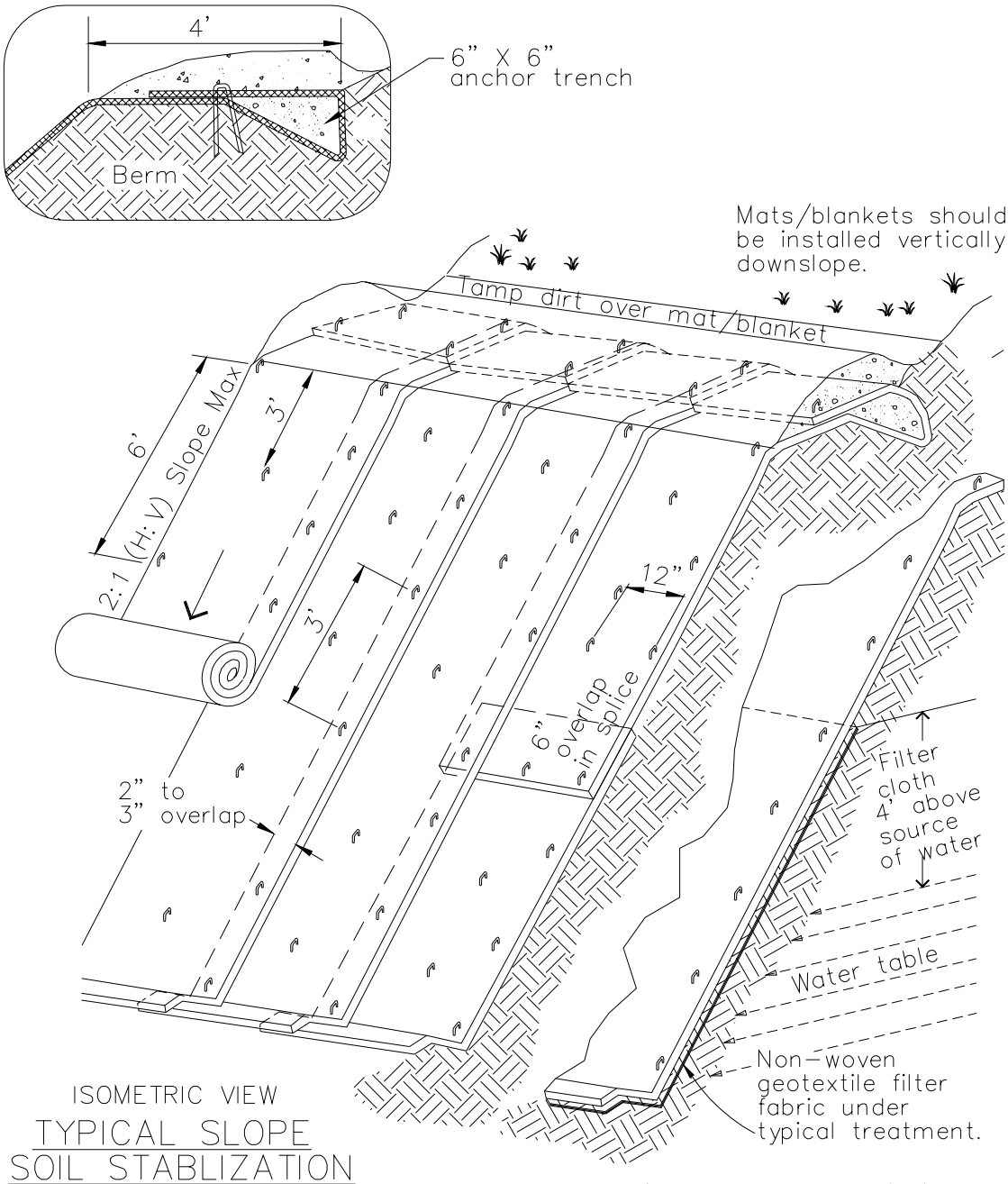

ISOMETRIC VIEW

TYPICAL SLOPE SOIL STABLIZATION

NTS

WET SLOPE LINING

NTS

NOTES:

1. Slope surface shall be free of rocks, clods, sticks and grass. Mats/blankets shall have good soil contact.
2. Lay blankets loosely and stake or staple to maintain direct contact with the soil. Do not stretch.
3. Install per manufacturer's recommendations

TYPICAL INSTALLATION DETAIL

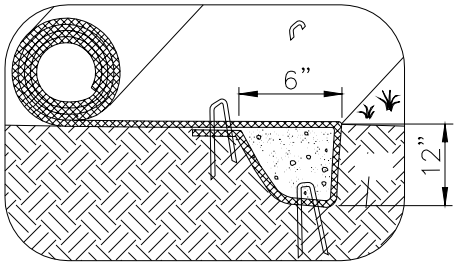

INITIAL CHANNEL ANCHOR TRENCH
NTS

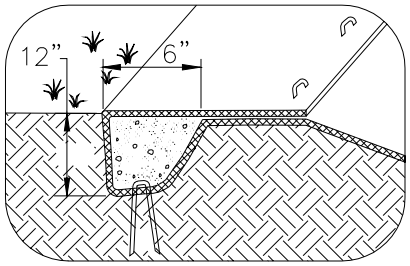

TERMINAL SLOPE AND CHANNEL ANCHOR TRENCH
NTS

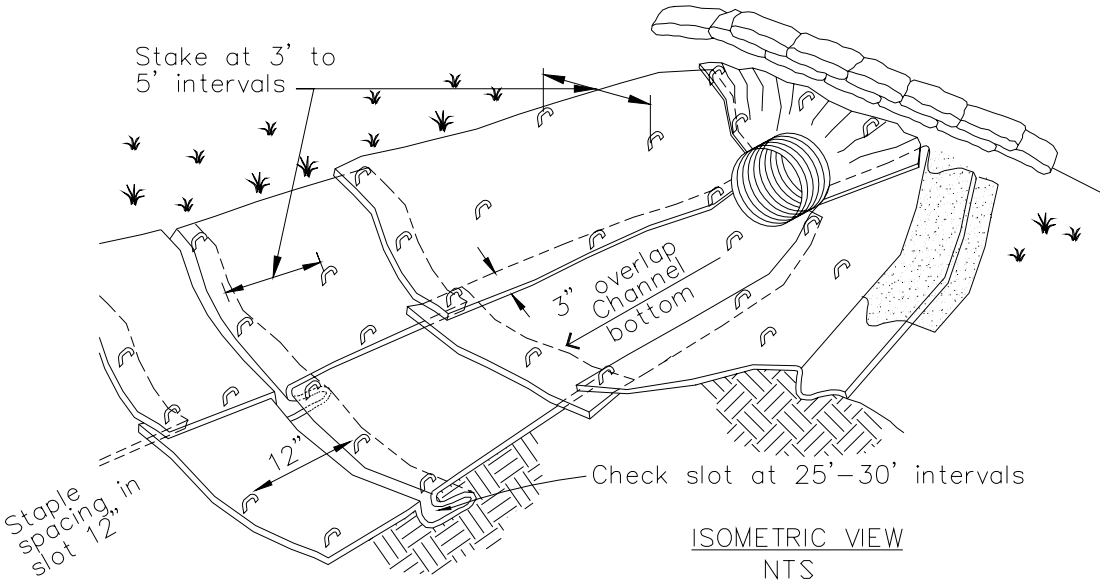

ISOMETRIC VIEW
NTS

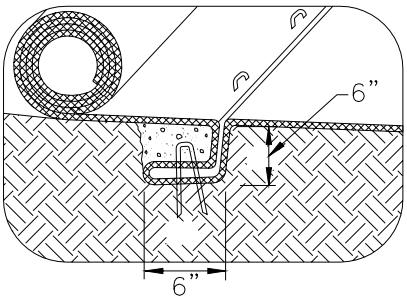

INTERMITTENT CHECK SLOT
NTS

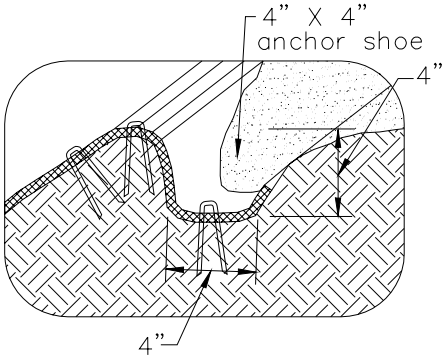

LONGITUDINAL ANCHOR TRENCH
NTS

NOTES:
1. Check slots to be constructed per manufacturers specifications.
2. Staking or stapling layout per manufacturers specifications.
3. Install per manufacturer’s recommendations

TYPICAL INSTALLATION DETAIL

Wood Mulching EC-8

Objectives

EC	Erosion Control	☑
SE	Sediment Control	
TR	Tracking Control	
WE	Wind Erosion Control	☒
NS	Non-Stormwater Management Control	
WM	Waste Management and Materials Pollution Control	

Legend:

☑ **Primary Objective**

☒ **Secondary Objective**

Targeted Constituents

Sediment	☑
Nutrients	
Trash	
Metals	
Bacteria	
Oil and Grease	
Organics	

Potential Alternatives

EC-3 Hydraulic Mulch

EC-4 Hydroseeding

EC-5 Soil Binders

EC-6 Straw Mulch

EC-7 Geotextiles and Mats

Description and Purpose

Wood mulching consist of applying a mixture of shredded wood mulch, bark or compost to disturbed soils. The primary function of wood mulching is to reduce erosion by protecting bare soil from rainfall impact, increasing infiltration, and reducing runoff.

Suitable Applications

Wood mulching is suitable for disturbed soil areas requiring temporary protection until permanent stabilization is established.

Limitations

- Not suitable for use on slopes steeper than 3:1 (H:V). Best suited to flat areas or gentle slopes or 5:1 (H:V) or flatter.
- Wood mulch and compost may introduce unwanted species.
- Not suitable for areas exposed to concentrated flows.
- May need to be removed prior to further earthwork.

Implementation

Mulch Selection

There are many types of mulches. Selection of the appropriate type of mulch should be based on the type of application, site conditions, and compatibility with planned or future uses.

Application Procedures

Prior to application, after existing vegetation has been removed, roughen embankment and fill areas by rolling with a device such

as a punching type roller or by track walking. The construction application procedures for mulches vary significantly depending upon the type of mulching method specified. Two methods are highlighted here:

- Green Material: This type of mulch is produced by the recycling of vegetation trimmings such as grass, shredded shrubs, and trees. Methods of application are generally by hand although pneumatic methods are available.
  - Green material can be used as a temporary ground cover with or without seeding.
  - The green material should be evenly distributed on site to a depth of not more than 2 in.
- Shredded Wood: Suitable for ground cover in ornamental or revegetated plantings.
  - Shredded wood/bark is conditionally suitable. See note under limitations.
  - Distribute by hand or use pneumatic methods.
  - Evenly distribute the mulch across the soil surface to a depth of 2 to 3 in.
- Avoid mulch placement onto roads, sidewalks, drainage channels, existing vegetation, etc.

Costs

Average annual cost for installation and maintenance (3-4 months useful life) is around $4,000 per acre, but cost can increase if the source is not close to the project site.

Inspection and Maintenance

- Inspect BMPs prior to forecast rain, daily during extended rain events, after rain events, weekly during the rainy season, and at two-week intervals during the non-rainy season.
- Areas where erosion is evident shall be repaired and BMPs reapplied as soon as possible. Care should be exercised to minimize the damage to protected areas while making repairs, as any area damaged will require reapplication of BMPs.
- Regardless of the mulching technique selected, the key consideration in inspection and maintenance is that the mulch needs to last long enough to achieve erosion control objectives. If the mulch is applied as a stand alone erosion control method over disturbed areas (without seed), it should last the length of time the site will remain barren or until final re-grading and revegetation.
- Where vegetation is not the ultimate cover, such as ornamental and landscape applications of bark or wood chips, inspection and maintenance should focus on longevity and integrity of the mulch.
- Reapply mulch when bare earth becomes visible.

References

Controlling Erosion of Construction Sites Agriculture Information Bulletin #347, U.S. Department of Agriculture (USDA), Natural Resources Conservation Service (NRCS) (formerly Soil Conservation Service – SCS).

Guides for Erosion and Sediment Control in California, USDA Soils Conservation Service, January 1991.

Manual of Standards of Erosion and Sediment Control Measures, Association of Bay Area Governments, May 1995.

Proposed Guidance Specifying Management Measures for Sources of Nonpoint Pollution in Coastal Waters, Work Group Working Paper, USEPA, April 1992.

Sedimentation and Erosion Control, An Inventory of Current Practices Draft, U.S. EPA, April 1990.

Soil Erosion by Water Agricultural Information Bulletin #513, U.S. Department of Agriculture, Soil Conservation Service.

Stormwater Quality Handbooks Construction Site Best Management Practices (BMPs) Manual, State of California Department of Transportation (Caltrans), November 2000.

Water Quality Management Plan for the Lake Tahoe Region, Volume II, Handbook of Management Practices, Tahoe Regional Planning Agency, November 1988.

Earth Dikes and Drainage Swales EC-9

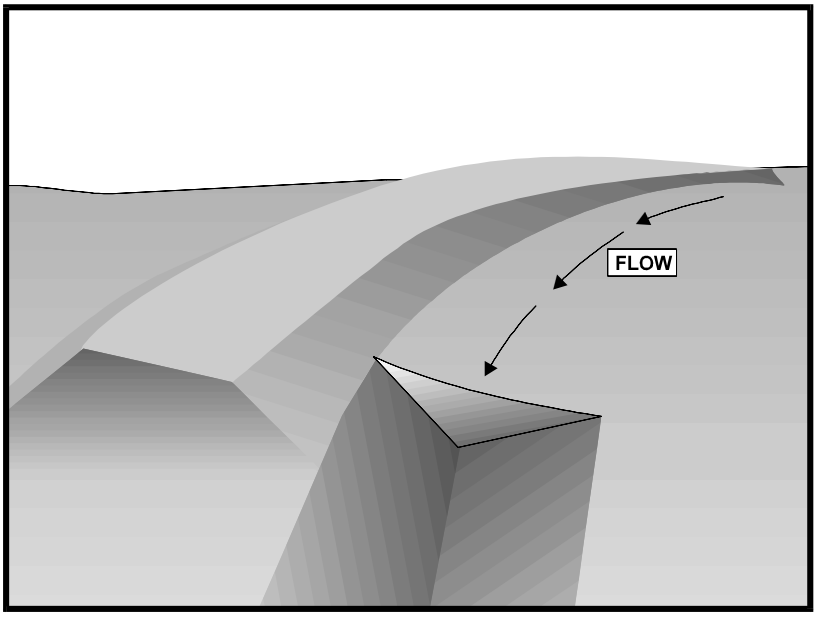

Objectives

EC	Erosion Control	☑
SE	Sediment Control	
TR	Tracking Control	
WE	Wind Erosion Control	
NS	Non-Stormwater Management Control	
WM	Waste Management and Materials Pollution Control	

Legend:

☑ **Primary Objective**

☒ **Secondary Objective**

Targeted Constituents

Sediment	☑
Nutrients	
Trash	
Metals	
Bacteria	
Oil and Grease	
Organics	

Potential Alternatives

None

Description and Purpose

An earth dike is a temporary berm or ridge of compacted soil used to divert runoff or channel water to a desired location. A drainage swale is a shaped and sloped depression in the soil surface used to convey runoff to a desired location. Earth dikes and drainage swales are used to divert off site runoff around the construction site, divert runoff from stabilized areas and disturbed areas, and direct runoff into sediment basins or traps.

Suitable Applications

Earth dikes and drainage swales are suitable for use, individually or together, where runoff needs to be diverted from one area and conveyed to another.

- Earth dikes and drainage swales may be used:
  - To convey surface runoff down sloping land
  - To intercept and divert runoff to avoid sheet flow over sloped surfaces
  - To divert and direct runoff towards a stabilized watercourse, drainage pipe or channel
  - To intercept runoff from paved surfaces
  - Below steep grades where runoff begins to concentrate
  - Along roadways and facility improvements subject to flood drainage

- At the top of slopes to divert runon from adjacent or undisturbed slopes
- At bottom and mid slope locations to intercept sheet flow and convey concentrated flows
- Divert sediment laden runoff into sediment basins or traps

Limitations

Dikes should not be used for drainage areas greater than 10 acres or along slopes greater than 10 percent. For larger areas more permanent drainage structures should be built. All drainage structures should be built in compliance with local municipal requirements.

- Earth dikes may create more disturbed area on site and become barriers to construction equipment.
- Earth dikes must be stabilized immediately, which adds cost and maintenance concerns.
- Diverted stormwater may cause downstream flood damage.
- Dikes should not be constructed of soils that may be easily eroded.
- Regrading the site to remove the dike may add additional cost.
- Temporary drains and swales or any other diversion of runoff should not adversely impact upstream or downstream properties.
- Temporary drains and swales must conform to local floodplain management requirements.
- Earth dikes/drainage swales are not suitable as sediment trapping devices.
- It may be necessary to use other soil stabilization and sediment controls such as check dams, plastics, and blankets, to prevent scour and erosion in newly graded dikes, swales, and ditches.

Implementation

The temporary earth dike is a berm or ridge of compacted soil, located in such a manner as to divert stormwater to a sediment trapping device or a stabilized outlet, thereby reducing the potential for erosion and offsite sedimentation. Earth dikes can also be used to divert runoff from off site and from undisturbed areas away from disturbed areas and to divert sheet flows away from unprotected slopes.

An earth dike does not itself control erosion or remove sediment from runoff. A dike prevents erosion by directing runoff to an erosion control device such as a sediment trap or directing runoff away from an erodible area. Temporary diversion dikes should not adversely impact adjacent properties and must conform to local floodplain management regulations, and should not be used in areas with slopes steeper than 10%.

Slopes that are formed during cut and fill operations should be protected from erosion by runoff. A combination of a temporary drainage swale and an earth dike at the top of a slope can divert runoff to a location where it can be brought to the bottom of the slope (see EC-11, Slope Drains). A combination dike and swale is easily constructed by a single pass of a bulldozer or grader and

compacted by a second pass of the tracks or wheels over the ridge. Diversion structures should be installed when the site is initially graded and remain in place until post construction BMPs are installed and the slopes are stabilized.

Diversion practices concentrate surface runoff, increasing its velocity and erosive force. Thus, the flow out of the drain or swale must be directed onto a stabilized area or into a grade stabilization structure. If significant erosion will occur, a swale should be stabilized using vegetation, chemical treatment, rock rip-rap, matting, or other physical means of stabilization. Any drain or swale that conveys sediment laden runoff must be diverted into a sediment basin or trap before it is discharged from the site.

General

- Care must be applied to correctly size and locate earth dikes, drainage swales. Excessively steep, unlined dikes, and swales are subject to erosion and gully formation.
- Conveyances should be stabilized.
- Use a lined ditch for high flow velocities.
- Select flow velocity based on careful evaluation of the risks due to erosion of the measure, soil types, overtopping, flow backups, washout, and drainage flow patterns for each project site.
- Compact any fills to prevent unequal settlement.
- Do not divert runoff onto other property without securing written authorization from the property owner.
- When possible, install and utilize permanent dikes, swales, and ditches early in the construction process.
- Provide stabilized outlets.

Earth Dikes

Temporary earth dikes are a practical, inexpensive BMP used to divert stormwater runoff. Temporary diversion dikes should be installed in the following manner:

- All dikes should be compacted by earth moving equipment.
- All dikes should have positive drainage to an outlet.
- All dikes should have 2:1 or flatter side slopes, 18 in. minimum height, and a minimum top width of 24 in. Wide top widths and flat slopes are usually needed at crossings for construction traffic.
- The outlet from the earth dike must function with a minimum of erosion. Runoff should be conveyed to a sediment trapping device such as a Sediment Trap (SE-3) or Sediment Basin (SE-2) when either the dike channel or the drainage area above the dike are not adequately stabilized.

- Temporary stabilization may be achieved using seed and mulching for slopes less than 5% and either rip-rap or sod for slopes in excess of 5%. In either case, stabilization of the earth dike should be completed immediately after construction or prior to the first rain.

- If riprap is used to stabilize the channel formed along the toe of the dike, the following typical specifications apply:

Channel Grade	Riprap Stabilization
0.5-1.0%	4 in. Rock
1.1-2.0%	6 in. Rock
2.1-4.0%	8 in. Rock
4.1-5.0%	8 in. -12 in. Riprap

- The stone riprap, recycled concrete, etc. used for stabilization should be pressed into the soil with construction equipment.

- Filter cloth may be used to cover dikes in use for long periods.

- Construction activity on the earth dike should be kept to a minimum.

Drainage Swales

Drainage swales are only effective if they are properly installed. Swales are more effective than dikes because they tend to be more stable. The combination of a swale with a dike on the downhill side is the most cost effective diversion.

Standard engineering design criteria for small open channel and closed conveyance systems should be used (see the local drainage design manual). Unless local drainage design criteria state otherwise, drainage swales should be designed as follows:

- No more than 5 acres may drain to a temporary drainage swale.

- Place drainage swales above or below, not on, a cut or fill slope.

- Swale bottom width should be at least 2 ft

- Depth of the swale should be at least 18 in.

- Side slopes should be 2:1 or flatter.

- Drainage or swales should be laid at a grade of at least 1 percent, but not more than 15 percent.

- The swale must not be overtopped by the peak discharge from a 10-year storm, irrespective of the design criteria stated above.

- Remove all trees, stumps, obstructions, and other objectionable material from the swale when it is built.

- Compact any fill material along the path of the swale.

- Stabilize all swales immediately. Seed and mulch swales at a slope of less than 5 percent, and use rip-rap or sod for swales with a slope between 5 and 15 percent. For temporary swales, geotextiles and mats (EC-7) may provide immediate stabilization.
- Irrigation may be required to establish sufficient vegetation to prevent erosion.
- Do not operate construction vehicles across a swale unless a stabilized crossing is provided.
- Permanent drainage facilities must be designed by a professional engineer (see the local drainage design criteria for proper design).
- At a minimum, the drainage swale should conform to predevelopment drainage patterns and capacities.
- Construct the drainage swale with a positive grade to a stabilized outlet.
- Provide erosion protection or energy dissipation measures if the flow out of the drainage swale can reach an erosive velocity.

Costs

- Cost ranges from $15 to $55 per ft for both earthwork and stabilization and depends on availability of material, site location, and access.
- Small dikes: $2.50 - $6.50/linear ft; Large dikes: $2.50/yd^3.
- The cost of a drainage swale increases with drainage area and slope. Typical swales for controlling internal erosion are inexpensive, as they are quickly formed during routine earthwork.

Inspection and Maintenance

- Inspect BMPs prior to forecast rain, daily during extended rain events, after rain events, weekly during the rainy season, and at two-week intervals during the non-rainy season.
- Inspect BMPs subject to non-stormwater discharges daily while non-stormwater discharges occur.
- Inspect ditches and berms for washouts. Replace lost riprap, damaged linings or soil stabilizers as needed.
- Inspect channel linings, embankments, and beds of ditches and berms for erosion and accumulation of debris and sediment. Remove debris and sediment and repair linings and embankments as needed.
- Temporary conveyances should be completely removed as soon as the surrounding drainage area has been stabilized or at the completion of construction

References

Erosion and Sediment Control Handbook, S.J. Goldman, K. Jackson, T.A. Bursetynsky, P.E., McGraw Hill Book Company, 1986.

Manual of Standards of Erosion and Sediment Control Measures, Association of Bay Area Governments, May 1995.

National Association of Home Builders (NAHB). Stormwater Runoff & Nonpoint Source Pollution Control Guide for Builders and Developers. National Association of Home Builders, Washington, D.C., 1995

National Management Measures to Control Nonpoint Source Pollution from Urban Areas, United States Environmental Protection Agency, 2002.

Southeastern Wisconsin Regional Planning Commission (SWRPC). Costs of Urban Nonpoint Source Water Pollution Control Measures. Technical Report No. 31. Southeastern Wisconsin Regional Planning Commission, Waukesha, WI. 1991

Stormwater Quality Handbooks Construction Site Best Management Practices (BMPs) Manual, State of California Department of Transportation (Caltrans), November 2000.

Stormwater Management of the Puget Sound Basin, Technical Manual, Publication #91-75, Washington State Department of Ecology, February 1992.

Water Quality Management Plan for the Lake Tahoe Region, Volume II, Handbook of Management Practices, Tahoe Regional Planning Agency, November 1988.

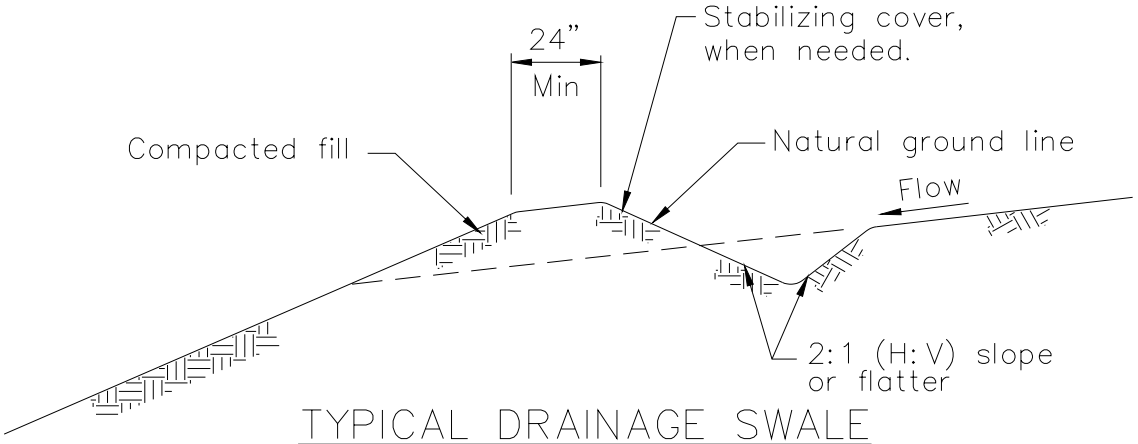

TYPICAL DRAINAGE SWALE
NOT TO SCALE

NOTES:

1. Stabilize inlet, outlets and slopes.
2. Properly compact the subgrade.

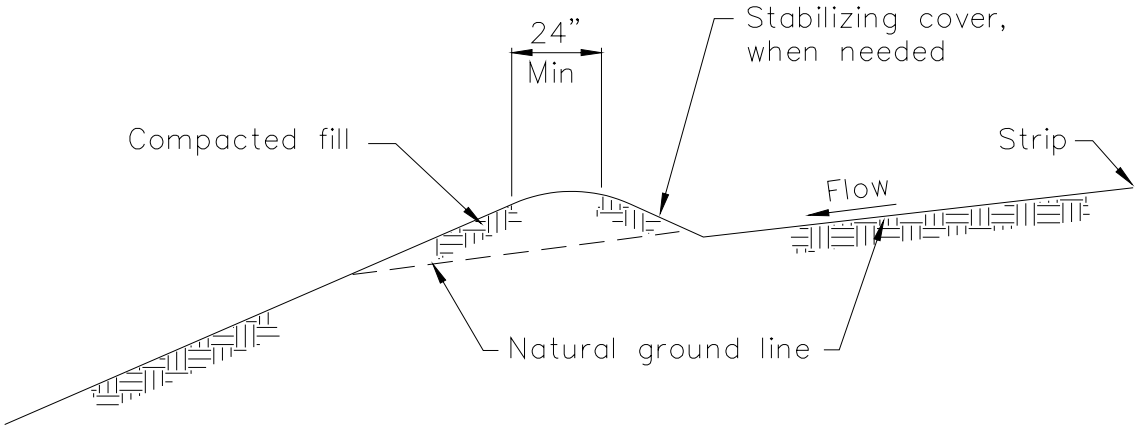

TYPICAL EARTH DIKE
NOT TO SCALE

Velocity Dissipation Devices EC-10

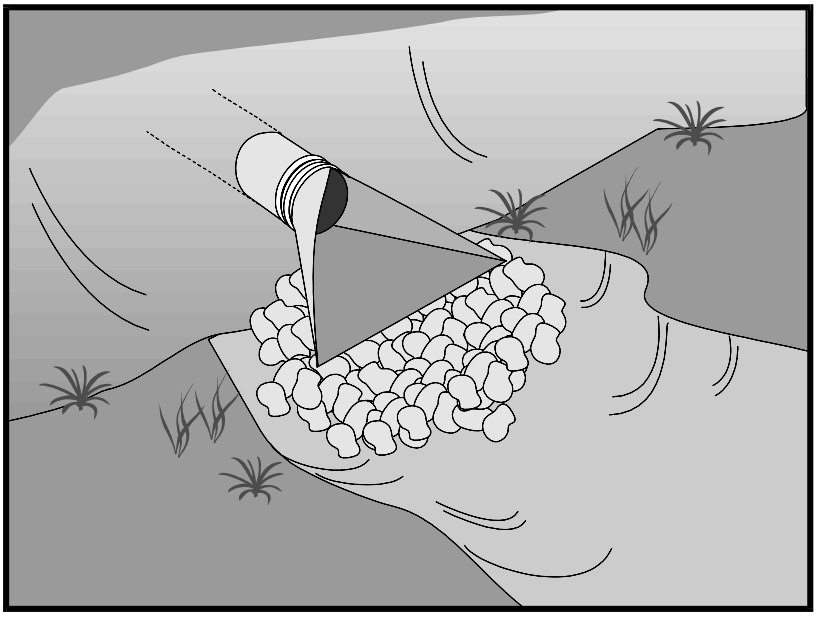

Objectives

EC	Erosion Control	☑
SE	Sediment Control	
TR	Tracking Control	
WE	Wind Erosion Control	
NS	Non-Stormwater Management Control	
WM	Waste Management and Materials Pollution Control	

Legend:

☑ **Primary Objective**

☒ **Secondary Objective**

Targeted Constituents

Sediment	☑
Nutrients	
Trash	
Metals	
Bacteria	
Oil and Grease	
Organics	

Potential Alternatives

None

Description and Purpose

Outlet protection is a physical device composed of rock, grouted riprap, or concrete rubble, which is placed at the outlet of a pipe or channel to prevent scour of the soil caused by concentrated, high velocity flows.

Suitable Applications

Whenever discharge velocities and energies at the outlets of culverts, conduits, or channels are sufficient to erode the next downstream reach. This includes temporary diversion structures to divert runon during construction.

- These devices may be used at the following locations:
  - Outlets of pipes, drains, culverts, slope drains, diversion ditches, swales, conduits, or channels.
  - Outlets located at the bottom of mild to steep slopes.
  - Discharge outlets that carry continuous flows of water.
  - Outlets subject to short, intense flows of water, such as flash floods.
  - Points where lined conveyances discharge to unlined conveyances

Limitations

- Large storms or high flows can wash away the rock outlet protection and leave the area susceptible to erosion.

- Sediment captured by the rock outlet protection may be difficult to remove without removing the rock.
- Outlet protection may negatively impact the channel habitat.
- Grouted riprap may break up in areas of freeze and thaw.
- If there is not adequate drainage, and water builds up behind grouted riprap, it may cause the grouted riprap to break up due to the resulting hydrostatic pressure.

Implementation

General

Outlet protection is needed where discharge velocities and energies at the outlets of culverts, conduits or channels are sufficient to erode the immediate downstream reach. This practice protects the outlet from developing small eroded pools (plange pools), and protects against gully erosion resulting from scouring at a culvert mouth.

Design and Layout

As with most channel design projects, depth of flow, roughness, gradient, side slopes, discharge rate, and velocity should be considered in the outlet design. Compliance to local and state regulations should also be considered while working in environmentally sensitive streambeds. General recommendations for rock size and length of outlet protection mat are shown in the rock outlet protection figure in this BMP and should be considered minimums. The apron length and rock size gradation are determined using a combination of the discharge pipe diameter and estimate discharge rate: Select the longest apron length and largest rock size suggested by the pipe size and discharge rate. Where flows are conveyed in open channels such as ditches and swales, use the estimated discharge rate for selecting the apron length and rock size. Flows should be same as the culvert or channel design flow but never the less than the peak 5 year flow for temporary structures planned for one rainy season, or the 10 year peak flow for temporary structures planned for two or three rainy seasons.

- There are many types of energy dissipaters, with rock being the one that is represented in the attached figure.
- Best results are obtained when sound, durable, and angular rock is used.
- Install riprap, grouted riprap, or concrete apron at selected outlet. Riprap aprons are best suited for temporary use during construction. Grouted or wired tied rock riprap can minimize maintenance requirements.
- Rock outlet protection is usually less expensive and easier to install than concrete aprons or energy dissipaters. It also serves to trap sediment and reduce flow velocities.
- Carefully place riprap to avoid damaging the filter fabric.
    - Stone 4 in. to 6 in. may be carefully dumped onto filter fabric from a height not to exceed 12 in.
    - Stone 8 in. to 12 in. must be hand placed onto filter fabric, or the filter fabric may be covered with 4 in. of gravel and the 8 in. to 12 in. rock may be dumped from a height not to exceed 16 in.

- Stone greater than 12 in. shall only be dumped onto filter fabric protected with a layer of gravel with a thickness equal to one half the D_{50} rock size, and the dump height limited to twice the depth of the gravel protection layer thickness.

- For proper operation of apron: Align apron with receiving stream and keep straight throughout its length. If a curve is needed to fit site conditions, place it in upper section of apron.

- Outlets on slopes steeper than 10 percent should have additional protection.

Costs

Costs are low if material is readily available. If material is imported, costs will be higher. Average installed cost is $150 per device.

Inspection and Maintenance

- Inspect BMPs prior to forecast rain, daily during extended rain events, after rain events, weekly during the rainy season, and at two-week intervals during the non-rainy season.

- Inspect BMPs subjected to non-stormwater discharges daily while non-stormwater discharges occur.

- Inspect apron for displacement of the riprap and damage to the underlying fabric. Repair fabric and replace riprap that has washed away. If riprap continues to wash away, consider using larger material.

- Inspect for scour beneath the riprap and around the outlet. Repair damage to slopes or underlying filter fabric immediately.

- Temporary devices should be completely removed as soon as the surrounding drainage area has been stabilized or at the completion of construction.

References

County of Sacramento Improvement Standards, Sacramento County, May 1989.

Erosion and Sediment Control Handbook, S.J. Goldman, K. Jackson, T.A. Bursztynsky, P.E., McGraw Hill Book Company, 1986.

Handbook of Steel Drainage & Highway Construction, American Iron and Steel Institute, 1983.

Manual of Standards of Erosion and Sediment Control Measures, Association of Bay Area Governments, May 1995.

Stormwater Quality Handbooks Construction Site Best Management Practices (BMPs) Manual, state of California Department of Transportation (Caltrans), November 2000.

Stormwater Management of the Puget Sound Basin, Technical Manual, Publication #91-75, Washington State Department of Ecology, February 1992.

Water Quality Management Plan for the Lake Tahoe Region, Volume II, Handbook of Management Practices, Tahoe Regional Planning Agency, November 1988.

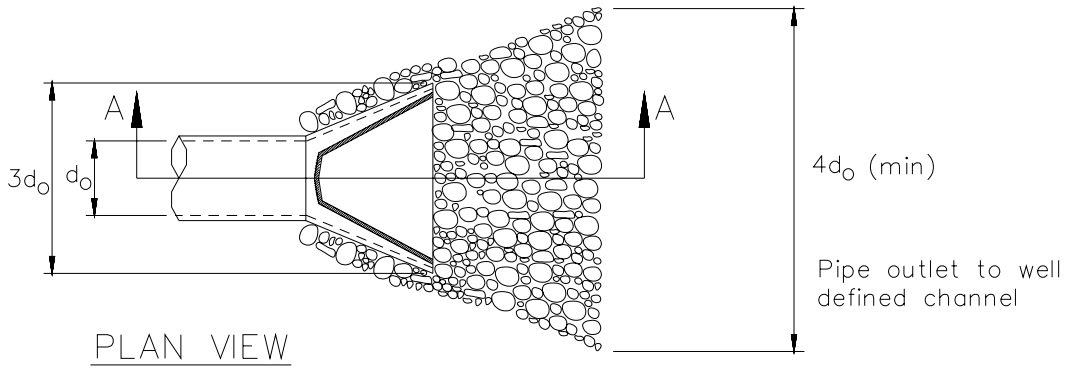

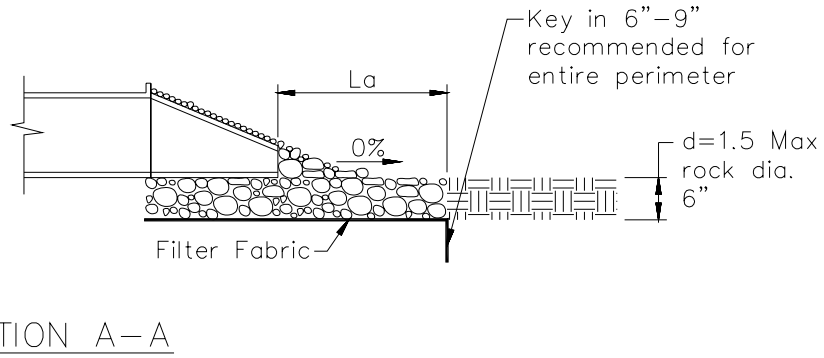

Pipe Diameter inches	Discharge ft^3/s	Apron Length, La ft	Rip Rap D_{50} Diameter Min inches
12	5	10	4
	10	13	6
18	10	10	6
	20	16	8
	30	23	12
	40	26	16
24	30	16	8
	40	26	8
	50	26	12
	60	30	16

For larger or higher flows consult a Registered Civil Engineer
Source: USDA - SCS

Slope Drains EC-11

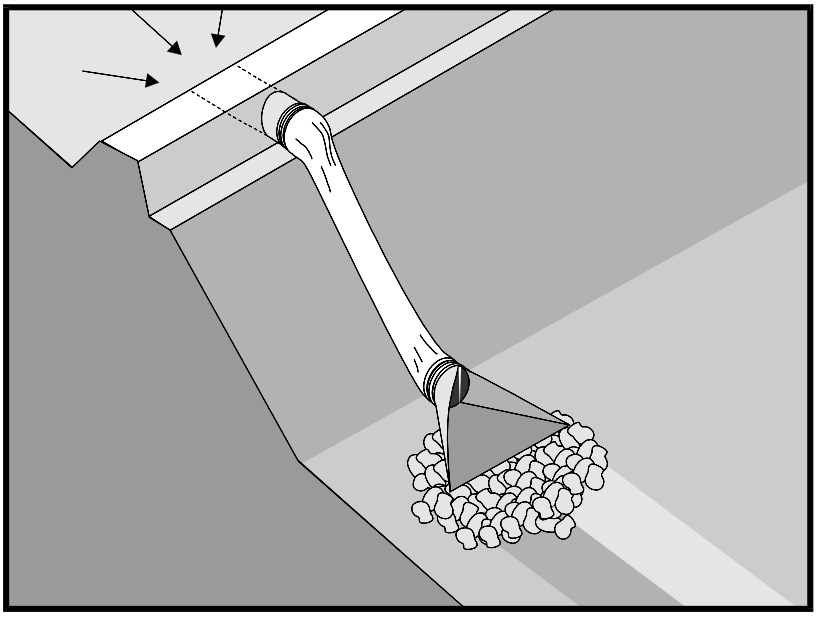

Objectives

EC	Erosion Control	☑
SE	Sediment Control	
TR	Tracking Control	
WE	Wind Erosion Control	
NS	Non-Stormwater Management Control	
WM	Waste Management and Materials Pollution Control	

Legend:

☑ **Primary Objective**

☒ **Secondary Objective**

Targeted Constituents

Sediment	☑
Nutrients	
Trash	
Metals	
Bacteria	
Oil and Grease	
Organics	

Potential Alternatives

EC-9 Earth Dike, Drainage Swales

Description and Purpose

A slope drain is a pipe used to intercept and direct surface runoff or groundwater into a stabilized watercourse, trapping device, or stabilized area. Slope drains are used with earth dikes and drainage ditches to intercept and direct surface flow away from slope areas to protect cut or fill slopes.

Suitable Applications

- Where concentrated flow of surface runoff must be conveyed down a slope in order to prevent erosion.
- Drainage for top of slope diversion dikes or swales.
- Drainage for top of cut and fill slopes where water can accumulate.
- Emergency spillway for a sediment basin.

Limitations

Installation is critical for effective use of the pipe slope drain to minimize potential gully erosion.

- Maximum drainage area per slope drain is 10 acres. (For large areas use a paved chute, rock lined channel, or additional pipes.)
- Severe erosion may result when slope drains fail by overtopping, piping, or pipe separation.

- During large storms, pipe slope drains may become clogged or over charged, forcing water around the pipe and causing extreme slope erosion.
- If the sectional downdrain is not sized correctly, the runoff can spill over the drain sides causing gully erosion and potential failure of the structure.

- Dissipation of high flow velocities at the pipe outlet is required to avoid downstream erosion.

Implementation

General

The slope drain is applicable for any construction site where concentrated surface runoff can accumulate and must be conveyed down the slope in order to prevent erosion. The slope drain is effective because it prevents the stormwater from flowing directly down the slope by confining all the runoff into an enclosed pipe or channel. Due to the time lag between grading slopes and installation of permanent stormwater collection systems and slope stabilization measures, temporary provisions to intercept runoff are sometimes necessary. Particularly in steep terrain, slope drains can protect unstabilized areas from erosion.

Installation

The slope drain may be a rigid pipe, such as corrugated metal, a flexible conduit, or a lined terrace drain with the inlet placed on the top of a slope and the outlet at the bottom of the slope. This BMP typically is used in combination with a diversion control, such as an earth dike or drainage swale at the top of the slope.

The following criteria must be considered when siting slope drains.

- Permanent structures included in the project plans can often serve as construction BMPs if implemented early. However, the permanent structure must meet or exceed the criteria for the temporary structure.
- Inlet structures must be securely entrenched and compacted to avoid severe gully erosion.
- Slope drains must be securely anchored to the slope and must be adequately sized to carry the capacity of the design storm and associated forces.
- Outlets must be stabilized with riprap, concrete or other type of energy dissipator, or directed into a stable sediment trap or basin. See EC-10, Velocity Dissipation Devices.
- Debris racks are recommended at the inlet. Debris racks located several feet upstream of the inlet can usually be larger than racks at the inlet, and thus provide enhanced debris protection and less plugging.
- Safety racks are also recommended at the inlet and outlet of pipes where children or animals could become entrapped.
- Secure inlet and surround with dikes to prevent gully erosion and anchor pipe to slope.
- When using slope drains, limit drainage area to 10 acres per pipe. For larger areas, use a rock lined channel or a series of pipes.

- Size to convey at least the peak flow of a 10-year storm. The design storm is conservative due to the potential impact of system failures.
- Maximum slope generally limited to 2:1 (H:V) as energy dissipation below steeper slopes is difficult.
- Direct surface runoff to slope drains with interceptor dikes. See BMP EC-9, Earth Dikes and Drainage Swales. Top of interceptor dikes should be 12 in. higher than the top of the slope drain.
- Slope drains can be placed on or buried underneath the slope surface.
- Recommended materials include both metal and plastic pipe, either corrugated or smooth wall. Concrete pipe can also be used.
- When installing slope drains:
  - Install slope drains perpendicular to slope contours.
  - Compact soil around and under entrance, outlet, and along length of pipe.
  - Securely anchor and stabilize pipe and appurtenances into soil.
  - Check to ensure that pipe connections are watertight.
  - Protect area around inlet with filter cloth. Protect outlet with riprap or other energy dissipation device. For high energy discharges, reinforce riprap with concrete or use reinforced concrete device.
  - Protect outlet of slope drains using a flared end section when outlet discharges to a flexible energy dissipation device.
  - A flared end section installed at the inlet will improve flow into the slope drain and prevent erosion at the pipe entrance. Use a flared end section with a 6 in. minimum toe plate to help prevent undercutting. The flared section should slope towards the pipe inlet.

Design and Layout

The capacity for temporary drains should be sufficient to convey at least the peak runoff from a 10-year rainfall event. The pipe size may be computed using the Rational Method or a method established by the local municipality. Higher flows must be safely stored or routed to prevent any offsite concentration of flow and any erosion of the slope. The design storm is purposely conservative due to the potential impacts associated with system failures.

As a guide, temporary pipe slope drains should not be sized smaller than shown in the following table:

Minimum Pipe Diameter (Inches)	Maximum Drainage Area (Acres)
12	1.0
18	3.0
21	5.0
24	7.0
30	10.0

Larger drainage areas can be treated if the area can be subdivided into areas of 10 acres or less and each area is treated as a separate drainage. Drainage areas exceeding 10 acres must be designed by a Registered Civil Engineer and approved by the agency that issued the grading permit.

Materials:

Soil type, rainfall patterns, construction schedule, local requirements, and available supply are some of the factors to be considered when selecting materials. The following types of slope drains are commonly used:

- **Rigid Pipe:** This type of slope drain is also known as a pipe drop. The pipe usually consists of corrugated metal pipe or rigid plastic pipe. The pipe is placed on undisturbed or compacted soil and secured onto the slope surface or buried in a trench. Concrete thrust blocks must be used when warranted by the calculated thrust forces. Collars should be properly installed and secured with metal strappings or watertight collars.

- **Flexible Pipe**: The flexible pipe slope drain consists of a flexible tube of heavy-duty plastic, rubber, or composite material. The tube material is securely anchored onto the slope surface. The tube should be securely fastened to the metal inlet and outlet conduit sections with metal strappings or watertight collars.

- **Section Downdrains**: The section downdrain consists of pre-fabricated, section conduit of half round or third round material. The sectional downdrain performs similar to a flume or chute. The pipe must be placed on undisturbed or compacted soil and secured into the slope.

- **Concrete-lined Terrace Drain:** This is a concrete channel for draining water from a terrace on a slope to the next level. These drains are typically specified as permanent structures and, if installed early, can serve as slope drains during construction, which should be designed according to local drainage design criteria.

Costs

- Cost varies based on pipe selection and selected outlet protection.

Corrugated Steel Pipes, Per Foot	
Size	Supplied and Installed Cost (No Trenching Included)
12”	$19.60 per LF
15”	$22.00
18”	$26.00
24”	$32.00
30”	$50.00
PVC Pipes, Per Foot	
Size	Supplied and Installed Cost (No Trenching Included)
12”	$24.50
14”	$49.00
16”	$51.00
18”	$54.00
20”	$66.00
24”	$93.00
30”	$130.00

Inspection and Maintenance

- Inspect BMPs prior to forecast rain, daily during extended rain events, after rain events, weekly during the rainy season, and at two-week intervals during the non-rainy season.
- Inspect BMPs subjected to non-stormwater discharges daily while non-stormwater discharges occur.
- Inspect outlet for erosion and downstream scour. If eroded, repair damage and install additional energy dissipation measures. If downstream scour is occurring, it may be necessary to reduce flows being discharged into the channel unless other preventative measures are implemented.
- Insert inlet for clogging or undercutting. Remove debris from inlet to maintain flows. Repair undercutting at inlet and if needed, install flared section or rip rap around the inlet to prevent further undercutting.
- Inspect pipes for leakage. Repair leaks and restore damaged slopes.
- Inspect slope drainage for accumulations of debris and sediment.
- Remove built up sediment from entrances and outlets as required. Flush drains if necessary; capture and settle out sediment from discharge.

- Make sure water is not ponding onto inappropriate areas (e.g., active traffic lanes, material storage areas, etc.).
- Pipe anchors must be checked to ensure that the pipe remains anchored to the slope. Install additional anchors if pipe movement is detected.

References

Draft – Sedimentation and Erosion Control, An Inventory of Current Practices, U.S.E.P.A., April 1990.

National Association of Home Builders (NAHB). Stormwater Runoff & Nonpoint Source Pollution Control Guide for Builders and Developers. National Association of Home Builders, Washington, D.C., 1995

National Management Measures to Control Nonpoint Source Pollution from Urban Areas, United States Environmental Protection Agency, 2002.

Stormwater Quality Handbooks Construction Site Best Management Practices (BMPs) Manual, State of California Department of Transportation (Caltrans), November 2000.

Stormwater Management of the Puget Sound Basin, Technical Manual, Publication #91-75, Washington State Department of Ecology, February 1992.

Water Quality Management Plan for the Lake Tahoe Region, Volume II, Handbook of Management Practices, Tahoe Regional Planning Agency, November 1988.

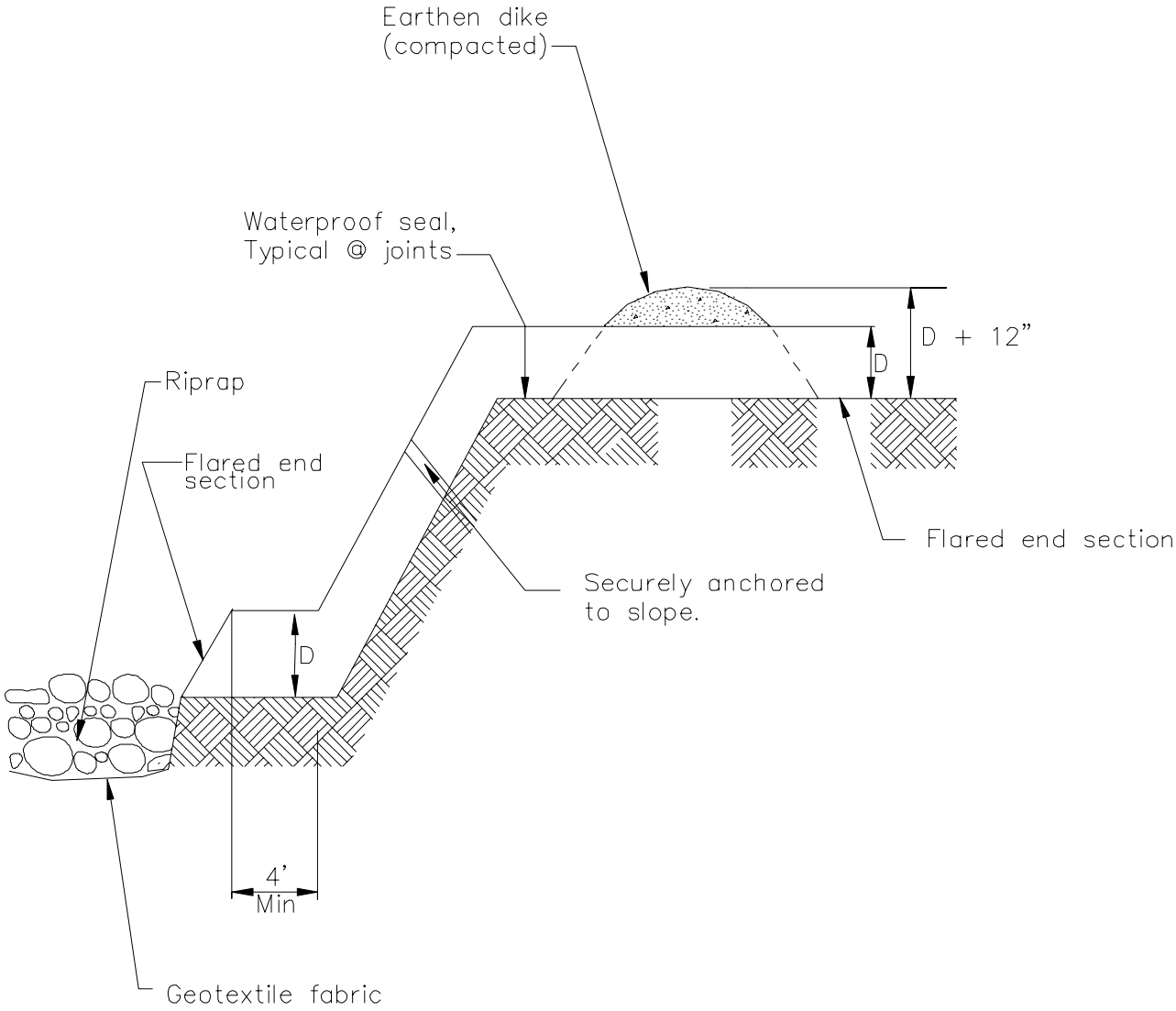

TYPICAL SLOPE DRAIN
NOT TO SCALE

Streambank Stabilization EC-12

Objectives

EC	Erosion Control	☑
SE	Sediment Control	☒
TR	Tracking Control	
WE	Wind Erosion Control	
NS	Non-Stormwater Management Control	☒
WM	Waste Management and Materials Pollution Control	

Legend:

☑ **Primary Objective**

☒ **Secondary Objective**

Targeted Constituents

Sediment	☑
Nutrients	
Trash	
Metals	
Bacteria	
Oil and Grease	
Organics	

Potential Alternatives

Combination of erosion and sediment controls.

Description and Purpose

Stream channels, streambanks, and associated riparian areas are dynamic and sensitive ecosystems that respond to changes in land use activity. Streambank and channel disturbance resulting from construction activities can increase the stream's sediment load, which can cause channel erosion or sedimentation and have adverse affects on the biotic system. BMPs can reduce the discharge of sediment and other pollutants to minimize the impact of construction activities on watercourses. Streams on the 303(d) list and listed for sediment may require numerous measures to prevent any increases in sediment load to the stream.

Suitable Applications

These procedures typically apply to all construction projects that disturb or occur within stream channels and their associated riparian areas.

Limitations

Specific permit requirements or mitigation measures such as Regional Water Quality Control Board (RWQCB) 401 Certification, U.S. Army Corps of Engineers 404 permit and approval by California Department of Fish and Game supercede the guidance in this BMP.

- If numerical based water quality standards are mentioned in any of these and other related permits, testing and sampling may be required. Streams listed as 303(d) impaired for sediment, silt, or turbidity, are required to conduct sampling

to verify that there is no net increase in sediment load due to construction activities.

Implementation

Planning

- Proper planning, design, and construction techniques can minimize impacts normally associated with in stream construction activities. Poor planning can adversely affect soil, fish, wildlife resources, land uses, or land users. Planning should take into account: scheduling; avoidance of in-stream construction; minimizing disturbance area and construction time period; using pre-disturbed areas; selecting crossing location; and selecting equipment.

Scheduling

- Construction activities should be scheduled according to the relative sensitivity of the environmental concerns and in accordance with EC-1, Scheduling. Scheduling considerations will be different when working near perennial streams vs. ephemeral streams and are as follows.

- When in-stream construction is conducted in a perennial stream, work should optimally be performed during the rainy season. This is because in the summer, any sediment-containing water that is discharged into the watercourse will cause a large change in both water clarity and water chemistry. During the rainy season, there is typically more and faster flowing water in the stream so discharges are diluted faster. However, should in-stream work be scheduled for summer, establishing an isolation area, or diverting the stream, will significantly decrease the amount of sediment stirred up by construction work. Construction work near perennial streams should optimally be performed during the dry season (see below).

- When working in or near ephemeral streams, work should be performed during the dry season. By their very nature, ephemeral streams are usually dry in the summer, and therefore, in-stream construction activities will not cause significant water quality problems. However, when tying up the site at the end of the project, wash any fines (see Washing Fines) that accumulated in the channel back into the bed material, to decrease pollution from the first rainstorm of the season.

- When working near ephemeral or perennial streams, erosion and sediment controls (see silt fences, straw bale barriers, etc.) should be implemented to keep sediment out of stream channel.

Minimize Disturbance

- Minimize disturbance through: selection of the narrowest crossing location; limiting the number of equipment trips across a stream during construction; and, minimizing the number and size of work areas (equipment staging areas and spoil storage areas). Place work areas at least 50 ft from stream channel. Field reconnaissance should be conducted during the planning stage to identify work areas.

Use of Pre-Disturbed Areas

- Locate project sites and work areas in areas disturbed by prior construction or other activity when possible.

Selection of Project Site

- Avoid steep and unstable banks, highly erodible or saturated soils, or highly fractured rock.
- Select project site that minimizes disturbance to aquatic species or habitat.

Equipment Selection

- Select equipment that reduces the amount of pressure exerted on the ground surface, and therefore, reduces erosion potential and/or use overhead or aerial access for transporting equipment across drainage channels. Use equipment that exerts ground pressures of less than 5 or 6 lb/in^2, where possible. Low ground pressure equipment includes: wide or high flotation tires (34 to 72 in. wide); dual tires; bogie axle systems; tracked machines; lightweight equipment; and, central tire inflation systems.

Streambank Stabilization

Preservation of Existing Vegetation

- Preserve existing vegetation in accordance with EC-2, Preservation of Existing Vegetation. In a streambank environment, preservation of existing vegetation provides the following benefits.

Water Quality Protection

- Vegetated buffers on slopes trap sediment and promote groundwater recharge. The buffer width needed to maintain water quality ranges from 15 to 100 ft. On gradual slopes, most of the filtering occurs within the first 30 ft. Steeper slopes require a greater width of vegetative buffer to provide water quality benefits.

Streambank Stabilization

- The root system of riparian vegetation stabilizes streambanks by increasing tensile strength in the soil. The presence of vegetation modifies the moisture condition of slopes (infiltration, evapo transpiration, interception) and increases bank stability.

Riparian Habitat

- Buffers of diverse riparian vegetation provide food and shelter for riparian and aquatic organisms. Minimizing impacts to fisheries habitat is a major concern when working near streams and rivers. Riparian vegetation provides shade, shelter, organic matter (leaf detritus and large woody debris), and other nutrients that are necessary for fish and other aquatic organisms. Buffer widths for habitat concerns are typically wider than those recommended for water quality concerns (100 to 1500 ft).
- When working near watercourses, it is important to understand the work site's placement in the watershed. Riparian vegetation in headwater streams has a greater impact on overall water quality than vegetation in downstream reaches. Preserving existing vegetation upstream is necessary to maintain water quality, minimize bank failure, and maximize riparian habitat, downstream of the work site.

Limitations

- Local county and municipal ordinances regarding width, extent and type of vegetative buffer required may exceed the specifications provided here; these ordinances should be investigated prior to construction.

Streambank Stabilization Specific Installation

- As a general rule, the width of a buffer strip between a road and the stream is recommended to be 50 ft plus four times the percent slope of the land, measured between the road and the top of stream bank.

Hydraulic Mulch

- Apply hydraulic mulch on disturbed streambanks above mean high water level in accordance with EC-3, Hydraulic Mulch to provide temporary soil stabilization.

Limitations

- Do not place hydraulic mulch or tackifiers below the mean high water level, as these materials could wash into the channel and impact water quality or possibly cause eutrophication (eutrophication is an algal bloom caused by excessively high nutrient levels in the water).

Hydroseeding

- Hydroseed disturbed streambanks in accordance with EC-4, Hydroseeding.

Limitations

- Do not place tackifiers or fertilizers below the mean high water level, as these materials could wash into the channel and impact water quality or possibly cause eutrophication.

Soil Binders

- Apply soil binders to disturbed streambanks in accordance with EC-5, Soil Binders.

Limitations

- Do not place soil binders below the mean high water level. Soil binder must be environmentally benign and non-toxic to aquatic organisms.

Straw Mulch

- Apply straw mulch to disturbed streambanks in accordance with EC-6, Straw Mulch.

Limitations

- Do not place straw mulch below the mean high water level, as this material could wash into the channel and impact water quality or possibly cause eutrophication.

Geotextiles and Mats

- Install geotextiles and mats as described in EC-7, Geotextiles and Mats, to stabilize disturbed channels and streambanks. Not all applications should be in the channel, for example, certain geotextile netting may snag fish gills and are not appropriate in fish bearing streams. Geotextile fabrics that are not biodegradable are not appropriate for in stream use. Additionally, geotextile fabric or blankets placed in channels must be adequate to sustain anticipated hydraulic forces.

Earth Dikes, Drainage Swales, and Lined Ditches

- Convey, intercept, or divert runoff from disturbed streambanks using EC-9, Earth Dikes and Drainage Swales.

Limitations

- Do not place earth dikes in watercourses, as these structures are only suited for intercepting sheet flow, and should not be used to intercept concentrated flow.

- Appropriately sized velocity dissipation devices (EC-10) must be placed at outlets to minimize erosion and scour.

Velocity Dissipation Devices

- Place velocity dissipation devices at outlets of pipes, drains, culverts, slope drains, diversion ditches, swales, conduits or channels in accordance with EC-10, Velocity Dissipation Devices.

Slope Drains

- Use slope drains to intercept and direct surface runoff or groundwater into a stabilized watercourse, trapping device or stabilized area in accordance with EC-11, Slope Drains.

Limitations

- Appropriately sized outlet protection and velocity dissipation devices (EC-10) must be placed at outlets to minimize erosion and scour.

Streambank Sediment Control

Silt Fences

- Install silt fences in accordance with SE-1, Silt Fence, to control sediment. Silt fences should only be installed where sediment laden water can pond, thus allowing the sediment to settle out.

Fiber Rolls

- Install fiber rolls in accordance with SE-5, Fiber Rolls, along contour of slopes above the high water level to intercept runoff, reduce flow velocity, release the runoff as sheet flow and provide removal of sediment from the runoff. In a stream environment, fiber rolls should be used in conjunction with other sediment control methods such as SE-1, Silt Fence or SE-9 Straw Bale Barrier. Install silt fence, straw bale barrier, or other erosion control method along toe of slope above the high water level.

Gravel Bag Berm

- A gravel bag berm or barrier can be utilized to intercept and slow the flow of sediment laden sheet flow runoff in accordance with SE-6, Gravel Bag Berm. In a stream environment gravel bag barriers can allow sediment to settle from runoff before water leaves the construction site and can be used to isolate the work area from the live stream.

Limitations

- Gravel bag barriers are not recommended as a perimeter sediment control practice around streams.

Straw Bale Barrier

- Install straw bale barriers in accordance with SE-9, Straw Bale Barrier, to control sediment. Straw bale barriers should only be installed where sediment laden water can pond, thus allowing the sediment to settle out. Install a silt fence in accordance with SE-1, Silt Fence,

on down slope side of straw bale barrier closest to stream channel to provide added sediment control.

Rock Filter

Description and Purpose

Rock filters are temporary erosion control barriers composed of rock that is anchored in place. Rock filters detain the sediment laden runoff, retain the sediment, and release the water as sheet flow at a reduced velocity. Typical rock filter installations are illustrated at the end of this BMP.

Applications

- Near the toe of slopes that may be subject to flow and rill erosion.

Limitations

- Inappropriate for contributing drainage areas greater than 5 acres.
- Requires sufficient space for ponded water.
- Ineffective for diverting runoff because filters allow water to slowly seep through.
- Rock filter berms are difficult to remove when construction is complete.
- Unsuitable in developed areas or locations where aesthetics is a concern.

Specifications

- Rock: open graded rock, 0.75 to 5 in. for concentrated flow applications.
- Woven wire sheathing: 1 in. diameter, hexagonal mesh, galvanized 20gauge (used with rock filters in areas of concentrated flow).
- In construction traffic areas, maximum rock berm heights should be 12 in. Berms should be constructed every 300 ft on slopes less than 5%, every 200 ft on slopes between 5% and 10%, and every 100 ft on slopes greater than 10%.

Maintenance

- Inspect and verify that activity-based BMPs are in place prior to the commencement of associated activities. While activities associated with the BMP are under way, inspect weekly during the rainy season and at two-week intervals in the non-rainy season to verify continued BMP implementation.
- Inspect BMPs subject to non-stormwater discharges daily while non-stormwater discharges occur.
- Reshape berms as needed and replace lost or dislodged rock, and filter fabric.
- Sediment that accumulates in the BMP must be periodically removed in order to maintain BMP effectiveness. Sediment should be removed when the sediment accumulation reaches one third of the barrier height. Sediment removed during maintenance may be incorporated into earthwork on the site or disposed at an appropriate location.

K-rail

Description and Purpose

This is temporary sediment control that uses K-rails to form the sediment deposition area, or to isolate the near bank construction area. Install K-rails at toe of slope in accordance with procedures described in NS-5, Clear Water Diversion.

Barriers are placed end to end in a pre-designed configuration and gravel filled bags are used at the toe of the barrier and at their abutting ends to seal and prevent movement of sediment beneath or through the barrier walls.

Appropriate Applications

- This technique is useful at the toe of embankments, cuts or fills slopes.

Limitations

- The K-rail method should not be used to dewater a project site, as the barrier is not watertight.

Implementation

- Refer to NS-5, Clear Water Diversion, for implementation requirements.

Instream Construction Sediment Control

There are three different options currently available for reducing turbidity while working in a stream or river. The stream can be isolated from the area in which work is occurring by means of a water barrier, the stream can be diverted around the work site through a pipe or temporary channel, or one can employ construction practices that minimize sediment suspension.

Whatever technique is implemented, an important thing to remember is that dilution can sometimes be the solution. A probable "worst time" to release high TSS into a stream system might be when the stream is very low; summer low flow, for example. During these times, the flow may be low while the biological activity in the stream is very high. Conversely, the addition of high TSS or sediment during a big storm discharge might have a relatively low impact, because the stream is already turbid, and the stream energy is capable of transporting both suspended solids, and large quantities of bedload through the system. The optimum time to "pull" in-stream structures may be during the rising limb of a storm hydrograph.

Techniques to minimize Total Suspended Solids (TSS)

- **Padding** - Padding laid in the stream below the work site may trap some solids that are deposited in the stream during construction. After work is done, the padding is removed from the stream, and placed on the bank to assist in re-vegetation.

- **Clean, washed gravel** - Using clean, washed gravel decreases solid suspension, as there are fewer small particles deposited in the stream.

- **Excavation using a large bucket** - Each time a bucket of soil is placed in the stream, a portion is suspended. Approximately the same amount is suspended whether a small amount of soil is placed in the stream, or a large amount. Therefore, using a large excavator bucket instead of a small one, will reduce the total amount of soil that washes downstream.

- **Use of dozer for backfilling** - Using a dozer for backfilling instead of a backhoe follows the same principles – the fewer times soil is deposited in the stream, the less soil will be suspended.

- **Partial dewatering with a pump** - Partially dewatering a stream with a pump reduces the amount of water, and thus the amount of water that can suspend sediment.

Washing Fines

Definition and Purpose

- Washing fines is an "in-channel" sediment control method, which uses water, either from a water truck or hydrant, to wash stream fines that were brought to the surface of the channel bed during restoration, back into the interstitial spaces of the gravel and cobbles.

- The purpose of this technique is to reduce or eliminate the discharge of sediment from the channel bottom during the first seasonal flow. Sediment should not be allowed into stream channels; however, occasionally in-channel restoration work will involve moving or otherwise disturbing fines (sand and silt sized particles) that are already in the stream, usually below bankfull discharge elevation. Subsequent re-watering of the channel can result in a plume of turbidity and sedimentation.

- This technique washes the fines back into the channel bed. Bedload materials, including gravel cobbles, boulders and those fines, are naturally mobilized during higher storm flows. This technique is intended to delay the discharge until the fines would naturally be mobilized.

Appropriate Applications

- This technique should be used when construction work is required in channels. It is especially useful in intermittent or ephemeral streams in which work is performed "in the dry", and which subsequently become re-watered.

Limitations

- The stream must have sufficient gravel and cobble substrate composition.

- The use of this technique requires consideration of time of year and timing of expected stream flows.

- The optimum time for the use of this technique is in the fall, prior to winter flows.

- Consultation with, and approval from the Department of Fish and Game and the Regional Water Quality Control Board may be required.

Implementation

- Apply sufficient water to wash fines, but not cause further erosion or runoff.

- Apply water slowly and evenly to prevent runoff and erosion.

- Consult with Department of Fish and Game and the Regional Water Quality Control Board for specific water quality requirements of applied water (e.g. chlorine).

Inspection and Maintenance

- None necessary

Costs

Cost may vary according to the combination of practices implemented.

Inspection and Maintenance

- Inspect and verify that activity-based BMPs are in place prior to the commencement of associated activities. While activities associated with the BMP are under way, inspect weekly during the rainy season and at two-week intervals in the non-rainy season to verify continued BMP implementation.
- Inspect BMPs subject to non-stormwater discharges daily while non-stormwater discharges occur.
- Inspect and repair equipment (for damaged hoses, fittings, and gaskets).

References

Manual of Standards of Erosion and Sediment Control Measures, Association of Bay Area Governments, May 1995.

Proposed Guidance Specifying Management Measures for Sources of Nonpoint Pollution in Coastal Waters, Work Group Working Paper, USEPA, April 1992.

Sedimentation and Erosion Control Practices, An Inventory of Current Practices (Draft), UESPA, 1990.

Stormwater Quality Handbooks Construction Site Best Management Practices (BMPs) Manual, State of California Department of Transportation (Caltrans), November 2000.

Stormwater Management for Construction Activities, Developing Pollution Prevention Plans and Best Management Practices, EPA 832-R-92005; USEPA, April 1992.

Water Quality Management Plan for the Lake Tahoe Region, Volume II, Handbook of Management Practices, Tahoe Regional Planning Agency, November 1988.

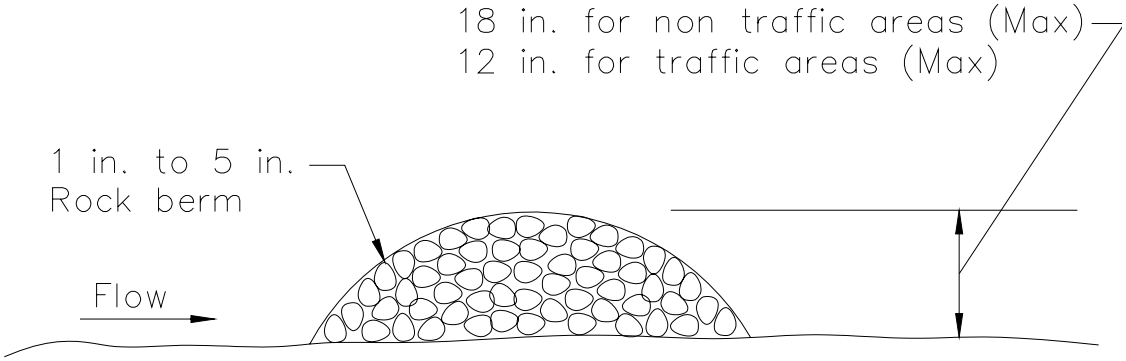

SECTION

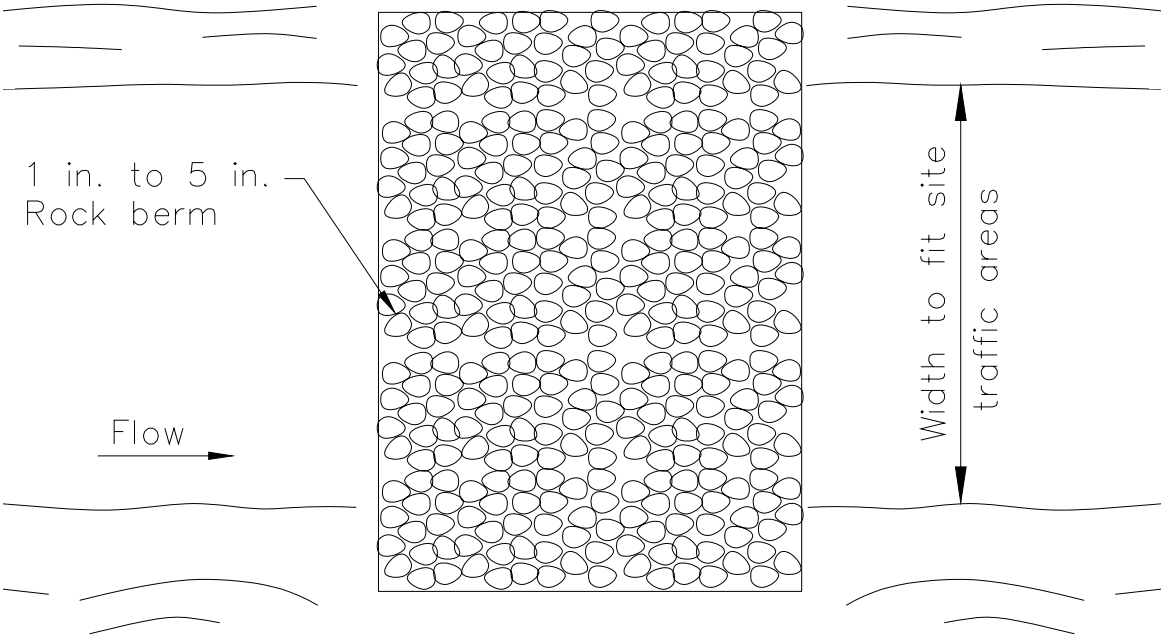

PLAN

TYPICAL ROCK FILTER

NOT TO SCALE

Polyacrylamide EC-13

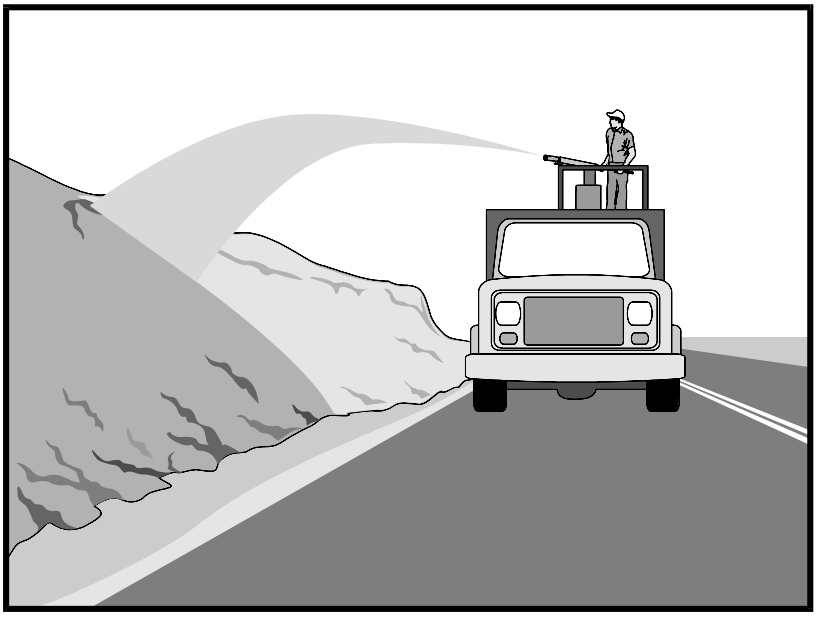

Objectives

EC	Erosion Control
SE	Sediment Control
TR	Tracking Control
WE	Wind Erosion Control
NS	Non-Stormwater Management Control
WM	Waste Management and Materials Pollution Control

Legend:

☑ **Primary Objective**

☒ **Secondary Objective**

Targeted Constituents

Sediment
Nutrients
Trash
Metals
Bacteria
Oil and Grease
Organics

Potential Alternatives

None

Description and Purpose

Polyacrylamide (PAM) is a chemical that can be applied to disturbed oils at construction sites to reduce erosion and improve settling of suspended sediment.

PAM increases the soil's available pore volume, thus increasing infiltration and reducing the quantity of stormwater runoff that can cause erosion. Suspended sediments from PAM treated soils exhibit increased flocculation over untreated soils. The increased flocculation aids in their deposition, thus reducing stormwater runoff turbidity and improving water quality.

Suitable Applications

PAM is suitable for use on disturbed soil areas that discharge to a sediment trap or sediment basin. PAM is typically used in conjunction with other BMPs to increase their performance.

PAM can be applied to the following areas:

- Rough graded soils that will be inactive for a period of time.
- Final graded soils before application of final stabilization (e.g., paving, planting, mulching).
- Temporary haul roads prior to placement of crushed rock surfacing.
- Compacted soil road base.
- Construction staging, materials storage, and layout areas.

- Soil stockpiles.
- Areas that will be mulched.

Limitations

- There is limited experience in California with use of PAM for erosion and sediment control.
- PAM shall not be directly applied to water or allowed to enter a water body.
- Do not use PAM on a slope that flows into a water body without passing through a sediment trap or sediment basin.
- PAM will work when applied to saturated soil but is not as effective as applications to dry or damp soil.
- Some PAMs are more toxic and carcinogenic than others. Only the most environmentally safe PAM products should be used.
- The specific PAM copolymer formulation must be anionic. **Cationic PAM shall not be used in any application because of known aquatic toxicity problems**. Only the highest drinking water grade PAM, certified for compliance with ANSI/NSF Standard 60 for drinking water treatment, will be used for soil applications.
- PAM designated for erosion and sediment control should be "water soluble" or "linear" or "non-cross linked".
- A sampling and analysis plan must be incorporated into the SWPPP as PAM may be considered to be a source of non-visible pollutants.

Implementation

General

PAM shall be used in accordance with the following general guidance:

- Pam shall be used in conjunction with other BMPs and not in place of other BMPs, including both erosion controls and sediment controls.
- Stormwater runoff from PAM treated soils should pass through a sediment control BMP prior to discharging to surface waters.
  - When the total drainage area is greater than or equal to 5 acres, PAM treated areas shall drain to a sediment basin.
  - Areas less than 5 acres shall drain to sediment control BMPs, such as a sediment trap, or a minimum of 3 check dams per acre. The total number of check dams used shall be maximized to achieve the greatest amount of settlement of sediment prior to discharging from the site. Each check dam shall be spaced evenly in the drainage channel. Through which stormwater flows are discharged off site.
- Do not add PAM to water discharging from site.

- On PAM treated sites, the use of silt fence and fiber rolls shall be maximized to limit the discharges of sediment to sediment traps and sediment basins.
- All areas not being actively worked one should be covered and protected from rainfall. PAM should not be the only cover BMP used.
- PAM can be applied to wet soil, but dry soil is preferred due to less sediment loss.
- Keep the granular PAM supply out of the sun. Granular PAM loses its effectiveness in three months after exposure to sunlight and air.
- Proper application and re-application plans are necessary to ensure total effectiveness of PAM usage.
- PAM, combined with water, is very slippery and can be a safety hazard. Care must be taken to prevent spills of PAM powder onto paved surfaces. During an application of PAM, prevent over spray from reaching pavement, as pavement will become slippery. If PAM powder gets on skin or clothing, wipe it off with a rough towel rather than washing with water this only makes cleanup messier and longer.
- Recent high interest in PAM has resulted in some entrepreneurial exploitation of the term "polymer". All PAMs are polymer, but not all polymers are PAM, and not all PAM products comply with ANSI/NSF Standard 60. PAM use shall be reviewed and approved by the local permitting authority.
- The PAM anionic charge density may vary from 2-30%; a value of 18% is typical. Studies conducted by the United States Department of Agriculture (USDA)/ Agricultural Research Service (ARS) demonstrated that soil stabilization was optimized by using very high molecular weight (12-15 mg/mole), highly anionic (>20% hydrolosis) PAM.
- PAM tackifiers are available and being used in place of guar and alpha plantago. Typically, PAM tackifiers should be used at a rate of no more than 0.5-1 lb per 1,000 gallons of water in hydro mulch machine. Some tackifier product instructions say to use at a rate of 3-5 lbs per acre, which can be too much. In addition, pump problems can occur at higher rates due to increased viscosity.

Preferred Application Method

PAM may be applied in dissolved form with water, or it may be applied in dry, granular, or powered form. The preferred application method is the dissolved form.

PAM is to be applied at a maximum rate of ½ pound PAM per 1000 gallons water per 1 acre of bare soil. Table 1 and Figure 1 can be used to determine the PAM and water application rate for a disturbed soil area. Higher concentrations of PAM **do not** provide any additional effectiveness.

Table 1 PAM and Water Application Rates

Disturbed Area (acre)	PAM (lbs)	Water (gallons)
0.50	0.25	500
1.00	0.50	1,000
1.50	0.75	1,500
2.00	1.00	2,000
2.50	1.25	2,500
3.00	1.50	3,000
3.50	1.75	3,500
4.00	2.00	4,000
4.50	2.25	4,500
5.00	2.50	5,000

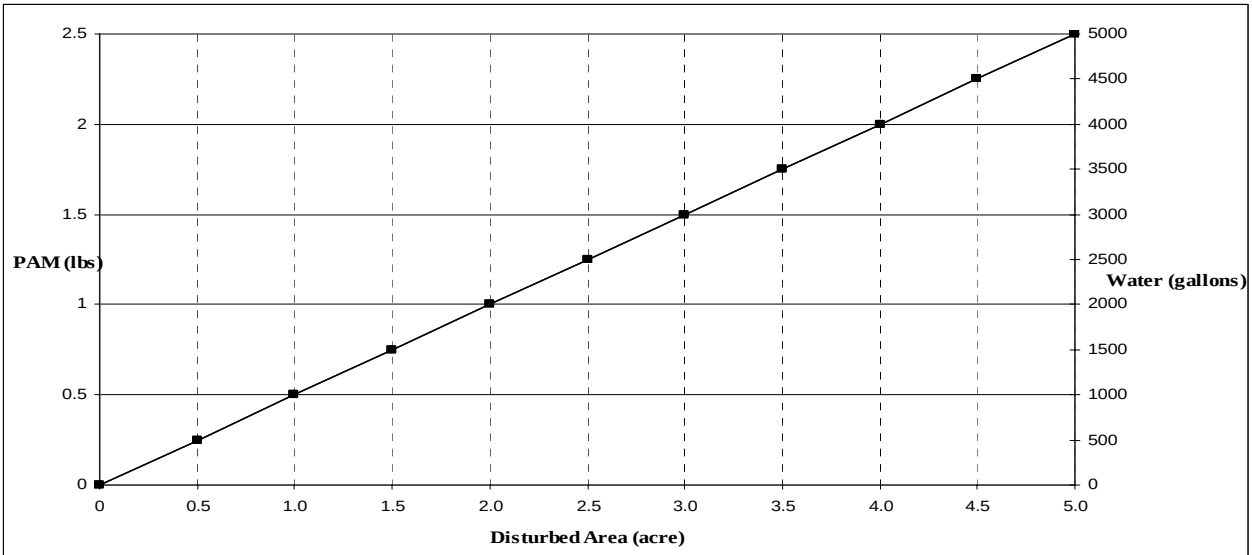

Figure 1 - PAM and Water Application Rates

- Pre-measure the area where PAM is to be applied and calculate the amount of product and water necessary to provide coverage at the specified application rate (1/2 pound PAM/1000 gallons/acre).
- PAM has infinite solubility in water, but dissolves very slowly. Dissolve pre-measured dry granular PAM with a known quantity of clean water in a bucket several hours or overnight. Mechanical mixing will help dissolve the PAM. Always add PAM to water – not water to PAM.

- Pre-fill the water truck about 1/8 full with water. The water does not have to be potable, but it must have relatively low turbidity – in the range of 20 NTU or less.
- Add the dissolved PAM and water mixture to the truck.
- Fill the water truck to specified volume for the amount of PAM to be applied.
- Spray the PAM/water mixture onto dry soil until the soil surface is uniformly and completely wetted.

Alternate Application Method

PAM may also be applied as a powder at the rate of 5 lbs per acre. This must be applied on a day that is dry. For areas less than 5-10 acres, a hand held "organ grinder" fertilizer spreader set to the smallest setting will work. Tractor mounted spreaders will work for larger areas.

Costs

- PAM: $1.30 - $5.50/lb (material cost only).

Inspection and Maintenance

- Inspect BMPs prior to forecast rain, daily during extended rain events, after rain events, weekly during the rainy season, and at two-week intervals during the non-rainy season.
- Areas where erosion is evident should be repaired and BMPs re-applied as soon as possible. Care should be exercised to minimize the damage to protected areas while making repairs, as any area damaged will require re-application of BMPs.
- PAM must be reapplied on actively worked areas after a 48-hour period if PAM is to remain effective.
- Reapplication is not required unless PAM treated soil is disturbed or unless turbidity levels show the need for an additional application.
- If PAM treated soil is left undisturbed a reapplication may be necessary after two months.
- More PAM applications may be required for steep slopes, silty and clayey soils (USDA Classification Type "C" and "D" soils), long grades, and high precipitation areas.
- When PAM is applied first to bare soil and then covered with straw, a reapplication may not be necessary for several months.
- Discharges from PAM treated areas must be monitored for non-visible pollutants.

References

Entry, J.A., and R.E. Sojka. Polyacrylamide Application to Soil Reduces the Movement of Microorganisms in Water. In 1999 Proceedings of the International Irrigation Show. Irrigation Associations, Orlando, FL, November, 1999.

National Management Measures to Control Nonpoint Source Pollution from Urban Areas, United States Environmental Protection Agency, 2002.

Stormwater Quality Handbooks Construction Site Best Management Practices (BMPs) Manual, State of California Department of Transportation (Caltrans), November 2000.

Sojka, R.E., and R.D. Lentz, eds. Managing Irrigation Induced Erosion and Infiltration with Polyacrylamide. In Proceedings from Conference held at College of Southern Idaho, Twin Falls, Idaho, University of Idaho Miscellaneous Publication No. 101-96, May, 1996

Stormwater Management Manual for Western Washington, Volume II – Construction Stormwater Pollution Prevention, Washington State Department of Ecology, August 2001.

Silt Fence SE-1

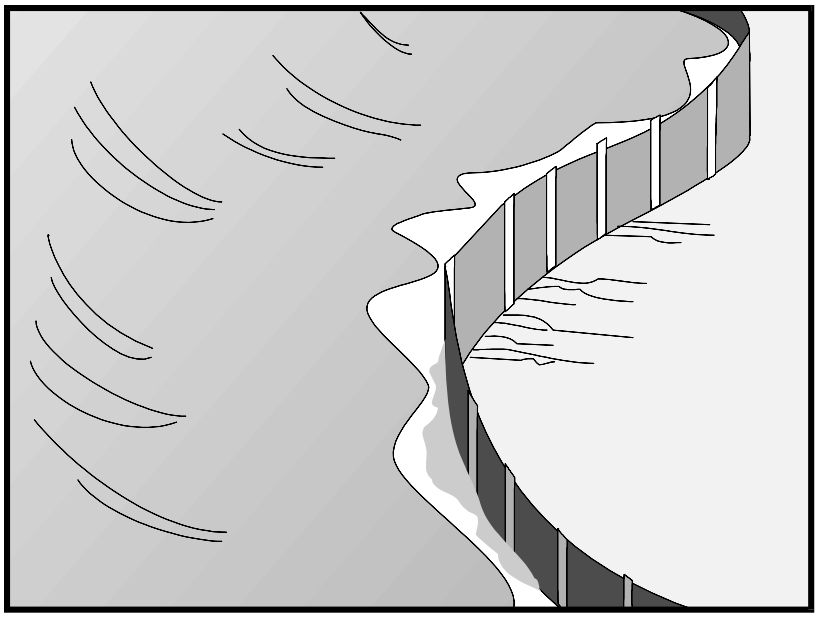

Objectives

EC	Erosion Control	☑
SE	Sediment Control	
TR	Tracking Control	
WE	Wind Erosion Control	
NS	Non-Stormwater Management Control	
WM	Waste Management and Materials Pollution Control	

Legend:

☑ **Primary Objective**

☒ **Secondary Objective**

Targeted Constituents

Sediment	☑
Nutrients	
Trash	
Metals	
Bacteria	
Oil and Grease	
Organics	

Potential Alternatives

SE-5 Fiber Rolls

SE-6 Gravel Bag Berm

SE-8 Sandbag Barrier

SE-9 Straw Bale Barrier

Description and Purpose

A silt fence is made of a filter fabric that has been entrenched, attached to supporting poles, and sometimes backed by a plastic or wire mesh for support. The silt fence detains sediment-laden water, promoting sedimentation behind the fence.

Suitable Applications

Silt fences are suitable for perimeter control, placed below areas where sheet flows discharge from the site. They should also be used as interior controls below disturbed areas where runoff may occur in the form of sheet and rill erosion. Silt fences are generally ineffective in locations where the flow is concentrated and are only applicable for sheet or overland flows. Silt fences are most effective when used in combination with erosion controls. Suitable applications include:

- Along the perimeter of a project.
- Below the toe or down slope of exposed and erodible slopes.
- Along streams and channels.
- Around temporary spoil areas and stockpiles.
- Below other small cleared areas.

Limitations

- Do not use in streams, channels, drain inlets, or anywhere flow is concentrated.

- Do not use in locations where ponded water may cause flooding.
- Do not place fence on a slope, or across any contour line. If not installed at the same elevation throughout, silt fences will create erosion.
- Filter fences will create a temporary sedimentation pond on the upstream side of the fence and may cause temporary flooding. Fences not constructed on a level contour will be overtopped by concentrated flow resulting in failure of the filter fence.
- Improperly installed fences are subject to failure from undercutting, overlapping, or collapsing.
  - Not effective unless trenched and keyed in.
  - Not intended for use as mid-slope protection on slopes greater than 4:1 (H:V).
  - Do not allow water depth to exceed 1.5 ft at any point.

Implementation

General

A silt fence is a temporary sediment barrier consisting of filter fabric stretched across and attached to supporting posts, entrenched, and, depending upon the strength of fabric used, supported with plastic or wire mesh fence. Silt fences trap sediment by intercepting and detaining small amounts of sediment-laden runoff from disturbed areas in order to promote sedimentation behind the fence.

Silt fences are preferable to straw bale barriers in many cases. Laboratory work at the Virginia Highway and Transportation Research Council has shown that silt fences can trap a much higher percentage of suspended sediments than can straw bales. While the failure rate of silt fences is lower than that of straw bale barriers, there are many instances where silt fences have been improperly installed. The following layout and installation guidance can improve performance and should be followed:

- Use principally in areas where sheet flow occurs.
- Don't use in streams, channels, or anywhere flow is concentrated. Don’t use silt fences to divert flow.
- Don't use below slopes subject to creep, slumping, or landslides.
- Select filter fabric that retains 85% of soil by weight, based on sieve analysis, but that is not finer than an equivalent opening size of 70.
- Install along a level contour, so water does not pond more than 1.5 ft at any point along the silt fence.
- The maximum length of slope draining to any point along the silt fence should be 200 ft or less.
- The maximum slope perpendicular to the fence line should be 1:1.

- Provide sufficient room for runoff to pond behind the fence and to allow sediment removal equipment to pass between the silt fence and toes of slopes or other obstructions. About 1200 ft^2 of ponding area should be provided for every acre draining to the fence.
- Turn the ends of the filter fence uphill to prevent stormwater from flowing around the fence.
- Leave an undisturbed or stabilized area immediately down slope from the fence where feasible.
- Silt fences should remain in place until the disturbed area is permanently stabilized.

Design and Layout

Selection of a filter fabric is based on soil conditions at the construction site (which affect the equivalent opening size (EOS) fabric specification) and characteristics of the support fence (which affect the choice of tensile strength). The designer should specify a filter fabric that retains the soil found on the construction site yet that it has openings large enough to permit drainage and prevent clogging. The following criteria is recommended for selection of the equivalent opening size:

1. If 50 percent or less of the soil, by weight, will pass the U.S. Standard Sieve No. 200, select the EOS to retain 85 % of the soil. The EOS should not be finer than EOS 70.
2. For all other soil types, the EOS should be no larger than the openings in the U.S. Standard Sieve No. 70 except where direct discharge to a stream, lake, or wetland will occur, then the EOS should be no larger than Standard Sieve No. 100.

To reduce the chance of clogging, it is preferable to specify a fabric with openings as large as allowed by the criteria. No fabric should be specified with an EOS smaller than U.S. Standard Sieve No. 100. If 85% or more of a soil, by weight, passes through the openings in a No. 200 sieve, filter fabric should not be used. Most of the particles in such a soil would not be retained if the EOS was too large and they would clog the fabric quickly if the EOS were small enough to capture the soil.

The fence should be supported by a plastic or wire mesh if the fabric selected does not have sufficient strength and bursting strength characteristics for the planned application (as recommended by the fabric manufacturer). Filter fabric material should contain ultraviolet inhibitors and stabilizers to provide a minimum of six months of expected usable construction life at a temperature range of 0 °F to 120 °F.

- Layout in accordance with attached figures.
- For slopes steeper than 2:1 (H:V) and that contain a high number of rocks or large dirt clods that tend to dislodge, it may be necessary to install additional protection immediately adjacent to the bottom of the slope, prior to installing silt fence. Additional protection may be a chain link fence or a cable fence.
- For slopes adjacent to sensitive receiving waters or Environmentally Sensitive Areas (ESAs), silt fence should be used in conjunction with erosion control BMPs.

Materials

- Silt fence fabric should be woven polypropylene with a minimum width of 36 in. and a minimum tensile strength of 100 lb force. The fabric should conform to the requirements in ASTM designation D4632 and should have an integral reinforcement layer. The reinforcement layer should be a polypropylene, or equivalent, net provided by the manufacturer. The permittivity of the fabric should be between 0.1 sec^{-1} and 0.15 sec^{-1} in conformance with the requirements in ASTM designation D4491.

- Wood stakes should be commercial quality lumber of the size and shape shown on the plans. Each stake should be free from decay, splits or cracks longer than the thickness of the stake or other defects that would weaken the stakes and cause the stakes to be structurally unsuitable.

- Staples used to fasten the fence fabric to the stakes should be not less than 1.75 in. long and should be fabricated from 15 gauge or heavier wire. The wire used to fasten the tops of the stakes together when joining two sections of fence should be 9 gauge or heavier wire. Galvanizing of the fastening wire will not be required.

- There are new products that may use prefabricated plastic holders for the silt fence and use bar reinforcement instead of wood stakes. If bar reinforcement is used in lieu of wood stakes, use number four or greater bar. Provide end protection for any exposed bar reinforcement.

Installation Guidelines

Silt fences are to be constructed on a level contour. Sufficient area should exist behind the fence for ponding to occur without flooding or overtopping the fence.

- A trench should be excavated approximately 6 in. wide and 6 in. deep along the line the proposed silt fence.

- Bottom of the silt fence should be keyed-in a minimum of 12 in.

- Posts should be spaced a maximum of 6 ft apart and driven securely into the ground a minimum of 18 in. or 12 in. below the bottom of the trench.

- When standard strength filter fabric is used, a plastic or wire mesh support fence should be fastened securely to the upslope side of posts using heavy–duty wire staples at least 1 in. long. The mesh should extend into the trench. When extra-strength filter fabric and closer post spacing are used, the mesh support fence may be eliminated. Filter fabric should be purchased in a long roll, then cut to the length of the barrier. When joints are necessary, filter cloth should be spliced together only at a support post, with a minimum 6 in. overlap and both ends securely fastened to the post.

- The trench should be backfilled with compacted native material.

- Construct silt fences with a setback of at least 3 ft from the toe of a slope. Where a silt fence is determined to be not practicable due to specific site conditions, the silt fence may be constructed at the toe of the slope, but should be constructed as far from the toe of the slope as practicable. Silt fences close to the toe of the slope will be less effective and difficult to maintain.

- Construct the length of each reach so that the change in base elevation along the reach does not exceed 1/3 the height of the barrier; in no case should the reach exceed 500 ft.

Costs

- Average annual cost for installation and maintenance (assumes 6 month useful life): $7 per lineal foot ($850 per drainage acre). Range of cost is $3.50 - $9.10 per lineal foot.

Inspection and Maintenance

- Inspect BMPs prior to forecast rain, daily during extended rain events, after rain events, weekly during the rainy season, and at two-week intervals during the non-rainy season.
- Repair undercut silt fences.
- Repair or replace split, torn, slumping, or weathered fabric. The lifespan of silt fence fabric is generally 5 to 8 months.
- Silt fences that are damaged and become unsuitable for the intended purpose should be removed from the site of work, disposed of, and replaced with new silt fence barriers.
- Sediment that accumulates in the BMP must be periodically removed in order to maintain BMP effectiveness. Sediment should be removed when the sediment accumulation reaches one-third of the barrier height. Sediment removed during maintenance may be incorporated into earthwork on the site or disposed at an appropriate location.
- Silt fences should be left in place until the upstream area is permanently stabilized. Until then, the silt fence must be inspected and maintained.
- Holes, depressions, or other ground disturbance caused by the removal of the silt fences should be backfilled and repaired.

References

Manual of Standards of Erosion and Sediment Control Measures, Association of Bay Area Governments, May 1995.

National Management Measures to Control Nonpoint Source Pollution from Urban Areas, United States Environmental Protection Agency, 2002.

Proposed Guidance Specifying Management Measures for Sources of Nonpoint Pollution in Coastal Waters, Work Group-Working Paper, USEPA, April 1992.

Sedimentation and Erosion Control Practices, and Inventory of Current Practices (Draft), UESPA, 1990.

Southeastern Wisconsin Regional Planning Commission (SWRPC). Costs of Urban Nonpoint Source Water Pollution Control Measures. Technical Report No. 31. Southeastern Wisconsin Regional Planning Commission, Waukesha, WI. 1991

Stormwater Quality Handbooks - Construction Site Best Management Practices (BMPs) Manual, State of California Department of Transportation (Caltrans), November 2000.

Stormwater Management Manual for The Puget Sound Basin, Washington State Department of Ecology, Public Review Draft, 1991.

U.S. Environmental Protection Agency (USEPA). Stormwater Management for Industrial Activities: Developing Pollution Prevention Plans and Best Management Practices. U.S. Environmental Protection Agency, Office of Water, Washington, DC, 1992.

Water Quality Management Plan for the Lake Tahoe Region, Volume II, Handbook of Management Practices, Tahoe Regional Planning Agency, November 1988.

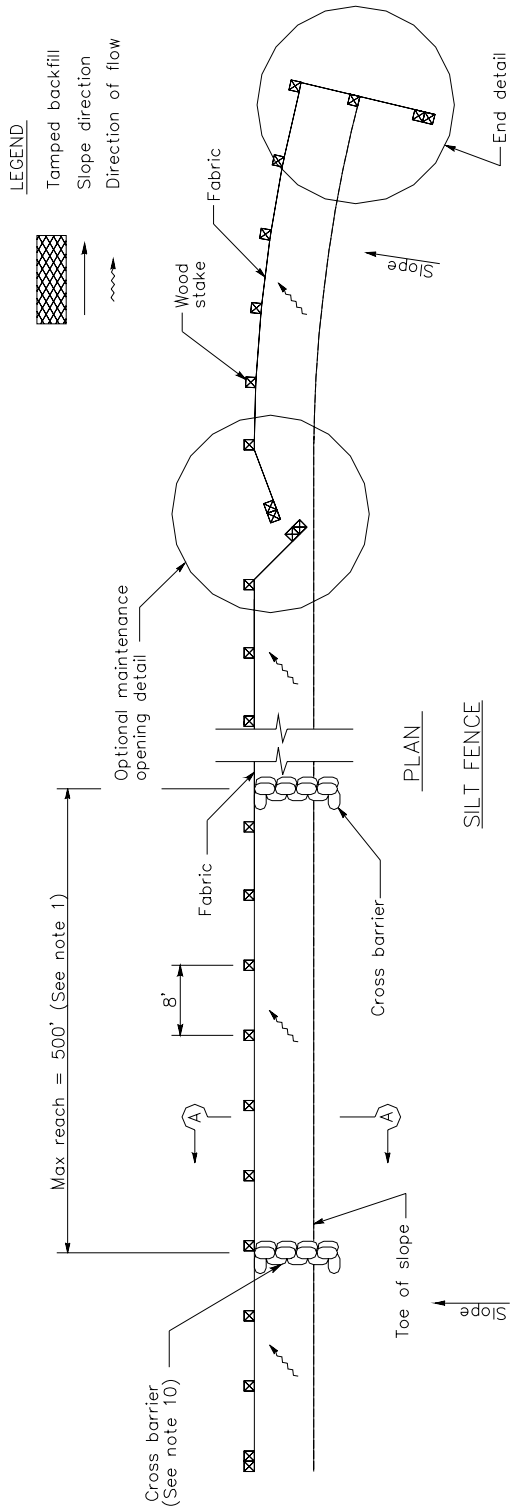

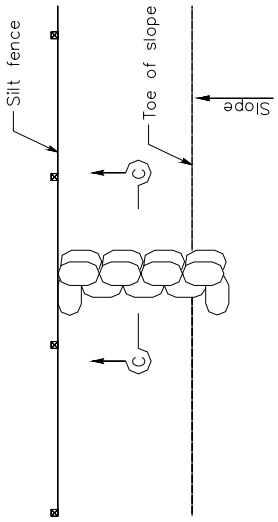

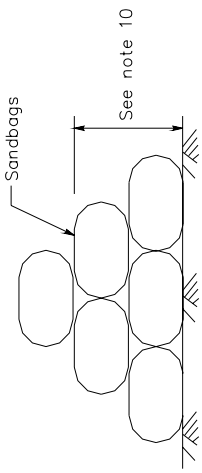

NOTES

1. Construct the length of each reach so that the change in base elevation along the reach does not exceed 1/3 the height of the linear barrier, in no case shall the reach length exceed 500'.
2. The last 8'–0" of fence shall be turned up slope.
3. Stake dimensions are nominal.
4. Dimension may vary to fit field condition.
5. Stakes shall be spaced at 8'–0" maximum and shall be positioned on downstream side of fence.
6. Stakes to overlap and fence fabric to fold around each stake one full turn. Secure fabric to stake with 4 staples.
7. Stakes shall be driven tightly together to prevent potential flow–through of sediment at joint. The tops of the stakes shall be secured with wire.
8. For end stake, fence fabric shall be folded around two stakes one full turn and secured with 4 staples.
9. Minimum 4 staples per stake. Dimensions shown are typical.
10. Cross barriers shall be a minimum of 1/3 and a maximum of 1/2 the height of the linear barrier.
11. Maintenance openings shall be constructed in a manner to ensure sediment remains behind silt fence.
12. Joining sections shall not be placed at sump locations.
13. Sandbag rows and layers shall be offset to eliminate gaps.

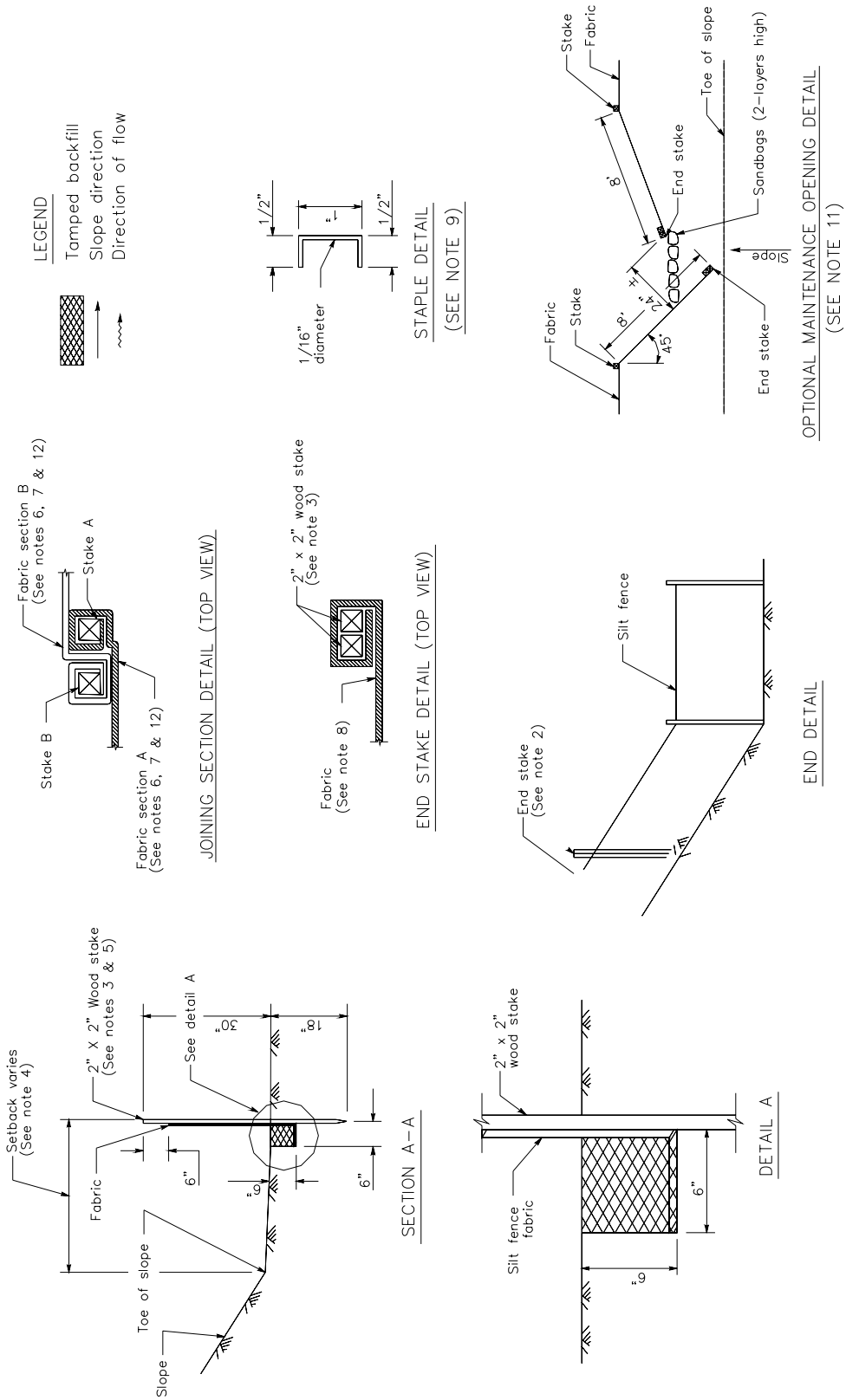
LEGEND
Tamped backfill
Slope direction
Direction of flow
1/2"
1"
1/2"
1/16" diameter
STAPLE DETAIL
(SEE NOTE 9)
Stake
Fabric
Toe of slope
Sandbags (2-layers high)
End stake
8'
24"
8'
45°
Slope
Fabric
Stake
End stake
OPTIONAL MAINTENANCE OPENING DETAIL
(SEE NOTE 11)
Fabric section B
(See notes 6, 7 & 12)
Stake A
Stake B
Fabric section A
(See notes 6, 7 & 12)
JOINING SECTION DETAIL (TOP VIEW)
2" x 2" wood stake
(See note 3)
Fabric
(See note 8)
END STAKE DETAIL (TOP VIEW)
Silt fence
End stake
(See note 2)
END DETAIL
Setback varies
(See note 4)
2" X 2" Wood stake
(See notes 3 & 5)
See detail A
30"
10"
Fabric
6"
6"
6"
Toe of slope
Slope
SECTION A–A
2" x 2"
wood stake
Silt fence
fabric
6"
6"
DETAIL A

Sediment Basin SE-2

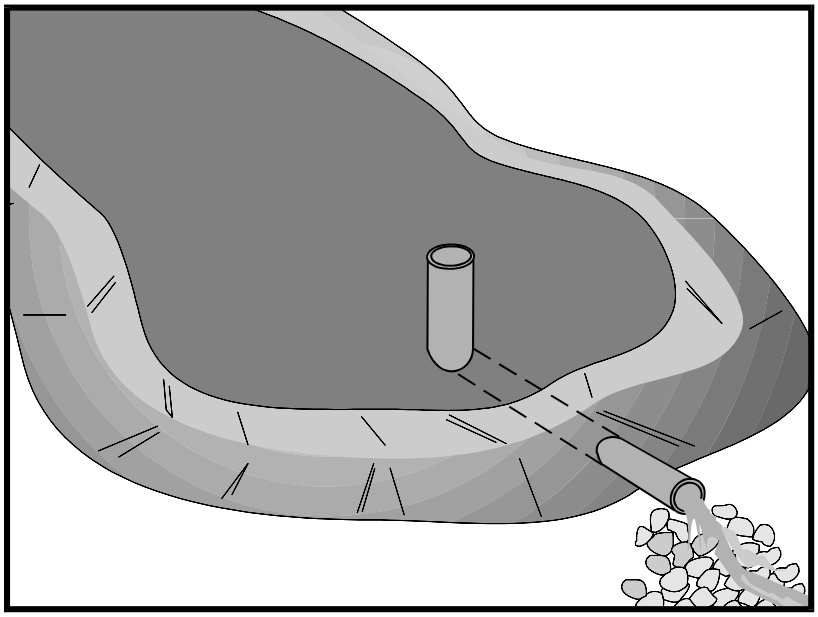

Objectives

EC	Erosion Control	
SE	Sediment Control	☑
TR	Tracking Control	
WE	Wind Erosion Control	
NS	Non-Stormwater Management Control	
WM	Waste Management and Materials Pollution Control	

Legend:

☑ **Primary Objective**

☒ **Secondary Objective**

Targeted Constituents

Sediment	☑
Nutrients	
Trash	☑
Metals	
Bacteria	
Oil and Grease	
Organics	

Potential Alternatives

SE-3 Sediment Trap (for smaller areas)

Description and Purpose

A sediment basin is a temporary basin formed by excavation or by constructing an embankment so that sediment-laden runoff is temporarily detained under quiescent conditions, allowing sediment to settle out before the runoff is discharged.

Suitable Applications

Sediment basins may be suitable for use on larger projects with sufficient space for constructing the basin. Sediment basins should be considered for use:

- Where sediment-laden water may enter the drainage system or watercourses
- On construction projects with disturbed areas during the rainy season
- At the outlet of disturbed watersheds between 5 acres and 75 acres
- At the outlet of large disturbed watersheds, as necessary
- Where post construction detention basins are required
- In association with dikes, temporary channels, and pipes used to convey runoff from disturbed areas

Limitations

Sediment basins must be installed only within the property limits and where failure of the structure will not result in loss of life, damage to homes or buildings, or interruption of use or service of

public roads or utilities. In addition, sediment basins are attractive to children and can be very dangerous. Local ordinances regarding health and safety must be adhered to. If fencing of the basin is required, the type of fence and its location should be shown in the SWPPP and in the construction specifications.

- Generally, sediment basins are limited to drainage areas of 5 acres or more, but not appropriate for drainage areas greater than 75 acres.
- Sediment basins may become an "attractive nuisance" and care must be taken to adhere to all safety practices. If safety is a concern, basin may require protective fencing.
- Sediment basins designed according to this handbook are only practically effective in removing sediment down to about the medium silt size fraction. Sediment-laden runoff with smaller size fractions (fine silt and clay) may not be adequately treated unless chemical treatment is used in addition to the sediment basin.
- Sites with very fine sediments (fine silt and clay) may require longer detention times for effective sediment removal.
- Basins with a height of 25 ft or more or an impounding capacity of 50 ac-ft or more must obtain approval from Division of Safety of Dams.
- Standing water may cause mosquitoes or other pests to breed.
- Basins require large surface areas to permit settling of sediment. Size may be limited by the available area.

Implementation

General

A sediment basin is a controlled stormwater release structure formed by excavation or by construction of an embankment of compacted soil across a drainage way, or other suitable location. It is intended to trap sediment before it leaves the construction site. The basin is a temporary measure with a design life of 12 to 28 months in most cases and is to be maintained until the site area is permanently protected against erosion or a permanent detention basin is constructed.

Sediment basins are suitable for nearly all types of construction projects. Whenever possible, construct the sediment basins before clearing and grading work begins. Basins should be located at the stormwater outlet from the site but not in any natural or undisturbed stream. A typical application would include temporary dikes, pipes, and/or channels to divert runoff to the basin inlet.

Many development projects in California will be required by local ordinances to provide a stormwater detention basin for post-construction flood control, desilting, or stormwater pollution control. A temporary sediment basin may be constructed by rough grading the post-construction control basins early in the project.

Sediment basins trap 70-80 % of the sediment that flows into them if designed according to this handbook. Therefore, they should be used in conjunction with erosion control practices such as

temporary seeding, mulching, diversion dikes, etc., to reduce the amount of sediment flowing into the basin.

Planning

To improve the effectiveness of the basin, it should be located to intercept runoff from the largest possible amount of disturbed area. The best locations are generally low areas. Drainage into the basin can be improved by the use of earth dikes and drainage swales (see BMP EC-9). The basin must not be located in a stream but it should be located to trap sediment-laden runoff before it enters the stream. The basin should not be located where its failure would result in the loss of life or interruption of the use or service of public utilities or roads.

- Construct before clearing and grading work begins when feasible.
- Do not locate in a stream.
- Basin sites should be located where failure of the structure will not cause loss of life, damage to homes or buildings, or interruption of use or service of public roads or utilities.
- Large basins are subject to state and local dam safety requirements.
- Limit the contributing area to the sediment basin to only the runoff from the disturbed soil areas. Use temporary concentrated flow conveyance controls to divert runoff from undisturbed areas away from the sediment basin.
- The basin should be located: (1) by excavating a suitable area or where a low embankment can be constructed across a swale, (2) where post-construction (permanent) detention basins will be constructed, and (3) where the basins can be maintained on a year-round basis to provide access for maintenance, including sediment removal and sediment stockpiling in a protected area, and to maintain the basin to provide the required capacity.

Design

Sediment basins must be designed in accordance with Section A of the State of California NPDES General Permit for Stormwater Discharges Associated with Construction Activities (General Permit) where sediment basins are the only control measure proposed for the site. If there is insufficient area to construct a sediment basin in accordance with the General Permit requirements, then the alternate design standards specified herein may be used.

Sediment basins designed per the General Permit shall be designed as follows:

Option 1:

Pursuant to local ordinance for sediment basin design and maintenance, provided that the design efficiency is as protective or more protective of water quality than Option 3.

OR

Option 2:

Sediment basin(s), as measured from the bottom of the basin to the principal outlet, shall have at least a capacity equivalent to 3,600 cubic feet (133 yd^3) of storage per acre draining into the sediment basin. The length of the basin shall be more than twice the width of the basin. The

length is determined by measuring the distance between the inlet and the outlet; and the depth must not be less than 3 ft nor greater than 5 ft for safety reasons and for maximum efficiency.

OR

Option 3:
Sediment basin(s) shall be designed using the standard equation:

$$As=1.2Q/Vs \qquad \text{(Eq. 1)}$$

Where:

As = Minimum surface area for trapping soil particles of a certain size

Vs = Settling velocity of the design particle size chosen

Q = C I A

Where

Q = Discharge rate measured in cubic feet per second

C = Runoff coefficient

I = Precipitation intensity for the 10-year, 6-hour rain event

A = Area draining into the sediment basin in acres

The design particle size shall be the smallest soil grain size determined by wet sieve analysis, or the fine silt sized (0.01 mm [or 0.0004 in.]) particle, and the *Vs* used shall be 100 percent of the calculated settling velocity.

The length is determined by measuring the distance between the inlet and the outlet; the length shall be more than twice the dimension as the width; the depth shall not be less than 3 ft nor greater than 5 ft for safety reasons and for maximum efficiency (2 ft of sediment storage, 2 ft of capacity). The basin(s) shall be located on the site where it can be maintained on a year-round basis and shall be maintained on a schedule to retain the 2 ft of capacity.

OR

Option 4:
The use of an equivalent surface area design or equation, provided that the design efficiency is as protective or more protective of water quality than Option 3.

Other design considerations are:

- The volume of the settling zone should be sized to capture runoff from a 2-year storm or other appropriate design storms specified by the local agency. A detention time of 24 to 40 hours should allow 70 to 80 % of sediment to settle.
- The basin volume consists of two zones:
  - A sediment storage zone at least 1 ft deep.
  - A settling zone at least 2 ft deep.
- The length to settling depth ratio (L/SD) should be less than 200.
- Sediment basins are best used in conjunction with erosion controls. Sediment basins that will be used as the only means of treatment, without upstream erosion and sediment controls, must be designed according to the four options required by the General Permit (see Options 1-4 above). Sediment basins that are used in conjunction with upstream erosion and sediment controls should be designed to have a capacity equivalent to 67 yd^3 of sediment storage per acre of contributory area.
- The length of the basin should be more than twice the width of the basin; the length should be determined by measuring the distance between the inlet and the outlet.
- The depth must be no less than 3 ft.
- Basins with an impounding levee greater than 4.5 ft tall, measured from the lowest point to the impounding area to the highest point of the levee, and basins capable of impounding more than 35,000 ft^3, should be designed by a Registered Civil Engineer. The design should include maintenance requirements, including sediment and vegetation removal, to ensure continuous function of the basin outlet and bypass structures.
- Basins should be designed to drain within 72 hours following storm events. If a basin fails to drain within 72 hours, it must be pumped dry.
- Sediment basins, regardless of size and storage volume, should include features to accommodate overflow or bypass flows that exceed the design storm event.
  - Include an emergency spillway to accommodate flows not carried by the principal spillway. The spillway should consist of an open channel (earthen or vegetated) over undisturbed material (not fill) or constructed of a non-erodible riprap.
  - The spillway control section, which is a level portion of the spillway channel at the highest elevation in the channel, should be a minimum of 20 ft in length.
- Rock or vegetation should be used to protect the basin inlet and slopes against erosion.
- A forebay, constructed upstream of the basin may be provided to remove debris and larger particles.

- The outflow from the sediment basin should be provided with velocity dissipation devices (see BMP EC-10) to prevent erosion and scouring of the embankment and channel.
- Basin inlets should be located to maximize travel distance to the basin outlet.
- The principal outlet should consist of a corrugated metal, high density polyethylene (HDPE), or reinforced concrete riser pipe with dewatering holes and an anti-vortex device and trash rack attached to the top of the riser, to prevent floating debris from flowing out of the basin or obstructing the system. This principal structure should be designed to accommodate the inflow design storm.
- A rock pile or rock-filled gabions can serve as alternatives to the debris screen; although the designer should be aware of the potential for extra maintenance involved should the pore spaces in the rock pile clog.
- The outlet structure should be placed on a firm, smooth foundation with the base securely anchored with concrete or other means to prevent floatation.
- Attach riser pipe (watertight connection) to a horizontal pipe (barrel). Provide anti-seep collars on the barrel.
- Cleanout level should be clearly marked on the riser pipe.
- Proper hydraulic design of the outlet is critical to achieving the desired performance of the basin. The outlet should be designed to drain the basin within 24 to 72 hours (also referred to as "drawdown time"). The 24-hour limit is specified to provide adequate settling time; the 72-hour limit is specified to mitigate vector control concerns.
- The two most common outlet problems that occur are: (1) the capacity of the outlet is too great resulting in only partial filling of the basin and drawdown time less than designed for; and (2) the outlet clogs because it is not adequately protected against trash and debris. To avoid these problems, the following outlet types are recommended for use: (1) a single orifice outlet with or without the protection of a riser pipe, and (2) perforated riser. Design guidance for single orifice and perforated riser outlets follow:

  - *Flow Control Using a Single Orifice At The Bottom Of The Basin (Figure 1)*: The outlet control orifice should be sized using the following equation:

$$a = \frac{2A(H - Ho)^{0.5}}{3600CT(2g)^{0.5}} = \frac{(7x10^{-5})A(H - Ho)^{0.5}}{CT} \qquad \text{(Eq. 2)}$$

where:

a = area of orifice (ft^2)

A = surface area of the basin at mid elevation (ft^2)

C = orifice coefficient

T = drawdown time of full basin (hrs)

g = gravity (32.2 ft/s^2)

H = elevation when the basin is full (ft)

Ho = final elevation when basin is empty (ft)

With a drawdown time of 40 hours, the equation becomes:

$$a = \frac{(1.75x10^{-6})A(H - Ho)^{0.5}}{C} \qquad \text{(Eq. 3)}$$

- *Flow Control Using Multiple Orifices (see Figure2):*

$$a_t = \frac{2A(h_{\max})}{3600CT(2g[h_{\max} - h_{centroid\ of\ orifices}])^{0.5}} \qquad \text{(Eq. 4)}$$

With terms as described above except:

a_t = total area of orifices

h_{max} = maximum height from lowest orifice to the maximum water surface (ft)

$h_{centroid\ of\ orifices}$ = height from the lowest orifice to the centroid of the orifice configuration (ft)

Allocate the orifices evenly on two rows; separate the holes by 3x hole diameter vertically, and by 120 degrees horizontally (refer to Figure 2).

Because basins are not maintained for infiltration, water loss by infiltration should be disregarded when designing the hydraulic capacity of the outlet structure.

Care must be taken in the selection of "C"; 0.60 is most often recommended and used. However, based on actual tests, GKY (1989), "Outlet Hydraulics of Extended Detention Facilities for Northern Virginia Planning District Commission", recommends the following:

C = 0.66 for thin materials; where the thickness is equal to or less than the orifice diameter, or

C = 0.80 when the material is thicker than the orifice diameter

Installation

- Securely anchor and install an anti-seep collar on the outlet pipe/riser and provide an emergency spillway for passing major floods (see local flood control agency).
- Areas under embankments must be cleared and stripped of vegetation.
- Chain link fencing should be provided around each sediment basin to prevent unauthorized entry to the basin or if safety is a concern.

Costs

Average annual costs for installation and maintenance (2 year useful life) are:

- Basin less than 50,000 ft^3: Range, \$0.24 - \$1.58/ft^3. Average, \$0.73 per ft^3. \$400 - \$2,400, \$1,200 average per drainage acre.
- Basin size greater than 50,000 ft^3: Range, \$0.12 – \$0.48/ft^3. Average, \$0.36 per ft^3. \$200 - \$800, \$600 average per drainage acre.

Inspection and Maintenance

- Inspect BMPs prior to forecast rain, daily during extended rain events, after rain events, weekly during the rainy season, and at two-week intervals during the non-rainy season.
- Examine basin banks for seepage and structural soundness.
- Check inlet and outlet structures and spillway for any damage or obstructions. Repair damage and remove obstructions as needed.
- Check inlet and outlet area for erosion and stabilize if required.
- Check fencing for damage and repair as needed.
- Sediment that accumulates in the BMP must be periodically removed in order to maintain BMP effectiveness. Sediment should be removed when sediment accumulation reaches one-half the designated sediment storage volume. Sediment removed during maintenance may be incorporated into earthwork on the site or disposed of at appropriate locations.
- Remove standing water from basin within 72 hours after accumulation.
- BMPs that require dewatering shall be continuously attended while dewatering takes place. Dewatering BMPs shall be implemented at all times during dewatering activities.
- To minimize vector production:
  - Remove accumulation of live and dead floating vegetation in basins during every inspection.
  - Remove excessive emergent and perimeter vegetation as needed or as advised by local or state vector control agencies.

References

A Current Assessment of Urban Best Management Practices: Techniques for Reducing Nonpoint Source Pollution in the Coastal Zones, Metropolitan Washington Council of Governments, March 1992.

Draft-Sedimentation and Erosion Control, an Inventory of Current Practices, USEPA. April 1990.

Guidelines for the Design and Construction of Small Embankment Dams, Division of Safety of Dams, California Department of Water Resources, March 1986.

Manual of Standards of Erosion and Sediment Control Measures, Association of Bay Area Governments, May 1995.

McLean, J., 2000. Mosquitoes in Constructed Wetlands: A Management Bugaboo? In T.R. Schueler and H.K. Holland [eds.], The Practice of Watershed Protection. pp. 29-33. Center for Watershed Protection, Ellicott City, MD, 2000.

Metzger, M.E., D. F. Messer, C. L. Beitia, C. M. Myers, and V. L. Kramer. The dark site of stormwater runoff management: disease vectors associated with structural BMPs, 2002.

National Management Measures to Control Nonpoint Source Pollution from Urban Areas, United States Environmental Protection Agency, 2002.

Proposed Guidance Specifying Management Measures for Sources of Nonpoint Pollution in Coastal Water, Work Group-Working Paper, USEPA, April 1992.

Stormwater Quality Handbooks - Construction Site Best Management Practices (BMPs) Manual, State of California Department of Transportation (Caltrans), November 2000.

Stormwater Management of the Puget Sound Basin, Technical Manual, Publication #91-75, Washington State Department of Ecology, February 1992.

U.S. Environmental Protection Agency (USEPA). Guidance Specifying Management Measures for Nonpoint Pollution in Coastal Waters. EPA 840-B-9-002. U.S. Environmental Protection Agency, Office of Water, Washington, DC, 1993

Water Quality Management Plan for the Lake Tahoe Region, Volume II Handbook of Management Practices, Tahoe Regional Planning Agency, November 1988.

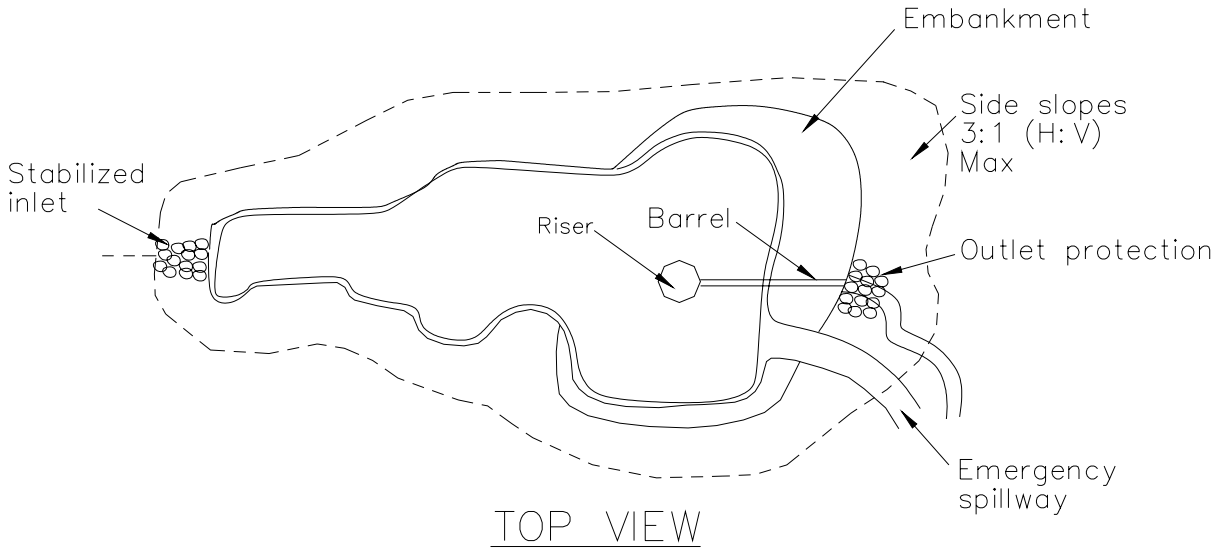

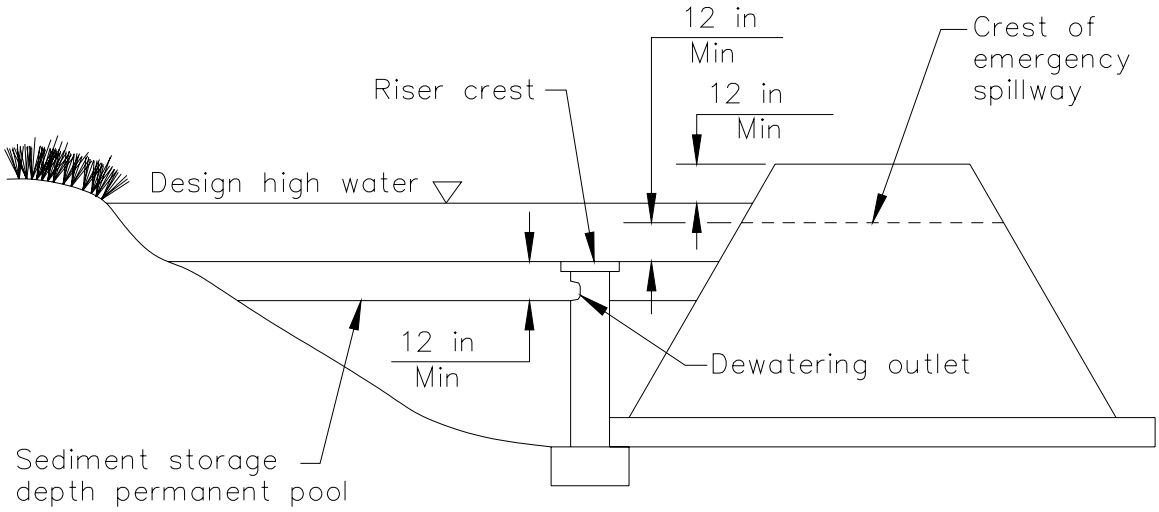

NOTE:
This outlet provides no drainage for permanent pool.

FIGURE 1: TYPICAL TEMPORARY SEDIMENT BASIN
SINGLE ORIFICE DESIGN
NOT TO SCALE

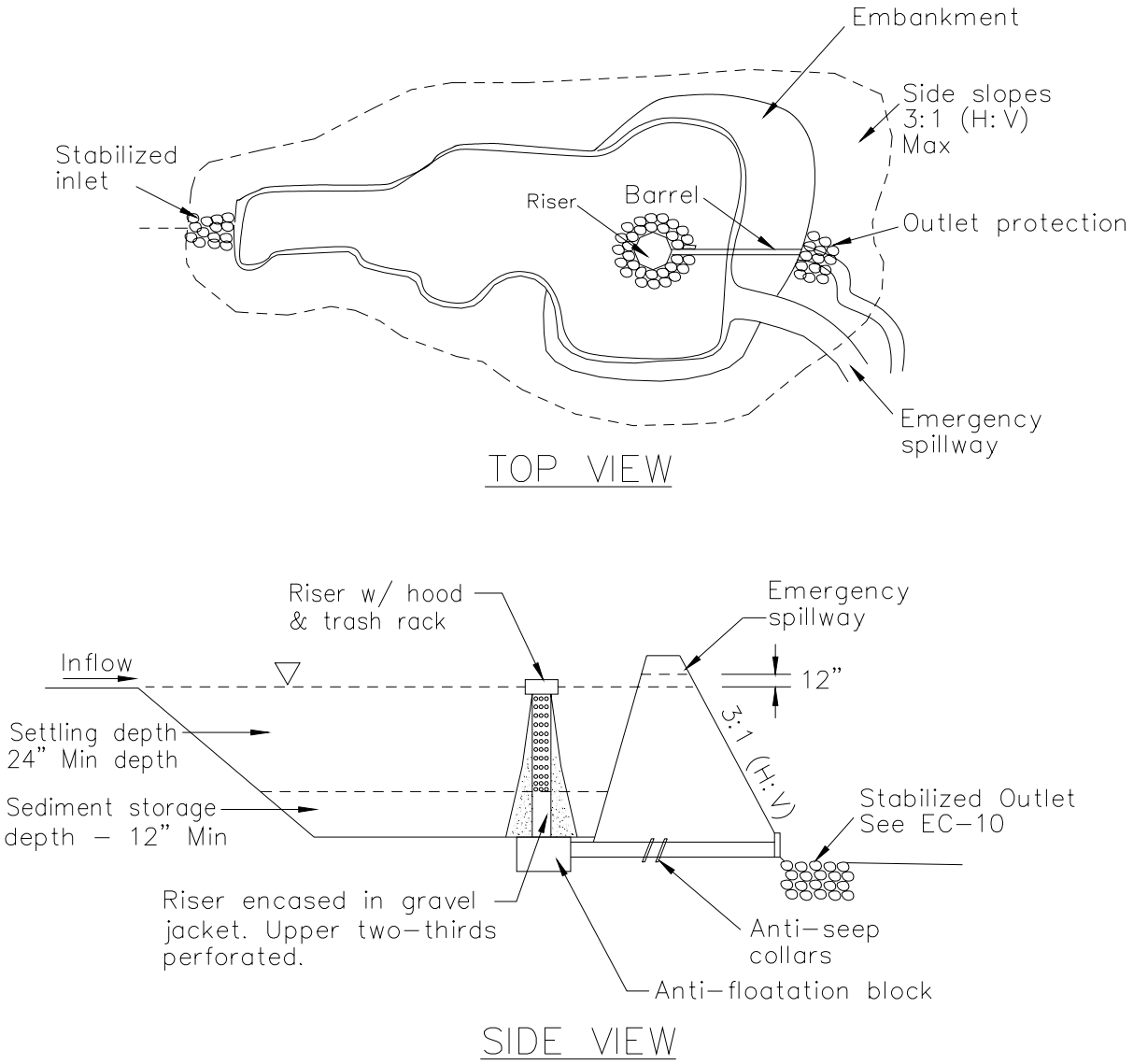

FIGURE 2: TYPICAL TEMPORARY SEDIMENT BASIN

MULTIPLE ORIFICE DESIGN

NOT TO SCALE

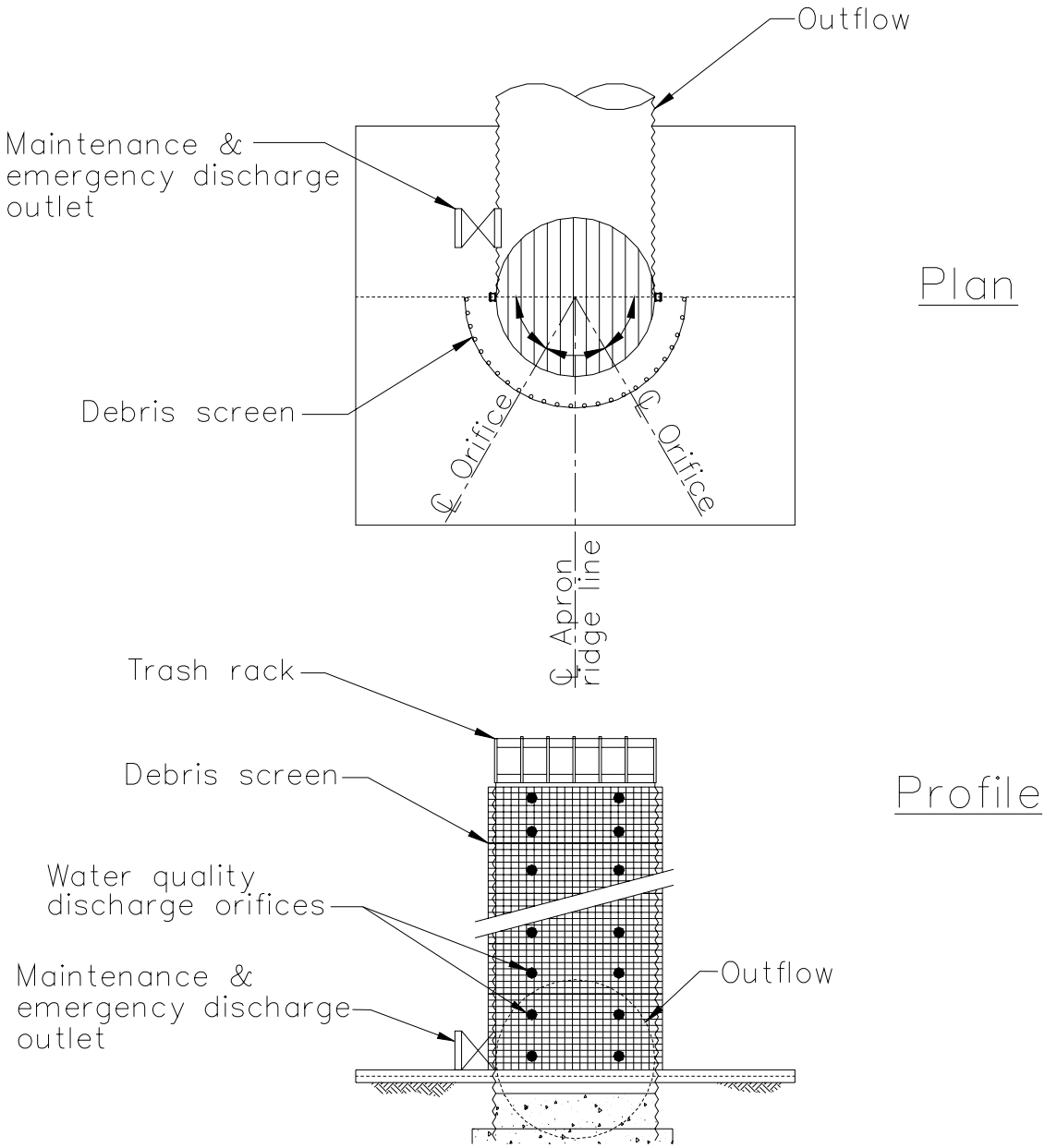

FIGURE 3: MULTIPLE ORIFICE OUTLET RISER

NOT TO SCALE

Sediment Trap SE-3

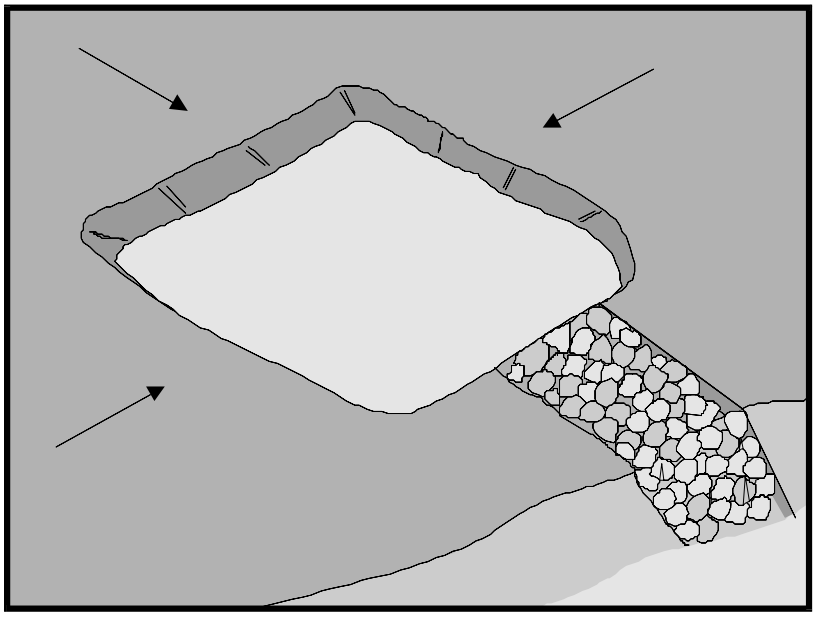

Objectives

EC	Erosion Control	
SE	Sediment Control	☑
TR	Tracking Control	
WE	Wind Erosion Control	
NS	Non-Stormwater Management Control	
WM	Waste Management and Materials Pollution Control	

Legend:

☑ **Primary Objective**

☒ **Secondary Objective**

Targeted Constituents

Sediment	☑
Nutrients	
Trash	☑
Metals	
Bacteria	
Oil and Grease	
Organics	

Potential Alternatives

SE-2 Sediment Basin (for larger areas)

Description and Purpose

A sediment trap is a containment area where sediment-laden runoff is temporarily detained under quiescent conditions, allowing sediment to settle out or before the runoff is discharged. Sediment traps are formed by excavating or constructing an earthen embankment across a waterway or low drainage area.

Suitable Applications

Sediment traps should be considered for use:

- At the perimeter of the site at locations where sediment-laden runoff is discharged offsite.
- At multiple locations within the project site where sediment control is needed.
- Around or upslope from storm drain inlet protection measures.
- Sediment traps may be used on construction projects where the drainage area is less than 5 acres. Traps would be placed where sediment-laden stormwater may enter a storm drain or watercourse. SE-2, Sediment Basins, must be used for drainage areas greater than 5 acres.
- As a supplemental control, sediment traps provide additional protection for a water body or for reducing sediment before it enters a drainage system.

Limitations

- Requires large surface areas to permit infiltration and settling of sediment.
- Not appropriate for drainage areas greater than 5 acres.
- Only removes large and medium sized particles and requires upstream erosion control.
- Attractive and dangerous to children, requiring protective fencing.
- Conducive to vector production.
- Should not be located in live streams.

Implementation

Design

A sediment trap is a small temporary ponding area, usually with a gravel outlet, formed by excavation or by construction of an earthen embankment. Its purpose is to collect and store sediment from sites cleared or graded during construction. It is intended for use on small drainage areas with no unusual drainage features and projected for a quick build-out time. It should help in removing coarse sediment from runoff. The trap is a temporary measure with a design life of approximately six months to one year and is to be maintained until the site area is permanently protected against erosion by vegetation and/or structures.

Sediment traps should be used only for small drainage areas. If the contributing drainage area is greater than 5 acres, refer to SE-2, Sediment Basins, or subdivide the catchment area into smaller drainage basins.

Sediment usually must be removed from the trap after each rainfall event. The SWPPP should detail how this sediment is to be disposed of, such as in fill areas onsite, or removal to an approved offsite dump. Sediment traps used as perimeter controls should be installed before any land disturbance takes place in the drainage area.

Sediment traps are usually small enough that a failure of the structure would not result in a loss of life, damage to home or buildings, or interruption in the use of public roads or utilities. However, sediment traps are attractive to children and can be dangerous. The following recommendations should be implemented to reduce risks:

- Install continuous fencing around the sediment trap or pond. Consult local ordinances regarding requirements for maintaining health and safety.
- Restrict basin side slopes to 3:1 or flatter.

Sediment trap size depends on the type of soil, size of the drainage area, and desired sediment removal efficiency (see SE-2, Sediment Basin). As a rule of thumb, the larger the basin volume the greater the sediment removal efficiency. Sizing criteria are typically established under the local grading ordinance or equivalent. The runoff volume from a 2-year storm is a common design criteria for a sediment trap. The sizing criteria below assume that this runoff volume is 0.042 acre-ft/acre (0.5 in. of runoff). While the climatic, topographic, and soil type extremes make it difficult to establish a statewide standard, the following criteria should trap moderate to high amounts of sediment in most areas of California:

- Locate sediment traps as near as practical to areas producing the sediment.
- Trap should be situated according to the following criteria: (1) by excavating a suitable area or where a low embankment can be constructed across a swale, (2) where failure would not cause loss of life or property damage, and (3) to provide access for maintenance, including sediment removal and sediment stockpiling in a protected area.
- Trap should be sized to accommodate a settling zone and sediment storage zone with recommended minimum volumes of 67 yd^3/acre and 33 yd^3/acre of contributing drainage area, respectively, based on 0.5 in. of runoff volume over a 24-hour period. In many cases, the size of an individual trap is limited by available space. Multiple traps or additional volume may be required to accommodate specific rainfall, soil, and site conditions.
- Traps with an impounding levee greater than 4.5 ft tall, measured from the lowest point to the impounding area to the highest point of the levee, and traps capable of impounding more than 35,000 ft^3, should be designed by a Registered Civil Engineer. The design should include maintenance requirements, including sediment and vegetation removal, to ensure continuous function of the trap outlet and bypass structures.
- The outlet pipe or open spillway must be designed to convey anticipated peak flows.
- Use rock or vegetation to protect the trap outlets against erosion.
- Fencing should be provided to prevent unauthorized entry.

Installation

Sediment traps can be constructed by excavating a depression in the ground or creating an impoundment with a small embankment. Sediment traps should be installed outside the area being graded and should be built prior to the start of the grading activities or removal of vegetation. To minimize the area disturbed by them, sediment traps should be installed in natural depressions or in small swales or drainage ways. The following steps must be followed during installation:

- The area under the embankment must be cleared, grubbed, and stripped of any vegetation and root mat. The pool area should be cleared.
- The fill material for the embankment must be free of roots or other woody vegetation as well as oversized stones, rocks, organic material, or other objectionable material. The embankment may be compacted by traversing with equipment while it is being constructed.
- All cut-and-fill slopes should be 3:1 or flatter.
- When a riser is used, all pipe joints must be watertight.
- When a riser is used, at least the top two-thirds of the riser should be perforated with 0.5 in. diameter holes spaced 8 in. vertically and 10 to 12 in. horizontally. See SE-2, Sediment Basin.
- When an earth or stone outlet is used, the outlet crest elevation should be at least 1 ft below the top of the embankment.

- When crushed stone outlet is used, the crushed stone used in the outlet should meet AASHTO M43, size No. 2 or 24, or its equivalent such as MSHA No. 2. Gravel meeting the above gradation may be used if crushed stone is not available.

Costs

Average annual cost per installation and maintenance (18 month useful life) is $0.73 per ft^3 ($1,300 per drainage acre). Maintenance costs are approximately 20% of installation costs.

Inspection and Maintenance

- Inspect BMPs prior to forecast rain, daily during extended rain events, after rain events, weekly during the rainy season, and at two-week intervals during the non-rainy season.
- Inspect outlet area for erosion and stabilize if required.
- Inspect trap banks for seepage and structural soundness, repair as needed.
- Inspect outlet structure and spillway for any damage or obstructions. Repair damage and remove obstructions as needed.
- Inspect fencing for damage and repair as needed.
- Inspect the sediment trap for area of standing water during every visit. Corrective measures should be taken if the BMP does not dewater completely in 72 hours or less to prevent vector production.
- Sediment that accumulates in the BMP must be periodically removed in order to maintain BMP effectiveness. Sediment should be removed when the sediment accumulation reaches one-third of the trap capacity. Sediment removed during maintenance may be incorporated into earthwork on the site or disposed of at an appropriate location.
- Remove vegetation from the sediment trap when first detected to prevent pools of standing water and subsequent vector production.
- BMPs that require dewatering shall be continuously attended while dewatering takes place. Dewatering BMPs shall be implemented at all times during dewatering activities.

References

Brown, W., and T. Schueler. The Economics of Stormwater BMPs in the Mid-Atlantic Region. Prepared for Chesapeake Research Consortium, Edgewater, MD, by the Center for Watershed Protection, Ellicott City, MD, 1997.

Draft – Sedimentation and Erosion Control, an Inventory of Current Practices, USEPA, April 1990.

Manual of Standards of Erosion and Sediment Control Measures, Association of Bay Area Governments, May 1995.

Metzger, M.E., D.F. Messer, C.L. Beitia, C.M. Myers, and V.L. Kramer, The Dark Side of Stormwater Runoff Management: Disease Vectors Associated with Structural BMPs, 2002.

National Management Measures to Control Nonpoint Source Pollution from Urban Areas, United States Environmental Protection Agency, 2002.

Proposed Guidance Specifying Management Measures for Sources of Nonpoint Pollution in Coastal Waters, Work Group-Working Paper, USEPA, April 1992.

Stormwater Quality Handbooks - Construction Site Best Management Practices (BMPs) Manual, State of California Department of Transportation (Caltrans), November 2000.

Stormwater Management Manual for The Puget Sound Basin, Washington State Department of Ecology, Public Review Draft, 1991.

U.S. Environmental Protection Agency (USEPA). Guidance Specifying Management Measures for Nonpoint Pollution in Coastal Waters. EPA 840-B-9-002. U.S. Environmental Protection Agency, Office of Water, Washington, DC, 1993.

Water Quality Management Plan for the Lake Tahoe Region, Volume II, Handbook of Management Practices, Tahoe Regional Planning Agency, November 1988.

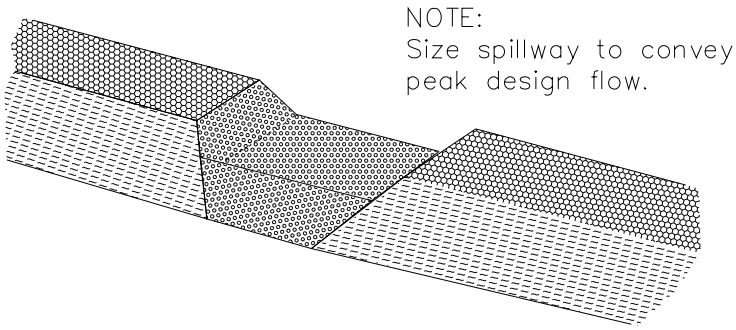

TYPICAL OPEN SPILLWAY

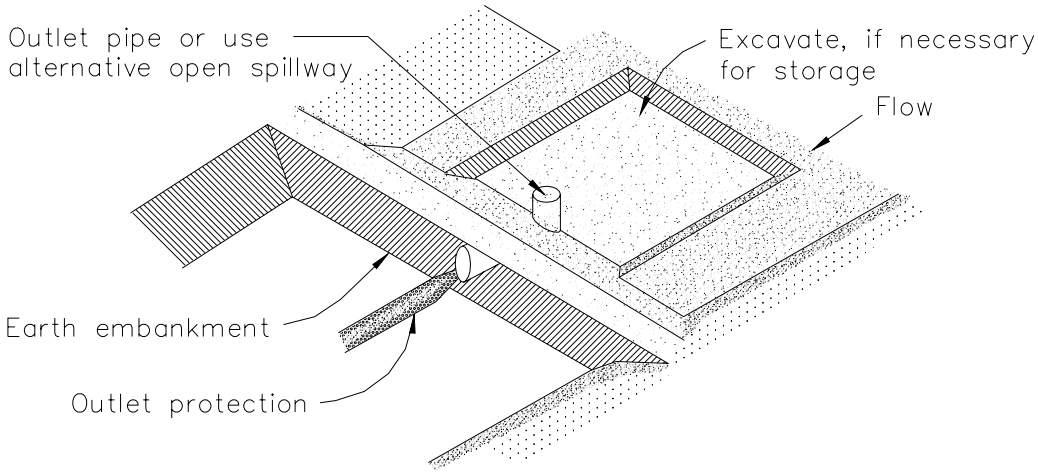

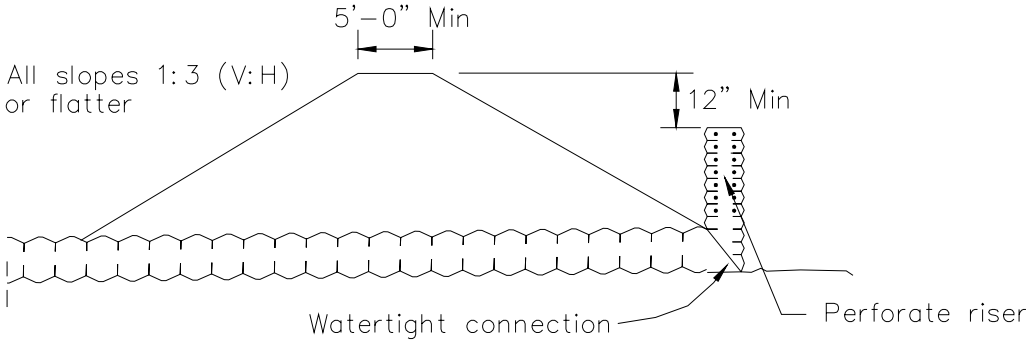

EMBANKMENT SECTION THRU RISER

TYPICAL SEDIMENT TRAP
NOT TO SCALE

Check Dams SE-4

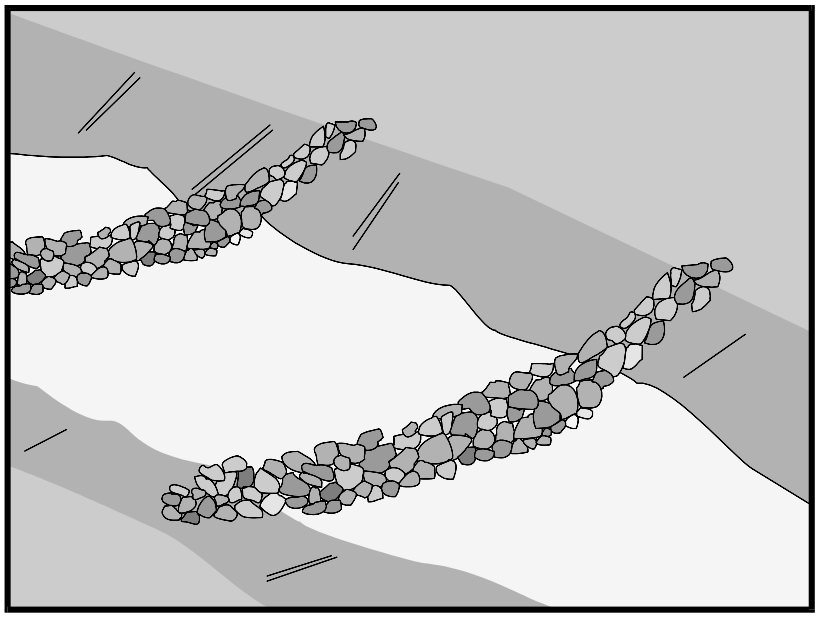

Objectives

EC	Erosion Control	☒
SE	Sediment Control	☑
TR	Tracking Control	
WE	Wind Erosion Control	
NS	Non-Stormwater Management Control	
WM	Waste Management and Materials Pollution Control	

Legend:

☑ **Primary Objective**

☒ **Secondary Objective**

Targeted Constituents

Sediment	☑
Nutrients	
Trash	
Metals	
Bacteria	
Oil and Grease	
Organics	

Potential Alternatives

SE-5 Fiber Rolls

SE-6 Gravel Bag Berm

SE-8 Sandbag Barrier

Description and Purpose

A check dam is a small barrier constructed of rock, gravel bags, sandbags, fiber rolls, or reusable products, placed across a constructed swale or drainage ditch. Check dams reduce the effective slope of the channel, thereby reducing the velocity of flowing water, allowing sediment to settle and reducing erosion.

Suitable Applications

Check dams may be appropriate in the following situations:

- To promote sedimentation behind the dam.
- To prevent erosion by reducing the velocity of channel flow in small intermittent channels and temporary swales.
- In small open channels that drain 10 acres or less.
- In steep channels where stormwater runoff velocities exceed 5 ft/s.
- During the establishment of grass linings in drainage ditches or channels.
- In temporary ditches where the short length of service does not warrant establishment of erosion-resistant linings.

Limitations

- Not to be used in live streams or in channels with extended base flows.

- Not appropriate in channels that drain areas greater than 10 acres.
- Not appropriate in channels that are already grass-lined unless erosion is expected, as installation may damage vegetation.
- Require extensive maintenance following high velocity flows.
- Promotes sediment trapping which can be re-suspended during subsequent storms or removal of the check dam.

Implementation

General

Check dams reduce the effective slope and create small pools in swales and ditches that drain 10 acres or less. Reduced slopes reduce the velocity of stormwater flows, thus reducing erosion of the swale or ditch and promoting sedimentation. Use of check dams for sedimentation will likely result in little net removal of sediment because of the small detention time and probable scour during longer storms. Using a series of check dams will generally increase their effectiveness. A sediment trap (SE-3) may be placed immediately upstream of the check dam to increase sediment removal efficiency.

Design and Layout

Check dams work by decreasing the effective slope in ditches and swales. An important consequence of the reduced slope is a reduction in capacity of the ditch or swale. This reduction in capacity must be considered when using this BMP, as reduced capacity can result in overtopping of the ditch or swale and resultant consequences. In some cases, such as a "permanent" ditch or swale being constructed early and used as a "temporary" conveyance for construction flows, the ditch or swale may have sufficient capacity such that the temporary reduction in capacity due to check dams is acceptable. When check dams reduce capacities beyond acceptable limits, there are several options:

- Don't use check dams. Consider alternative BMPs.
- Increase the size of the ditch or swale to restore capacity.

Maximum slope and velocity reduction is achieved when the toe of the upstream dam is at the same elevation as the top of the downstream dam. The center section of the dam should be lower than the edge sections so that the check dam will direct flows to the center of the ditch or swale.

Check dams are usually constructed of rock, gravel bags, sandbags, and fiber rolls. A number of products manufactured specifically for use as check dams are also being used, and some of these products can be removed and reused. Check dams can also be constructed of logs or lumber, and have the advantage of a longer lifespan when compared to gravel bags, sandbags, and fiber rolls. Straw bales can also be used for check dams and can work if correctly installed; but in practice, straw bale check dams have a high failure rate. Check dams should not be constructed from straw bales or silt fences, since concentrated flows quickly wash out these materials.

Rock check dams are usually constructed of 8 to 12 in. rock. The rock is placed either by hand or mechanically, but never just dumped into the channel. The dam must completely span the ditch

or swale to prevent washout. The rock used must be large enough to stay in place given the expected design flow through the channel.

Log check dams are usually constructed of 4 to 6 in. diameter logs. The logs should be embedded into the soil at least 18 in. Logs can be bolted or wired to vertical support logs that have been driven or buried into the soil.

Gravel bag and sandbag check dams are constructed by stacking bags across the ditch or swale, shaped as shown in the drawings at the end of this fact sheet.

Manufactured products should be installed in accordance with the manufacturer's instructions.

If grass is planted to stabilize the ditch or swale, the check dam should be removed when the grass has matured (unless the slope of the swales is greater than 4%).

The following guidance should be followed for the design and layout of check dams:

- Install the first check dam approximately 16 ft from the outfall device and at regular intervals based on slope gradient and soil type.
- Check dams should be placed at a distance and height to allow small pools to form between each check dam.
- Backwater from a downstream check dam should reach the toes of the upstream check dam.
- A sediment trap provided immediately upstream of the check dam will help capture sediment. Due to the potential for this sediment to be resuspended in subsequent storms, the sediment trap must be cleaned following each storm event.
- High flows (typically a 2-year storm or larger) should safely flow over the check dam without an increase in upstream flooding or damage to the check dam.
- Where grass is used to line ditches, check dams should be removed when grass has matured sufficiently to protect the ditch or swale.
- Gravel bags may be used as check dams with the following specifications:

Materials

Gravel bags used for check dams should conform to the requirements of SE-6, Gravel Bag Berms. Sandbags used for check dams should conform to SE-8, Sandbag Barrier. Fiber rolls used for check dams should conform to SE-5, Fiber Rolls. Straw bales used for check dams should conform to SE-9, Straw Bale Barrier.

Installation

- Rock should be placed individually by hand or by mechanical methods (no dumping of rock) to achieve complete ditch or swale coverage.
- Tightly abut bags and stack according to detail shown in the figure at the end of this section. Gravel bags and sandbags should not be stacked any higher than 3 ft.
- Fiber rolls and straw bales must be trenched in and firmly staked in place.

Costs

Cost consists of only installation costs if materials are readily available. If material must be imported, costs may increase. For material costs, see SE-5, SE-6, SE-8 and SE-9.

Inspection and Maintenance

- Inspect BMPs prior to forecast rain, daily during extended rain events, after rain events, weekly during the rainy season, and at two-week intervals during the non-rainy season.
- Replace missing rock, bags, bales, etc. Replace bags or bales that have degraded or have become damaged.
- If the check dam is used as a sediment capture device, sediment that accumulates in the BMP must be periodically removed in order to maintain BMP effectiveness. Sediment should be removed when the sediment accumulation reaches one-third of the barrier height. Sediment removed during maintenance may be incorporated into earthwork on the site or disposed at an appropriate location.
- If the check dam is used as a grade control structure, sediment removal is not required as long as the system continues to control the grade.
- Remove accumulated sediment prior to permanent seeding or soil stabilization.
- Remove check dam and accumulated sediment when check dams are no longer needed.

References

Draft – Sedimentation and Erosion Control, and Inventory of Current Practices, USEPA, April 1990.

Manual of Standards of Erosion and Sediment Control Measures, Association of Bay Area Governments, May 1995.

Stormwater Quality Handbooks - Construction Site Best Management Practices (BMPs) Manual, State of California Department of Transportation (Caltrans), November 2000.

Stormwater Management of the Puget Sound Basin, Technical Manual, Publication #91-75, Washington State Department of Ecology, February 1992.

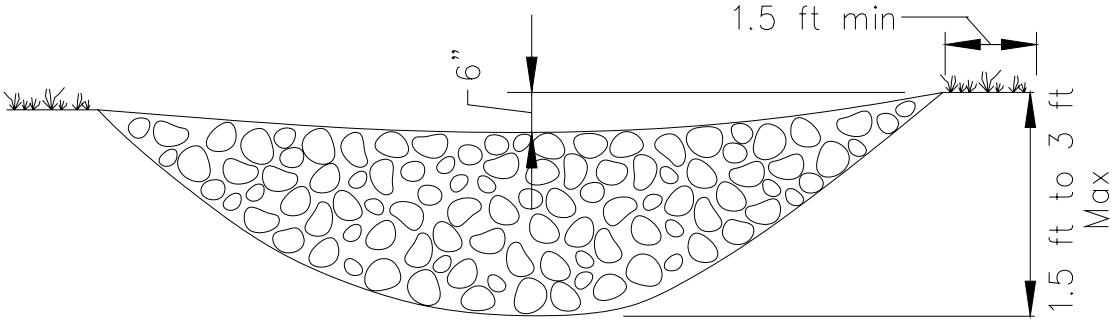

ELEVATION

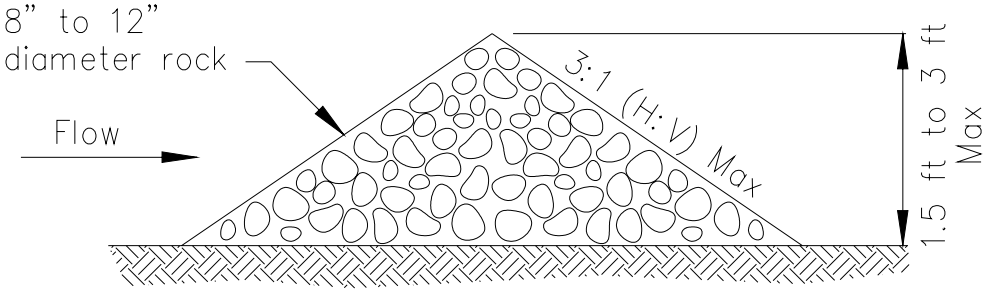

TYPICAL ROCK CHECK DAM SECTION

ROCK CHECK DAM
NOT TO SCALE

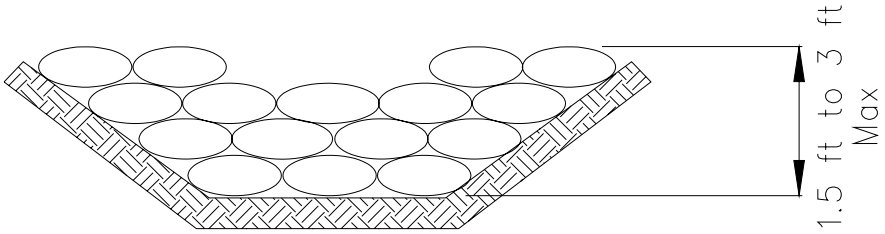

GRAVEL BAG CHECK DAM ELEVATION
NOT TO SCALE

Fiber Rolls SE-5

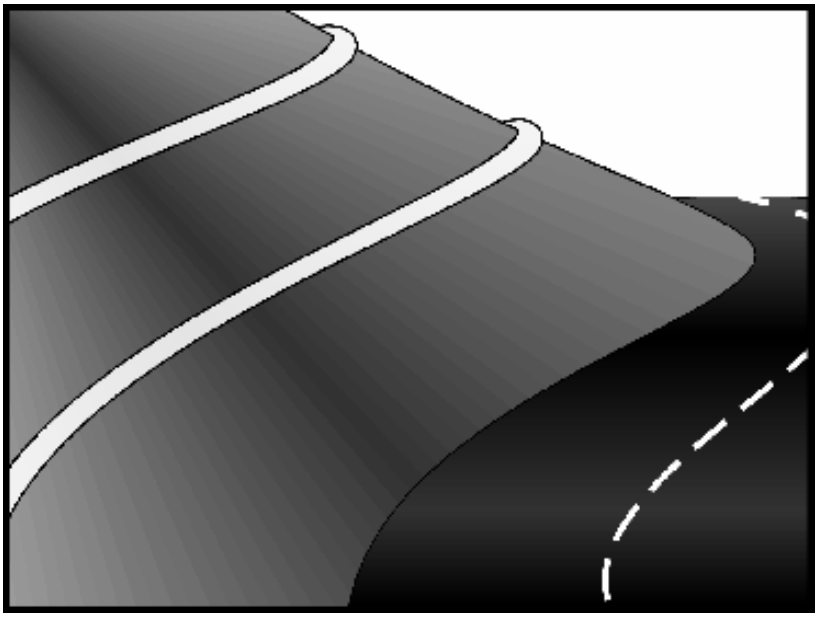

Objectives

EC	Erosion Control	☒
SE	Sediment Control	☑
TR	Tracking Control	
WE	Wind Erosion Control	
NS	Non-Stormwater Management Control	
WM	Waste Management and Materials Pollution Control	

Legend:

☑ **Primary Objective**

☒ **Secondary Objective**

Targeted Constituents

Sediment	☑
Nutrients	
Trash	
Metals	
Bacteria	
Oil and Grease	
Organics	

Potential Alternatives

SE-1 Silt Fence

SE-6 Gravel Bag Berm

SE-8 Sandbag Barrier

SE-9 Straw Bale Barrier

Description and Purpose

A fiber roll consists of straw, flax, or other similar materials bound into a tight tubular roll. When fiber rolls are placed at the toe and on the face of slopes, they intercept runoff, reduce its flow velocity, release the runoff as sheet flow, and provide removal of sediment from the runoff. By interrupting the length of a slope, fiber rolls can also reduce erosion.

Suitable Applications

Fiber rolls may be suitable:

- Along the toe, top, face, and at grade breaks of exposed and erodible slopes to shorten slope length and spread runoff as sheet flow
- At the end of a downward slope where it transitions to a steeper slope
- Along the perimeter of a project
- As check dams in unlined ditches
- Down-slope of exposed soil areas
- Around temporary stockpiles

Limitations

- Fiber rolls are not effective unless trenched

- Fiber rolls at the toe of slopes greater than 5:1 (H:V) should be a minimum of 20 in. diameter or installations achieving the same protection (i.e. stacked smaller diameter fiber rolls, etc.).
- Difficult to move once saturated.
- If not properly staked and trenched in, fiber rolls could be transported by high flows.
- Fiber rolls have a very limited sediment capture zone.
- Fiber rolls should not be used on slopes subject to creep, slumping, or landslide.

Implementation

Fiber Roll Materials

- Fiber rolls should be either prefabricated rolls or rolled tubes of erosion control blanket.

Assembly of Field Rolled Fiber Roll

- Roll length of erosion control blanket into a tube of minimum 8 in. diameter.
- Bind roll at each end and every 4 ft along length of roll with jute-type twine.

Installation

- Locate fiber rolls on level contours spaced as follows:
  - Slope inclination of 4:1 (H:V) or flatter: Fiber rolls should be placed at a maximum interval of 20 ft.
  - Slope inclination between 4:1 and 2:1 (H:V): Fiber Rolls should be placed at a maximum interval of 15 ft. (a closer spacing is more effective).
  - Slope inclination 2:1 (H:V) or greater: Fiber Rolls should be placed at a maximum interval of 10 ft. (a closer spacing is more effective).
- Turn the ends of the fiber roll up slope to prevent runoff from going around the roll.
- Stake fiber rolls into a 2 to 4 in. deep trench with a width equal to the diameter of the fiber roll.
  - Drive stakes at the end of each fiber roll and spaced 4 ft maximum on center.
  - Use wood stakes with a nominal classification of 0.75 by 0.75 in. and minimum length of 24 in.
- If more than one fiber roll is placed in a row, the rolls should be overlapped, not abutted.

Removal

- Fiber rolls are typically left in place.

- If fiber rolls are removed, collect and dispose of sediment accumulation, and fill and compact holes, trenches, depressions or any other ground disturbance to blend with adjacent ground.

Costs

Material costs for fiber rolls range from $20 - $30 per 25 ft roll.

Inspection and Maintenance

- Inspect BMPs prior to forecast rain, daily during extended rain events, after rain events, weekly during the rainy season, and at two-week intervals during the non-rainy season.
- Repair or replace split, torn, unraveling, or slumping fiber rolls.
- If the fiber roll is used as a sediment capture device, or as an erosion control device to maintain sheet flows, sediment that accumulates in the BMP must be periodically removed in order to maintain BMP effectiveness. Sediment should be removed when sediment accumulation reaches one-half the designated sediment storage depth, usually one-half the distance between the top of the fiber roll and the adjacent ground surface. Sediment removed during maintenance may be incorporated into earthwork on the site of disposed at an appropriate location.
- If fiber rolls are used for erosion control, such as in a mini check dam, sediment removal should not be required as long as the system continues to control the grade. Sediment control BMPs will likely be required in conjunction with this type of application.

References

Stormwater Quality Handbooks - Construction Site Best Management Practices (BMPs) Manual, State of California Department of Transportation (Caltrans), November 2000.

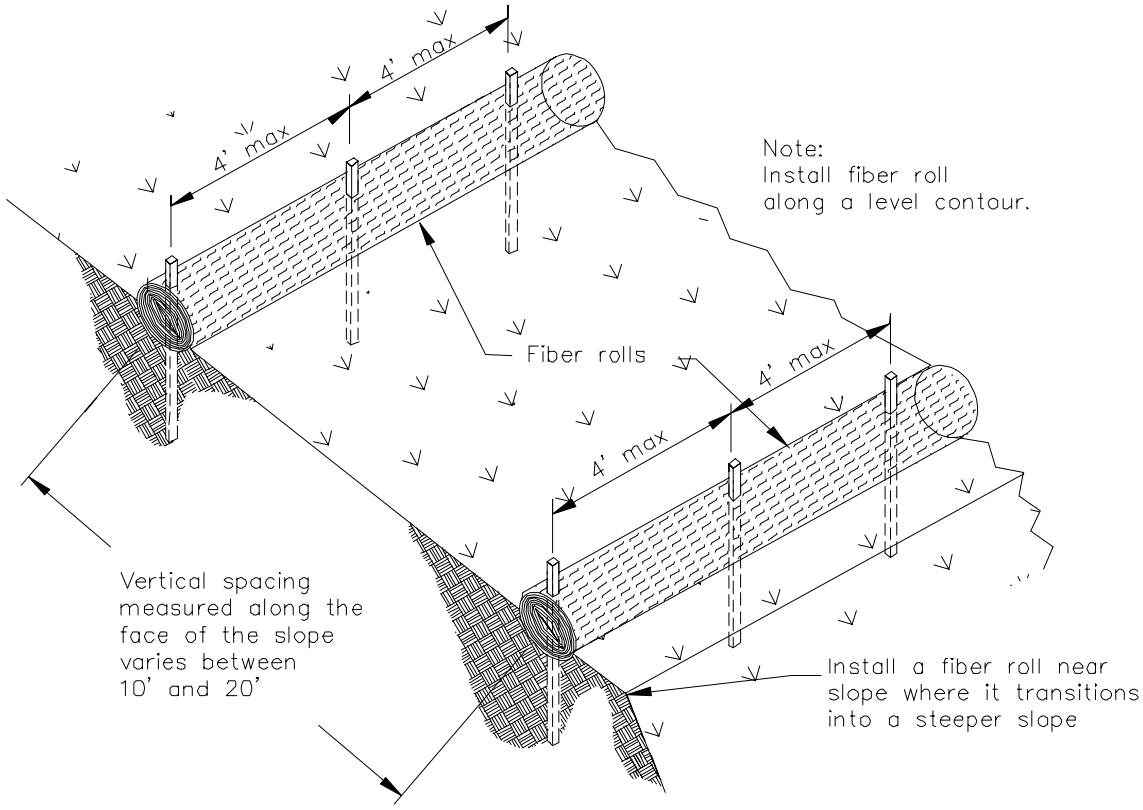

TYPICAL FIBER ROLL INSTALLATION

N.T.S.

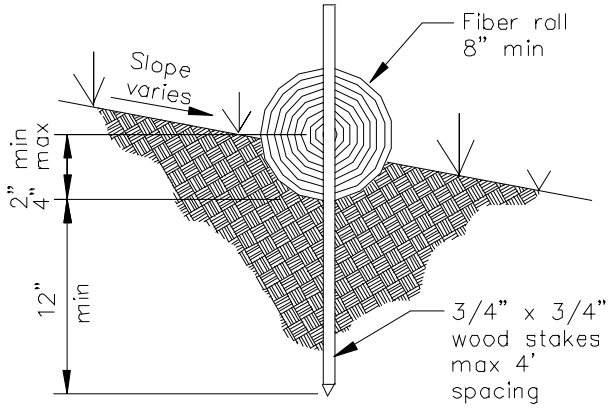

ENTRENCHMENT DETAIL

N.T.S.

Gravel Bag Berm SE-6

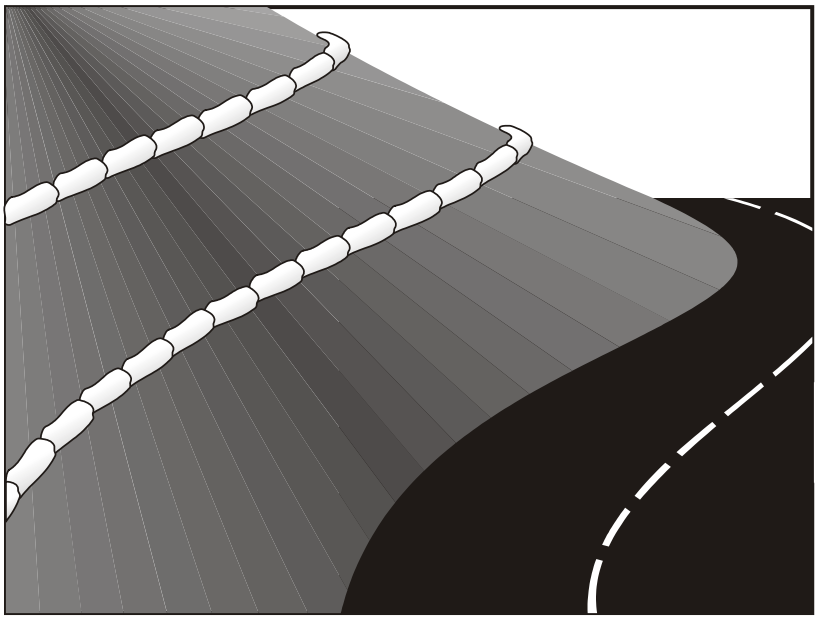

Objectives

EC	Erosion Control	☒
SE	Sediment Control	☑
TR	Tracking Control	
WE	Wind Erosion Control	
NS	Non-Stormwater Management Control	
WM	Waste Management and Materials Pollution Control	

Legend:

☑ **Primary Objective**

☒ **Secondary Objective**

Targeted Constituents

Sediment	☑
Nutrients	
Trash	
Metals	
Bacteria	
Oil and Grease	
Organics	

Potential Alternatives

SE-1 Silt Fence

SE-5 Fiber Roll

SE-8 Sandbag Barrier

SE-9 Straw Bale Barrier

Description and Purpose

A gravel bag berm is a series of gravel-filled bags placed on a level contour to intercept sheet flows. Gravel bags pond sheet flow runoff, allowing sediment to settle out, and release runoff slowly as sheet flows, preventing erosion.

Suitable Applications

Gravel bag berms may be suitable:

- As a linear sediment control measure:
  - Below the toe of slopes and erodible slopes
  - As sediment traps at culvert/pipe outlets
  - Below other small cleared areas
  - Along the perimeter of a site
  - Down slope of exposed soil areas
  - Around temporary stockpiles and spoil areas
  - Parallel to a roadway to keep sediment off paved areas
  - Along streams and channels
- As linear erosion control measure:

- Along the face and at grade breaks of exposed and erodible slopes to shorten slope length and spread runoff as sheet flow
- At the top of slopes to divert runoff away from disturbed slopes
- As check dams across mildly sloped construction roads

Limitations

- Gravel berms may be difficult to remove.
- Removal problems limit their usefulness in landscaped areas.
- Gravel bag berm may not be appropriate for drainage areas greater than 5 acres.
- Runoff will pond upstream of the filter, possibly causing flooding if sufficient space does not exist.
- Degraded gravel bags may rupture when removed, spilling contents.
- Installation can be labor intensive.
- Berms may have limited durability for long-term projects.
- When used to detain concentrated flows, maintenance requirements increase.

Implementation

General

A gravel bag berm consists of a row of open graded gravel–filled bags placed on a level contour. When appropriately placed, a gravel bag berm intercepts and slows sheet flow runoff, causing temporary ponding. The temporary ponding provides quiescent conditions allowing sediment to settle. The open graded gravel in the bags is porous, which allows the ponded runoff to flow slowly through the bags, releasing the runoff as sheet flows. Gravel bag berms also interrupt the slope length and thereby reduce erosion by reducing the tendency of sheet flows to concentrate into rivulets, which erode rills, and ultimately gullies, into disturbed, sloped soils. Gravel bag berms are similar to sand bag barriers, but are more porous.

Design and Layout

- Locate gravel bag berms on level contours.
  - Slopes between 20:1 and 2:1 (H:V): Gravel bags should be placed at a maximum interval of 50 ft (a closer spacing is more effective), with the first row near the slope toe.
  - Slopes 2:1 (H:V) or steeper: Gravel bags should be placed at a maximum interval of 25 ft (a closer spacing is more effective), with the first row placed the slope toe.
- Turn the ends of the gravel bag barriers up slope to prevent runoff from going around the berm.
- Allow sufficient space up slope from the gravel bag berm to allow ponding, and to provide room for sediment storage.

- For installation near the toe of the slope, consider moving the gravel bag barriers away from the slope toe to facilitate cleaning. To prevent flows behind the barrier, bags can be placed perpendicular to a berm to serve as cross barriers.
- Drainage area should not exceed 5 acres.
- In Non-Traffic Areas:
  - Height = 18 in. maximum
  - Top width = 24 in. minimum for three or more layer construction
  - Top width = 12 in. minimum for one or two layer construction
  - Side slopes = 2:1 or flatter
- In Construction Traffic Areas:
  - Height = 12 in. maximum
  - Top width = 24 in. minimum for three or more layer construction.
  - Top width = 12 in. minimum for one or two layer construction.
  - Side slopes = 2:1 or flatter.
- Butt ends of bags tightly
- On multiple row, or multiple layer construction, overlapp butt joints of adjacent row and row beneath.
- Use a pyramid approach when stacking bags.

Materials

- ***Bag Material:*** Bags should be woven polypropylene, polyethylene or polyamide fabric or burlap, minimum unit weight of 4 ounces/yd^2, Mullen burst strength exceeding 300 lb/in^2 in conformance with the requirements in ASTM designation D3786, and ultraviolet stability exceeding 70% in conformance with the requirements in ASTM designation D4355.
- ***Bag Size:*** Each gravel-filled bag should have a length of 18 in., width of 12 in., thickness of 3 in., and mass of approximately 33 lbs. Bag dimensions are nominal, and may vary based on locally available materials.
- ***Fill Material:*** Fill material should be 0.5 to 1 in. Class 2 aggregate base, clean and free from clay, organic matter, and other deleterious material, or other suitable open graded, non-cohesive, porous gravel.

Costs

Gravel filter: Expensive, since off-site materials, hand construction, and demolition/removal are usually required. Material costs for gravel bags are average of $2.50 per empty gravel bag. Gravel costs range from $20-$35 per yd^3.

Inspection and Maintenance

- Inspect BMPs prior to forecast rain, daily during extended rain events, after rain events, weekly during the rainy season, and at two-week intervals during the non-rainy season.
- Gravel bags exposed to sunlight will need to be replaced every two to three months due to degrading of the bags.
- Reshape or replace gravel bags as needed.
- Repair washouts or other damage as needed.
- Sediment that accumulates in the BMP must be periodically removed in order to maintain BMP effectiveness. Sediment should be removed when the sediment accumulation reaches one-third of the barrier height. Sediment removed during maintenance may be incorporated into earthwork on the site or disposed at an appropriate location.
- Remove gravel bag berms when no longer needed. Remove sediment accumulation and clean, re-grade, and stabilize the area. Removed sediment should be incorporated in the project or disposed of.

References

Handbook of Steel Drainage and Highway Construction, American Iron and Steel Institute, 1983.

Stormwater Quality Handbooks - Construction Site Best Management Practices (BMPs) Manual, State of California Department of Transportation (Caltrans), November 2000.

Stormwater Pollution Plan Handbook, First Edition, State of California, Department of Transportation Division of New Technology, Materials and Research, October 1992.

Street Sweeping and Vacuuming SE-7

Objectives

EC	Erosion Control	
SE	Sediment Control	☒
TR	Tracking Control	☑
WE	Wind Erosion Control	
NS	Non-Stormwater Management Control	
WM	Waste Management and Materials Pollution Control	

Legend:

☑ **Primary Objective**

☒ **Secondary Objective**

Targeted Constituents

Sediment	☑
Nutrients	
Trash	☑
Metals	
Bacteria	
Oil and Grease	☑
Organics	

Potential Alternatives

None

Description and Purpose

Street sweeping and vacuuming includes use of self-propelled and walk-behind equipment to remove sediment from streets and roadways, and to clean paved surfaces in preparation for final paving. Sweeping and vacuuming prevents sediment from the project site from entering storm drains or receiving waters.

Suitable Applications

Sweeping and vacuuming are suitable anywhere sediment is tracked from the project site onto public or private paved streets and roads, typically at points of egress. Sweeping and vacuuming are also applicable during preparation of paved surfaces for final paving.

Limitations

Sweeping and vacuuming may not be effective when sediment is wet or when tracked soil is caked (caked soil may need to be scraped loose).

Implementation

- Controlling the number of points where vehicles can leave the site will allow sweeping and vacuuming efforts to be focused, and perhaps save money.
- Inspect potential sediment tracking locations daily.
- Visible sediment tracking should be swept or vacuumed on a daily basis.

- Do not use kick brooms or sweeper attachments. These tend to spread the dirt rather than remove it.
- If not mixed with debris or trash, consider incorporating the removed sediment back into the project

Costs

Rental rates for self-propelled sweepers vary depending on hopper size and duration of rental. Expect rental rates from $58/hour (3 yd^3 hopper) to $88/hour (9 yd^3 hopper), plus operator costs. Hourly production rates vary with the amount of area to be swept and amount of sediment. Match the hopper size to the area and expect sediment load to minimize time spent dumping.

Inspection and Maintenance

- Inspect BMPs prior to forecast rain, daily during extended rain events, after rain events, weekly during the rainy season, and at two-week intervals during the non-rainy season.
- When actively in use, points of ingress and egress must be inspected daily.
- When tracked or spilled sediment is observed outside the construction limits, it must be removed at least daily. More frequent removal, even continuous removal, may be required in some jurisdictions.
- Be careful not to sweep up any unknown substance or any object that may be potentially hazardous.
- Adjust brooms frequently; maximize efficiency of sweeping operations.
- After sweeping is finished, properly dispose of sweeper wastes at an approved dumpsite.

References

Stormwater Quality Handbooks - Construction Site Best Management Practices (BMPs) Manual, State of California Department of Transportation (Caltrans), November 2000.

Labor Surcharge and Equipment Rental Rates, State of California Department of Transportation (Caltrans), April 1, 2002 – March 31, 2003.

Sandbag Barrier SE-8

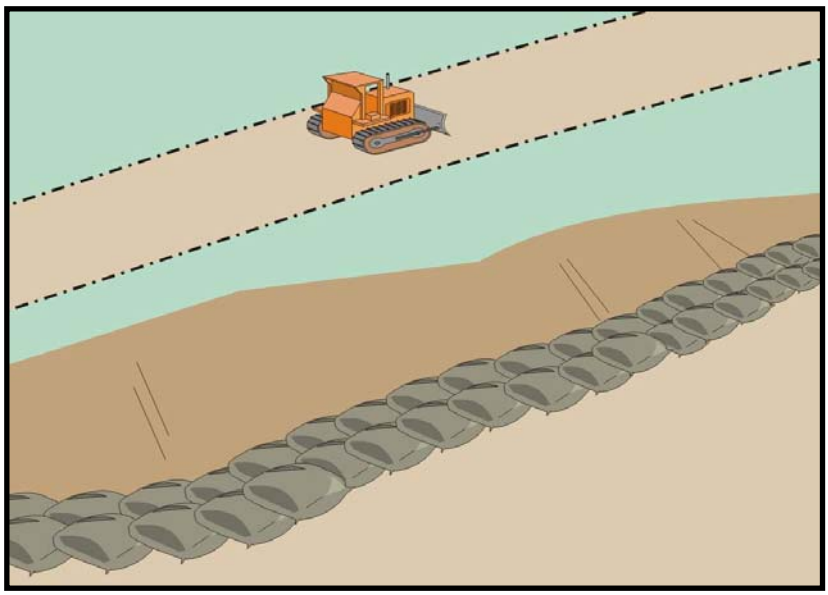

Objectives

EC	Erosion Control	☒
SE	Sediment Control	☑
TR	Tracking Control	
WE	Wind Erosion Control	
NS	Non-Stormwater Management Control	
WM	Waste Management and Materials Pollution Control	

Legend:

☑ **Primary Objective**

☒ **Secondary Objective**

Description and Purpose

A sandbag barrier is a series of sand-filled bags placed on a level contour to intercept sheet flows. Sandbag barriers pond sheet flow runoff, allowing sediment to settle out.

Suitable Applications

Sandbag barriers may be suitable:

- As a linear sediment control measure:
  - Below the toe of slopes and erodible slopes
  - As sediment traps at culvert/pipe outlets
  - Below other small cleared areas
  - Along the perimeter of a site
  - Down slope of exposed soil areas
  - Around temporary stockpiles and spoil areas
  - Parallel to a roadway to keep sediment off paved areas
  - Along streams and channels
- As linear erosion control measure:
  - Along the face and at grade breaks of exposed and erodible slopes to shorten slope length and spread runoff as sheet flow

Targeted Constituents

Sediment	☑
Nutrients	
Trash	
Metals	
Bacteria	
Oil and Grease	
Organics	

Potential Alternatives

SE-1 Silt Fence

SE-5 Fiber Rolls

SE-6 Gravel Bag Berm

SE-9 Straw Bale Barrier

CASQA
CALIFORNIA STORMWATER QUALITY ASSOCIATION

- At the top of slopes to divert runoff away from disturbed slopes
- As check dams across mildly sloped construction roads

Limitations

- It is necessary to limit the drainage area upstream of the barrier to 5 acres.
- Degraded sandbags may rupture when removed, spilling sand.
- Installation can be labor intensive.
- Barriers may have limited durability for long-term projects.
- When used to detain concentrated flows, maintenance requirements increase.
- Burlap should not be used for sandbags.

Implementation

General

A sandbag barrier consists of a row of sand-filled bags placed on a level contour. When appropriately placed, a sandbag barrier intercepts and slows sheet flow runoff, causing temporary ponding. The temporary ponding provides quiescent conditions allowing sediment to settle. While the sand-filled bags are porous, the fine sand tends to quickly plug with sediment, limiting the rate of flow through the barrier. If a porous barrier is desired, consider SE-1, Silt Fence, SE-5, Fiber Rolls, SE-6, Gravel Bag Berms, or SE-9, Straw Bale Barriers. Sandbag barriers also interrupt the slope length and thereby reduce erosion by reducing the tendency of sheet flows to concentrate into rivulets which erode rills, and ultimately gullies, into disturbed, sloped soils. Sandbag barriers are similar to ground bag berms, but less porous.

Design and Layout

- Locate sandbag barriers on a level contour.
  - Slopes between 20:1 and 2:1 (H:V): Sandbags should be placed at a maximum interval of 50 ft (a closer spacing is more effective), with the first row near the slope toe.
  - Slopes 2:1 (H:V) or steeper: Sandbags should be placed at a maximum interval of 25 ft (a closer spacing is more effective), with the first row placed near the slope toe.
- Turn the ends of the sandbag barrier up slope to prevent runoff from going around the barrier.
- Allow sufficient space up slope from the barrier to allow ponding, and to provide room for sediment storage.
- For installation near the toe of the slope, consider moving the barrier away from the slope toe to facilitate cleaning. To prevent flow behind the barrier, sandbags can be placed perpendicular to the barrier to serve as cross barriers.
- Drainage area should not exceed 5 acres.

- Stack sandbags at least three bags high.
- Butt ends of bags tightly.
- Overlapp butt joints of row beneath with each successive row.
- Use a pyramid approach when stacking bags.
- In non-traffic areas
  - Height = 18 in. maximum
  - Top width = 24 in. minimum for three or more layer construction
  - Side slope = 2:1 or flatter
- In construction traffic areas
  - Height = 12 in. maximum
  - Top width = 24 in. minimum for three or more layer construction.
  - Side slopes = 2:1 or flatter.

Materials

- ***Sandbag Material:*** Sandbag should be woven polypropylene, polyethylene or polyamide fabric, minimum unit weight of 4 ounces/yd^2, Mullen burst strength exceeding 300 lb/in^2 in conformance with the requirements in ASTM designation D3786, and ultraviolet stability exceeding 70% in conformance with the requirements in ASTM designation D4355. Use of burlap may not acceptable in some jurisdictions.
- ***Sandbag Size:*** Each sand-filled bag should have a length of 18 in., width of 12 in., thickness of 3 in., and mass of approximately 33 lbs. Bag dimensions are nominal, and may vary based on locally available materials.
- ***Fill Material:*** All sandbag fill material should be non-cohesive, Class 1 or Class 2 permeable material free from clay and deleterious material.

Costs

Sandbag barriers are more costly, but typically have a longer useful life than other barriers. Empty sandbags cost $0.25 - $0.75. Average cost of fill material is $8 per yd^3. Pre-filled sandbags are more expensive at $1.50 - $2.00 per bag.

Inspection and Maintenance

- Inspect BMPs prior to forecast rain, daily during extended rain events, after rain events, weekly during the rainy season, and at two-week intervals during the non-rainy season.
- Sandbags exposed to sunlight will need to be replaced every two to three months due to degradation of the bags.
- Reshape or replace sandbags as needed.

- Repair washouts or other damage as needed.
- Sediment that accumulates in the BMP must be periodically removed in order to maintain BMP effectiveness. Sediment should be removed when the sediment accumulation reaches one-third of the barrier height. Sediment removed during maintenance may be incorporated into earthwork on the site or disposed at an appropriate location.
- Remove sandbags when no longer needed. Remove sediment accumulation, and clean, re-grade, and stabilize the area.

References

Stormwater Quality Handbooks - Construction Site Best Management Practices (BMPs) Manual, State of California Department of Transportation (Caltrans), November 2000.

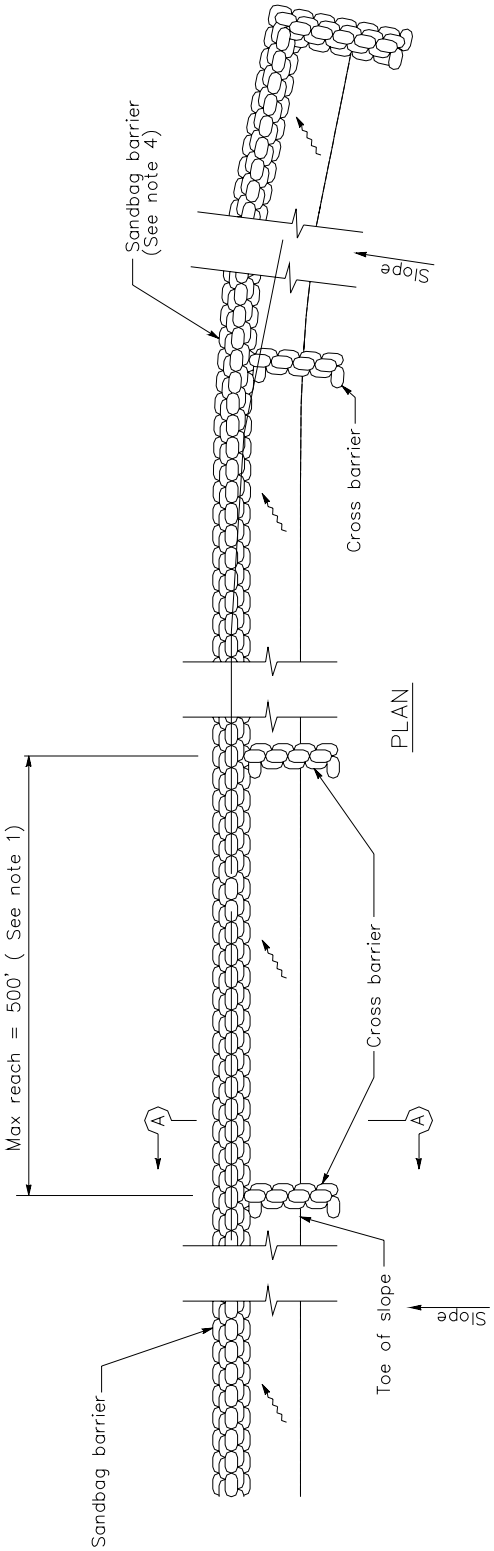

SANDBAG BARRIER

NOTES

1. Construct the length of each reach so that the change in base elevation along the reach does not exceed 1/2 the height of the linear barrier. In no case shall the reach length exceed 500'.
2. Place sandbags tightly.
3. Dimension may vary to fit field condition.
4. Sandbag barrier shall be a minimum of 3 bags high.
5. The end of the barrier shall be turned up slope.
6. Cross barriers shall be a min of 1/2 and a max of 2/3 the height of the linear barrier.
7. Sandbag rows and layers shall be staggered to eliminate gaps.

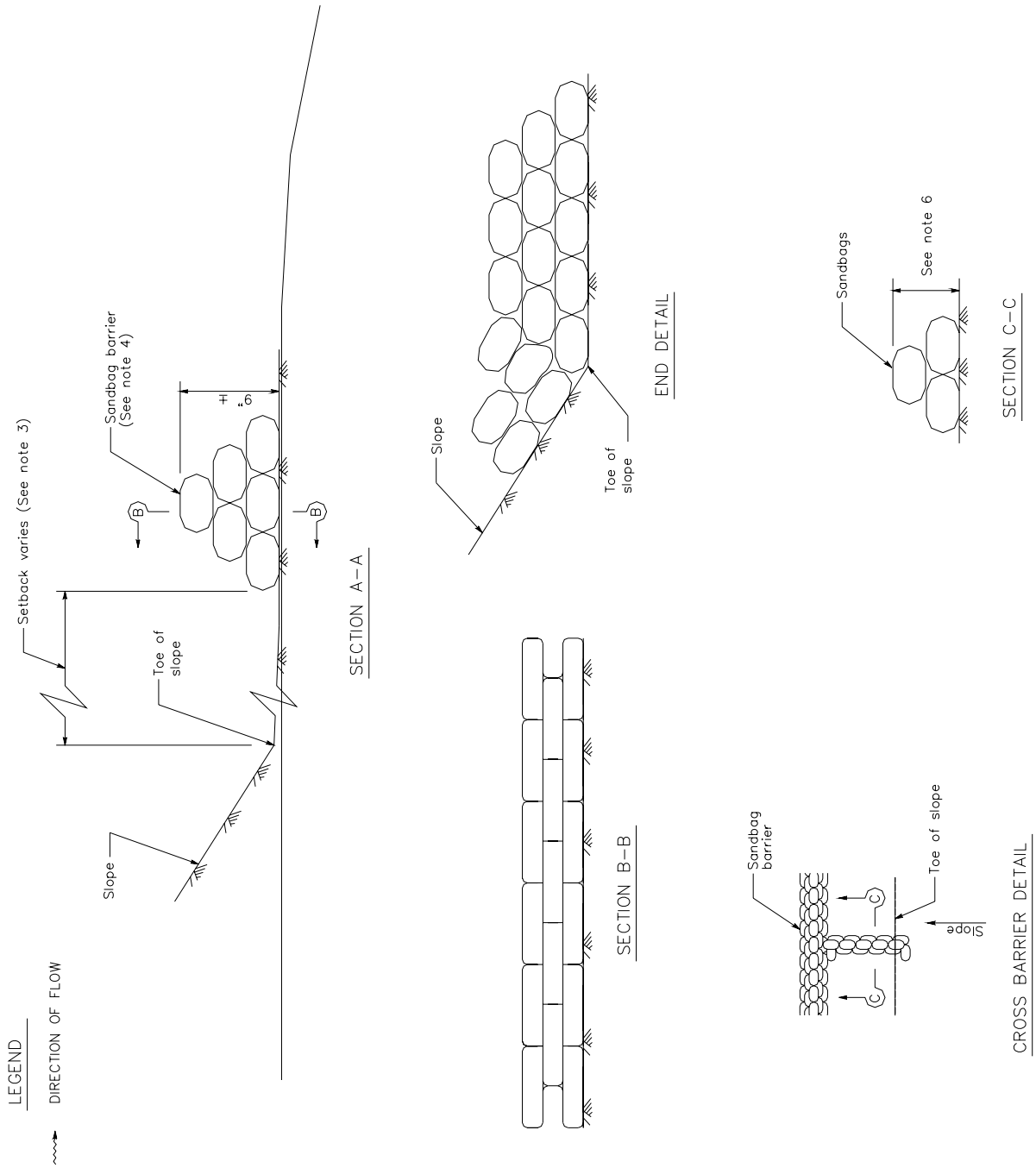
LEGEND
DIRECTION OF FLOW
Setback varies (See note 3)
Sandbag barrier (See note 4)
9"
B
B
Toe of slope
Slope
SECTION A–A
Slope
Toe of slope
END DETAIL
SECTION B–B
Sandbags
See note 6
SECTION C–C
Sandbag barrier
Toe of slope
Slope
C
C
CROSS BARRIER DETAIL

Straw Bale Barrier SE-9

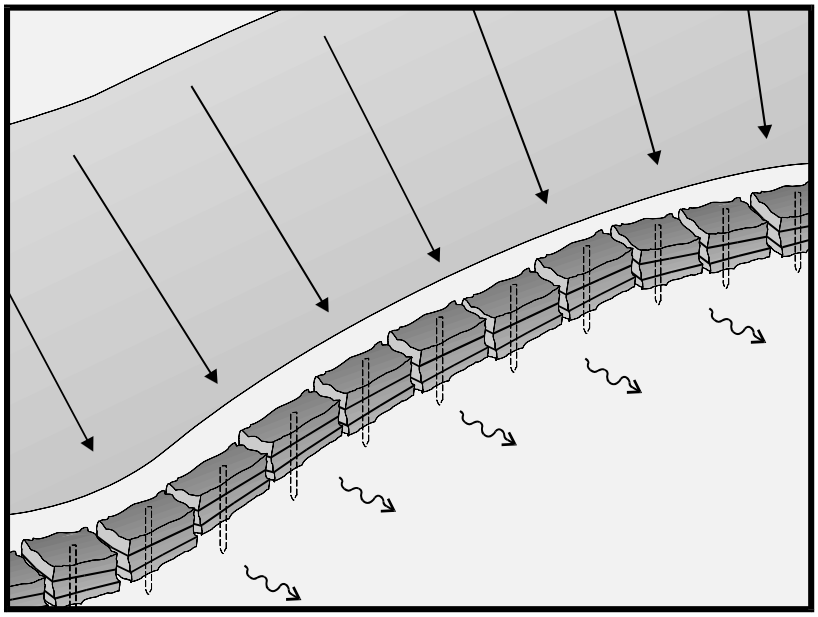

Objectives

EC	Erosion Control	☒
SE	Sediment Control	☑
TR	Tracking Control	
WE	Wind Erosion Control	
NS	Non-Stormwater Management Control	
WM	Waste Management and Materials Pollution Control	

Legend:

☑ **Primary Objective**

☒ **Secondary Objective**

Targeted Constituents

Sediment	☑
Nutrients	
Trash	
Metals	
Bacteria	
Oil and Grease	
Organics	

Potential Alternatives

SE-1 Silt Fence

SE-5 Fiber Rolls

SE-6 Gravel Bag Berm

SE-8 Sandbag Barrier

Description and Purpose

A straw bale barrier is a series of straw bales placed on a level contour to intercept sheet flows. Straw bale barriers pond sheet- flow runoff, allowing sediment to settle out.

Suitable Applications

Straw bale barriers may be suitable:

- As a linear sediment control measure:
  - Below the toe of slopes and erodible slopes
  - As sediment traps at culvert/pipe outlets
  - Below other small cleared areas
  - Along the perimeter of a site
  - Down slope of exposed soil areas
  - Around temporary stockpiles and spoil areas
  - Parallel to a roadway to keep sediment off paved areas
  - Along streams and channels
- As linear erosion control measure:
  - Along the face and at grade breaks of exposed and erodible slopes to shorten slope length and spread runoff as sheet flow

- At the top of slopes to divert runoff away from disturbed slopes
- As check dams across mildly sloped construction roads

Limitations

Straw bale barriers:

- Are not to be used for extended periods of time because they tend to rot and fall apart
- Are suitable only for sheet flow on slopes of 10 % or flatter
- Are not appropriate for large drainage areas, limit to one acre or less
- May require constant maintenance due to rotting
- Are not recommended for concentrated flow, inlet protection, channel flow, and live streams
- Cannot be made of bale bindings of jute or cotton
- Require labor-intensive installation and maintenance
- Cannot be used on paved surfaces
- Should not to be used for drain inlet protection
- Should not be used on lined ditches
- May introduce undesirable non-native plants to the area

Implementation

General

A straw bale barrier consists of a row of straw bales placed on a level contour. When appropriately placed, a straw bale barrier intercepts and slows sheet flow runoff, causing temporary ponding. The temporary ponding provides quiescent conditions allowing sediment to settle. Straw bale barriers also interrupt the slope length and thereby reduce erosion by reducing the tendency of sheet flows to concentrate into rivulets, which erode rills, and ultimately gullies, into disturbed, sloped soils.

Straw bale barriers have not been as effective as expected due to improper use. These barriers have been placed in streams and drainage ways where runoff volumes and velocities have caused the barriers to wash out. In addition, failure to stake and entrench the straw bale has allowed undercutting and end flow. Use of straw bale barriers in accordance with this BMP should produce acceptable results.

Design and Layout

- Locate straw bale barriers on a level contour.
  - Slopes up to 10:1 (H:V): Straw bales should be placed at a maximum interval of 50 ft (a closer spacing is more effective), with the first row near the toe of slope.
  - Slopes greater than 10:1 (H:V): Not recommended.

- Turn the ends of the straw bale barrier up slope to prevent runoff from going around the barrier.
- Allow sufficient space up slope from the barrier to allow ponding, and to provide room for sediment storage.
- For installation near the toe of the slope, consider moving the barrier away from the slope toe to facilitate cleaning. To prevent flow behind the barrier, sand bags can be placed perpendicular to the barrier to serve as cross barriers.
- Drainage area should not exceed 1 acre, or 0.25 acre per 100 ft of barrier.
- Maximum flow path to the barrier should be limited to 100 ft.
- Straw bale barriers should consist of two parallel rows.
  - Butt ends of bales tightly
  - Stagger butt joints between front and back row
  - Each row of bales must be trenched in and firmly staked
- Straw bale barriers are limited in height to one bale laid on its side.
- Anchor bales with either two wood stakes or four bars driven through the bale and into the soil. Drive the first stake towards the butt joint with the adjacent bale to force the bales together.
- See attached figure for installation details.

Materials

- ***Straw Bale Size:*** Each straw bale should be a minimum of 14 in. wide, 18 in. in height, 36 in. in length and should have a minimum mass of 50 lbs. The straw bale should be composed entirely of vegetative matter, except for the binding material.
- ***Bale Bindings:*** Bales should be bound by steel wire, nylon or polypropylene string placed horizontally. Jute and cotton binding should not be used. Baling wire should be a minimum diameter of 14 gauge. Nylon or polypropylene string should be approximately 12 gauge in diameter with a breaking strength of 80 lbs force.
- ***Stakes:*** Wood stakes should be commercial quality lumber of the size and shape shown on the plans. Each stake should be free from decay, splits or cracks longer than the thickness of the stake, or other defects that would weaken the stakes and cause the stakes to be structurally unsuitable. Steel bar reinforcement should be equal to a #4 designation or greater. End protection should be provided for any exposed bar reinforcement.

Costs

Straw bales cost $5 - $7 each. Adequate labor should be budgeted for installation and maintenance.

Inspection and Maintenance

Maintenance

- Inspect BMPs prior to forecast rain, daily during extended rain events, after rain events, weekly during the rainy season, and at two-week intervals during the non-rainy season.
- Straw bales degrade, especially when exposed to moisture. Rotting bales will need to be replaced on a regular basis.
- Replace or repair damaged bales as needed.
- Repair washouts or other damages as needed.
- Sediment that accumulates in the BMP must be periodically removed in order to maintain BMP effectiveness. Sediment should be removed when the sediment accumulation reaches one-third of the barrier height. Sediment removed during maintenance may be incorporated into earthwork on the site or disposed at an appropriate location.
- Remove straw bales when no longer needed. Remove sediment accumulation, and clean, re-grade, and stabilize the area. Removed sediment should be incorporated in the project or disposed of.

References

Stormwater Quality Handbooks - Construction Site Best Management Practices (BMPs) Manual, State of California Department of Transportation (Caltrans), November 2000.

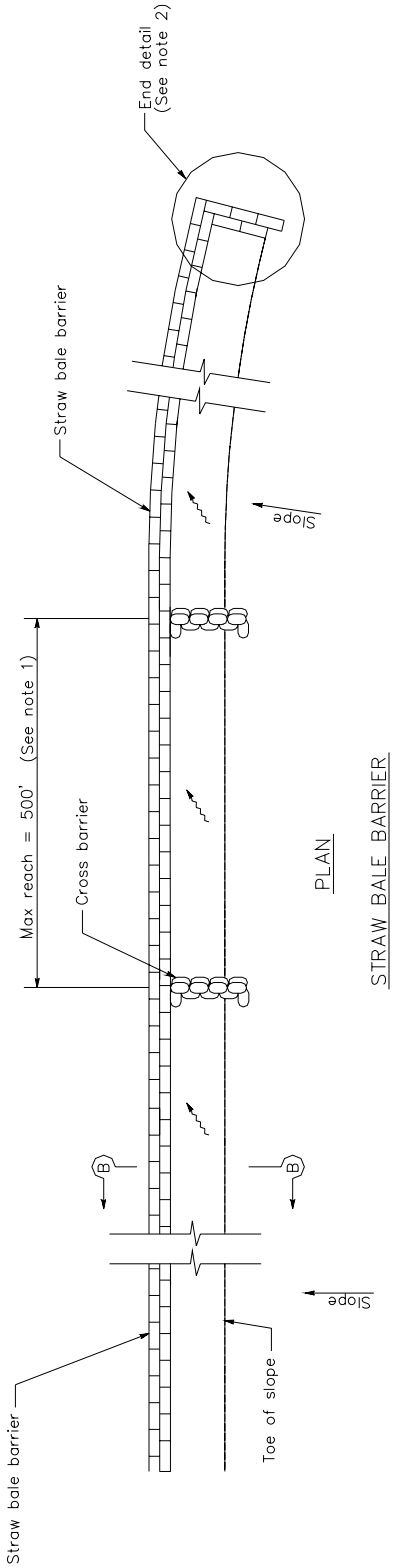

PLAN

STRAW BALE BARRIER

LEGEND

DIRECTION OF FLOW

NOTES

1. Construct the length of each reach so that the change in base elevation along the reach does not exceed 1/2 the height of the linear barrier. In no case shall the reach length exceed 500'.
2. The end of barrier shall be turned up slope.
3. Dimension may vary to fit field condition.
4. Stake dimensions are nominal.
5. Place straw bales tightly together.
6. Tamp embedment spoils against sides of installed bales.
7. Drive angled wood stake before vertical stake to ensure tight abutment to adjacent bale.
8. Sandbag cross barriers should be a min of 1/2 and a max of 2/3 the height of the linear barrier.
9. Sandbag rows and layers should be offset to eliminate gaps.

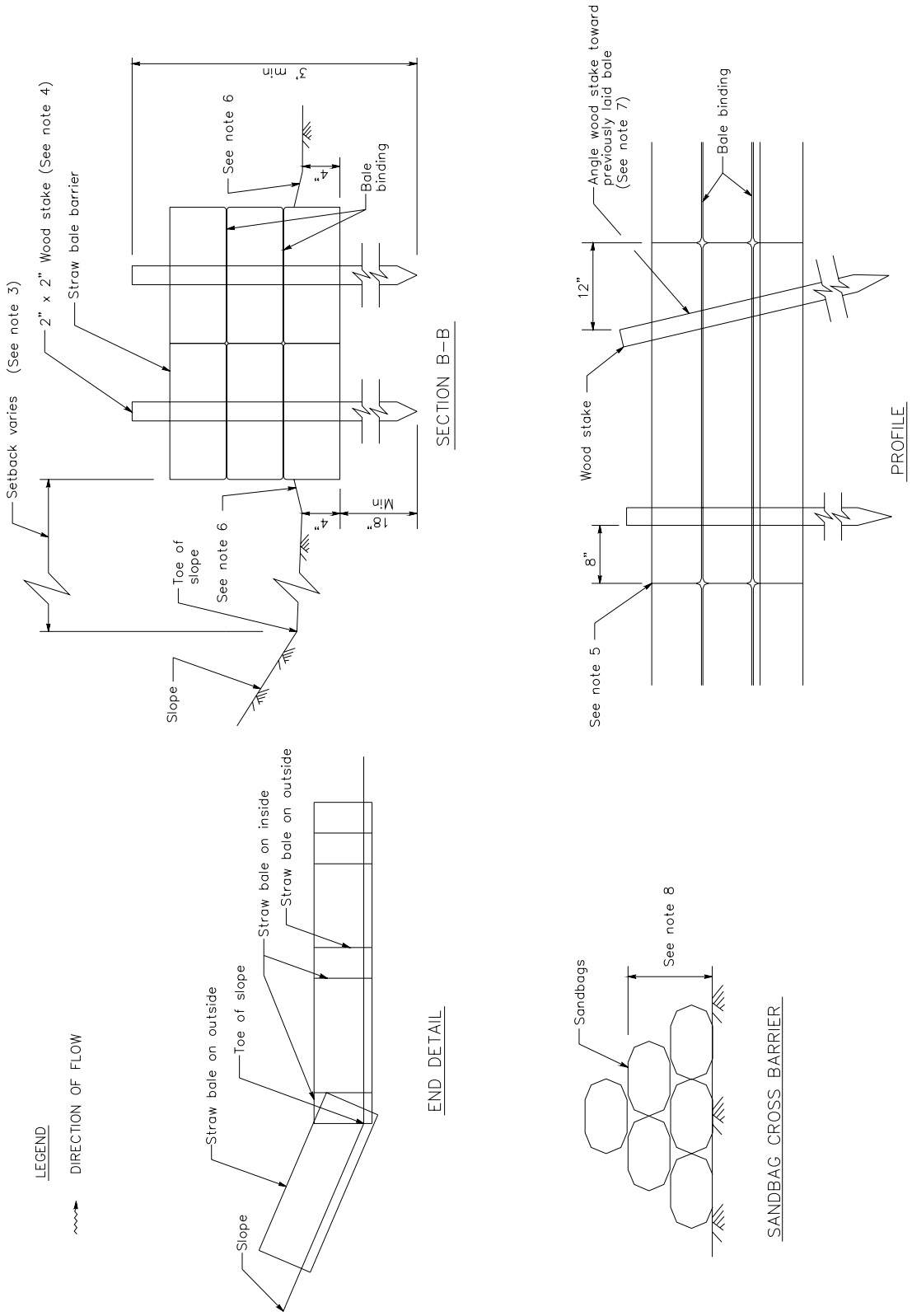
Setback varies (See note 3)
2" x 2" Wood stake (See note 4)
Straw bale barrier
3' Min
See note 6
4"
Bale binding
Toe of slope
See note 6
4"
10" Min
Slope
SECTION B-B
Angle wood stake toward previously laid bale (See note 7)
Bale binding
12"
Wood stake
8"
See note 5
PROFILE
LEGEND
DIRECTION OF FLOW
Straw bale on inside
Straw bale on outside
Straw bale on outside
Toe of slope
Slope
END DETAIL
Sandbags
See note 8
SANDBAG CROSS BARRIER

Storm Drain Inlet Protection SE-10

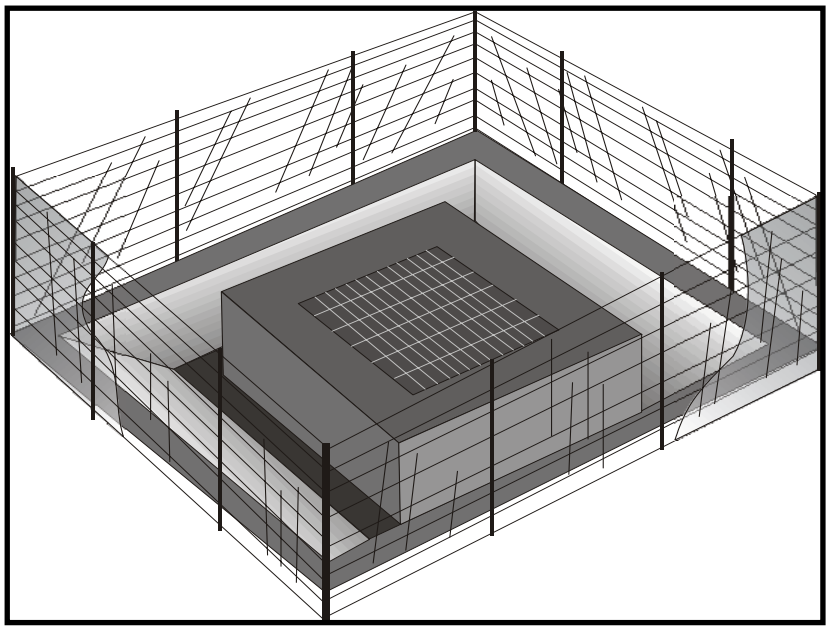

Objectives

EC	Erosion Control	
SE	Sediment Control	☑
TR	Tracking Control	
WE	Wind Erosion Control	
NS	Non-Stormwater Management Control	
WM	Waste Management and Materials Pollution Control	

Legend:

☑ **Primary Objective**

☒ **Secondary Objective**

Targeted Constituents

Sediment	☑
Nutrients	
Trash	☑
Metals	
Bacteria	
Oil and Grease	
Organics	

Potential Alternatives

SE-1 Silt Fence

SE-5 Fiber Rolls

SE-6 Gravel Bag Berm

SE-8 Sandbag Barrier

SE-9 Straw Bale Barrier

Description and Purpose

Storm drain inlet protection consists of a sediment filter or an impounding area around or upstream of a storm drain, drop inlet, or curb inlet. Storm drain inlet protection measures temporarily pond runoff before it enters the storm drain, allowing sediment to settle. Some filter configurations also remove sediment by filtering, but usually the ponding action results in the greatest sediment reduction.

Suitable Applications

Every storm drain inlet receiving sediment-laden runoff should be protected.

Limitations

- Drainage area should not exceed 1 acre.
- Straw bales, while potentially effective, have not produced in practice satisfactory results, primarily due to improper installation.
- Requires an adequate area for water to pond without encroaching into portions of the roadway subject to traffic.
- Inlet protection usually requires other methods of temporary protection to prevent sediment-laden stormwater and non-stormwater discharges from entering the storm drain system.
- Sediment removal may be difficult in high flow conditions or if runoff is heavily sediment laden. If high flow conditions are

expected, use other onsite sediment trapping techniques in conjunction with inlet protection.

- Frequent maintenance is required.
- For drainage areas larger than 1 acre, runoff should be routed to a sediment-trapping device designed for larger flows. See BMPs SE-2, Sediment Basin, and SE-3, Sediment Traps.
- Excavated drop inlet sediment traps are appropriate where relatively heavy flows are expected, and overflow capability is needed.

Implementation

General

Large amounts of sediment may enter the storm drain system when storm drains are installed before the upslope drainage area is stabilized, or where construction is adjacent to an existing storm drain. In cases of extreme sediment loading, the storm drain itself may clog and lose a major portion of its capacity. To avoid these problems, it is necessary to prevent sediment from entering the system at the inlets.

Inlet control measures presented in this handbook should not be used for inlets draining more than one acre. Runoff from larger disturbed areas should be first routed through SE-2, Sediment Basin or SE-3, Sediment Trap. Different types of inlet protection are appropriate for different applications depending on site conditions and the type of inlet. Inlet protection methods not presented in this handbook should be approved by the local stormwater management agency.

Design and Layout

Identify existing and planned storm drain inlets that have the potential to receive sediment-laden surface runoff. Determine if storm drain inlet protection is needed and which method to use.

- Limit upstream drainage area to 1 acre maximum. For larger drainage areas, use SE-2, Sediment Basin, or SE-3, Sediment Trap, upstream of the inlet protection device.
- The key to successful and safe use of storm drain inlet protection devices is to know where runoff will pond or be diverted.
  - Determine the acceptable location and extent of ponding in the vicinity of the drain inlet. The acceptable location and extent of ponding will influence the type and design of the storm drain inlet protection device.
  - Determine the extent of potential runoff diversion caused by the storm drain inlet protection device. Runoff ponded by inlet protection devices may flow around the device and towards the next downstream inlet. In some cases, this is acceptable; in other cases, serious erosion or downstream property damage can be caused by these diversions. The possibility of runoff diversions will influence whether or not storm drain inlet protection is suitable; and, if suitable, the type and design of the device.
- The location and extent of ponding, and the extent of diversion, can usually be controlled through appropriate placement of the inlet protection device. In some cases, moving the

inlet protection device a short distance upstream of the actual inlet can provide more efficient sediment control, limit ponding to desired areas, and prevent or control diversions.

- Four types of inlet protection are presented below. However, it is recognized that other effective methods and proprietary devices exist and may be selected.
  - Filter Fabric Fence: Appropriate for drainage basins with less than a 5% slope, sheet flows, and flows under 0.5 cfs.
  - Excavated Drop Inlet Sediment Trap: An excavated area around the inlet to trap sediment (SE-3).
  - Gravel bag barrier: Used to create a small sediment trap upstream of inlets on sloped, paved streets. Appropriate for sheet flow or when concentrated flow may exceed 0.5 cfs, and where overtopping is required to prevent flooding.
  - Block and Gravel Filter: Appropriate for flows greater than 0.5 cfs.
- Select the appropriate type of inlet protection and design as referred to or as described in this fact sheet.
- Provide area around the inlet for water to pond without flooding structures and property.
- Grates and spaces around all inlets should be sealed to prevent seepage of sediment-laden water.
- Excavate sediment sumps (where needed) 1 to 2 ft with 2:1 side slopes around the inlet.

Installation

- ***DI Protection Type 1 - Filter Fabric Fence -*** The filter fabric fence (Type 1) protection is shown in the attached figure. Similar to constructing a silt fence; see BMP SE-1, Silt Fence. Do not place filter fabric underneath the inlet grate since the collected sediment may fall into the drain inlet when the fabric is removed or replaced.
  1. Excavate a trench approximately 6 in. wide and 6 in. deep along the line of the silt fence inlet protection device.
  2. Place 2 in. by 2 in. wooden stakes around the perimeter of the inlet a maximum of 3 ft apart and drive them at least 18 in. into the ground or 12 in. below the bottom of the trench. The stakes must be at least 48 in.
  3. Lay fabric along bottom of trench, up side of trench, and then up stakes. See SE-1, Silt Fence, for details. The maximum silt fence height around the inlet is 24 in.
  4. Staple the filter fabric (for materials and specifications, see SE-1, Silt Fence) to wooden stakes. Use heavy-duty wire staples at least 1 in. in length.
  5. Backfill the trench with gravel or compacted earth all the way around.
- ***DI Protection Type 2 - Excavated Drop Inlet Sediment Trap -*** The excavated drop inlet sediment trap (Type 2) is shown in the attached figures. Install filter fabric fence in

accordance with DI Protection Type 1. Size excavated trap to provide a minimum storage capacity calculated at the rate 67 yd^3/acre of drainage area.

- ***DI Protection Type 3 - Gravel bag -*** The gravel bag barrier (Type 3) is shown in the figures. Flow from a severe storm should not overtop the curb. In areas of high clay and silts, use filter fabric and gravel as additional filter media. Construct gravel bags in accordance with SE-6, Gravel Bag Berm. Gravel bags should be used due to their high permeability.

  1. Use sand bag made of geotextile fabric (not burlap) and fill with 0.75 in. rock or 0.25 in. pea gravel.
  2. Construct on gently sloping street.
  3. Leave room upstream of barrier for water to pond and sediment to settle.
  4. Place several layers of sand bags – overlapping the bags and packing them tightly together.
  5. Leave gap of one bag on the top row to serve as a spillway. Flow from a severe storm (e.g., 10 year storm) should not overtop the curb.

- ***DI Protection Type 4 – Block and Gravel Filter -*** The block and gravel filter (Type 4) is shown in the figures. Block and gravel filters are suitable for curb inlets commonly used in residential, commercial, and industrial construction.

  1. Place hardware cloth or comparable wire mesh with 0.5 in. openings over the drop inlet so that the wire extends a minimum of 1 ft beyond each side of the inlet structure. If more than one strip is necessary, overlap the strips. Place filter fabric over the wire mesh.
  2. Place concrete blocks lengthwise on their sides in a single row around the perimeter of the inlet, so that the open ends face outward, not upward. The ends of adjacent blocks should abut. The height of the barrier can be varied, depending on design needs, by stacking combinations of blocks that are 4 in., 8 in., and 12 in. wide. The row of blocks should be at least 12 in. but no greater than 24 in. high.
  3. Place wire mesh over the outside vertical face (open end) of the concrete blocks to prevent stone from being washed through the blocks. Use hardware cloth or comparable wire mesh with 0.5 in. opening.
  4. Pile washed stone against the wire mesh to the top of the blocks. Use 0.75 to 3 in.

Costs

- Average annual cost for installation and maintenance (one year useful life) is $200 per inlet.

Inspection and Maintenance

- Inspect BMPs prior to forecast rain, daily during extended rain events, after rain events, weekly during the rainy season, and at two-week intervals during the non-rainy season.

- Filter Fabric Fences. If the fabric becomes clogged, torn, or degrades, it should be replaced. Make sure the stakes are securely driven in the ground and are in good shape (i.e., not bent, cracked, or splintered, and are reasonably perpendicular to the ground). Replace damaged stakes.

- Gravel Filters. If the gravel becomes clogged with sediment, it must be carefully removed from the inlet and either cleaned or replaced. Since cleaning gravel at a construction site may be difficult, consider using the sediment-laden stone as fill material and put fresh stone around the inlet. Inspect bags for holes, gashes, and snags, and replace bags as needed. Check gravel bags for proper arrangement and displacement.

- Sediment that accumulates in the BMP must be periodically removed in order to maintain BMP effectiveness. Sediment should be removed when the sediment accumulation reaches one-third of the barrier height. Sediment removed during maintenance may be incorporated into earthwork on the site ore disposed at an appropriate location.

- Remove storm drain inlet protection once the drainage area is stabilized.

  - Clean and regrade area around the inlet and clean the inside of the storm drain inlet as it must be free of sediment and debris at the time of final inspection.

References

Stormwater Quality Handbooks - Construction Site Best Management Practices (BMPs) Manual, State of California Department of Transportation (Caltrans), November 2000.

Stormwater Management Manual for The Puget Sound Basin, Washington State Department of Ecology, Public Review Draft, 1991.

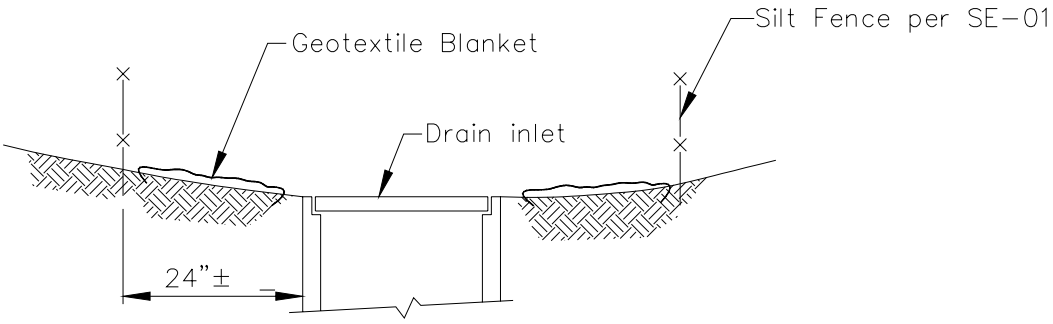

SECTION A–A

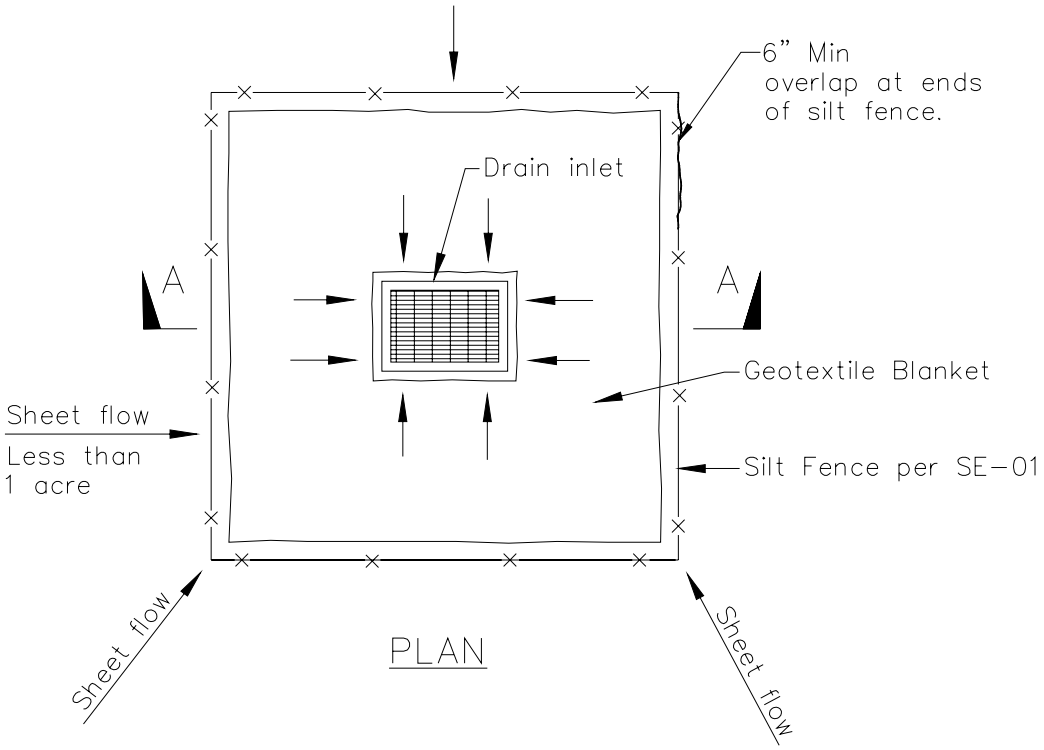

PLAN

DI PROTECTION TYPE 1
NOT TO SCALE

NOTES:

1. For use in areas where grading has been completed and final soil stabilization and seeding are pending.
2. Not applicable in paved areas.
3. Not applicable with concentrated flows.

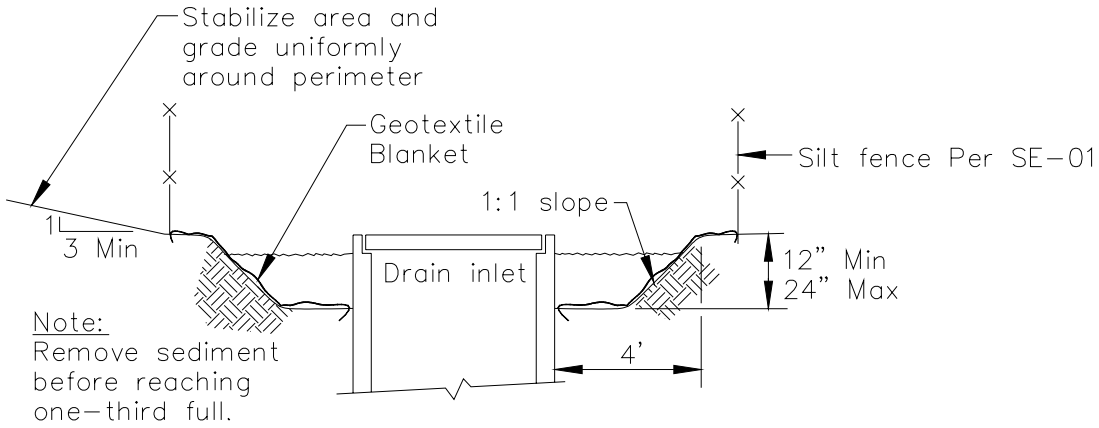

Section A–A

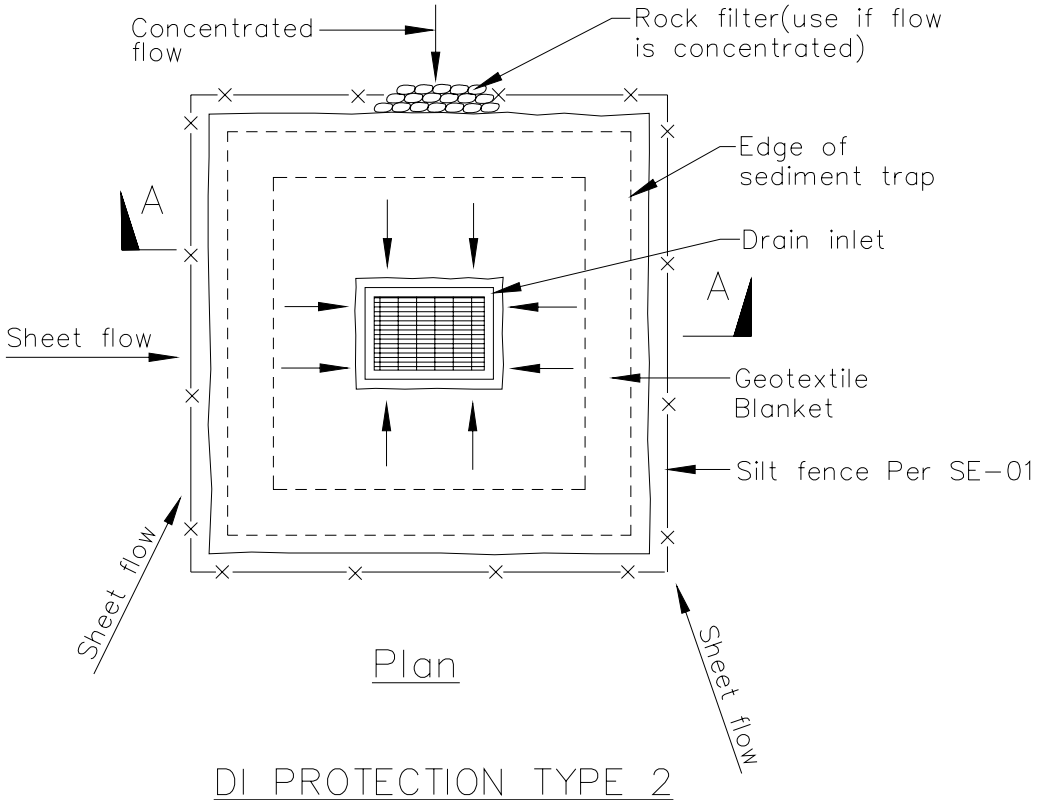

Plan

DI PROTECTION TYPE 2
NOT TO SCALE

Notes
1. For use in cleared and grubbed and in graded areas.
2. Shape basin so that longest inflow area faces longest length of trap.
3. For concentrated flows, shape basin in 2:1 ratio with length oriented towards direction of flow.

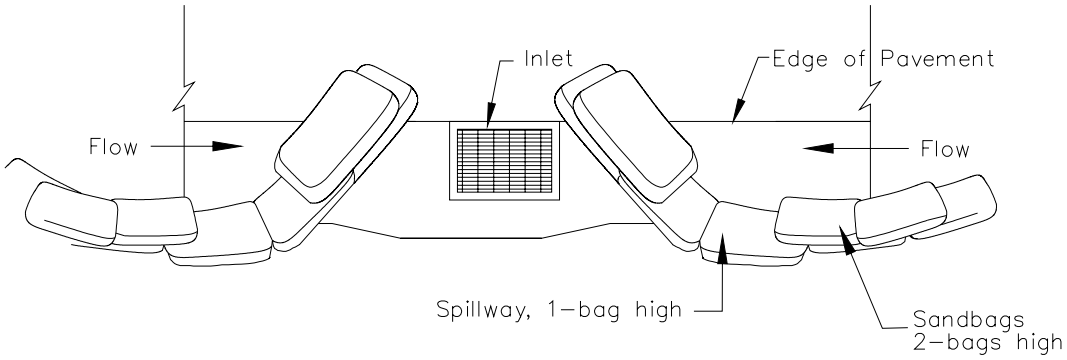

TYPICAL PROTECTION FOR INLET ON SUMP

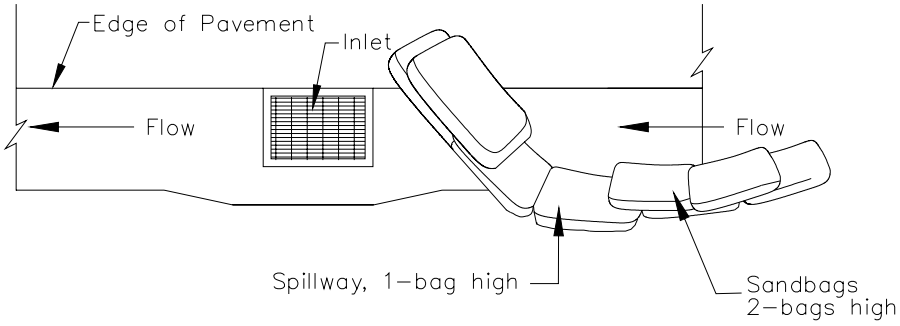

TYPICAL PROTECTION FOR INLET ON GRADE

NOTES:

1. Intended for short–term use.
2. Use to inhibit non–storm water flow.
3. Allow for proper maintenance and cleanup.
4. Bags must be removed after adjacent operation is completed
5. Not applicable in areas with high silts and clays without filter fabric.

DI PROTECTION TYPE 3
NOT TO SCALE

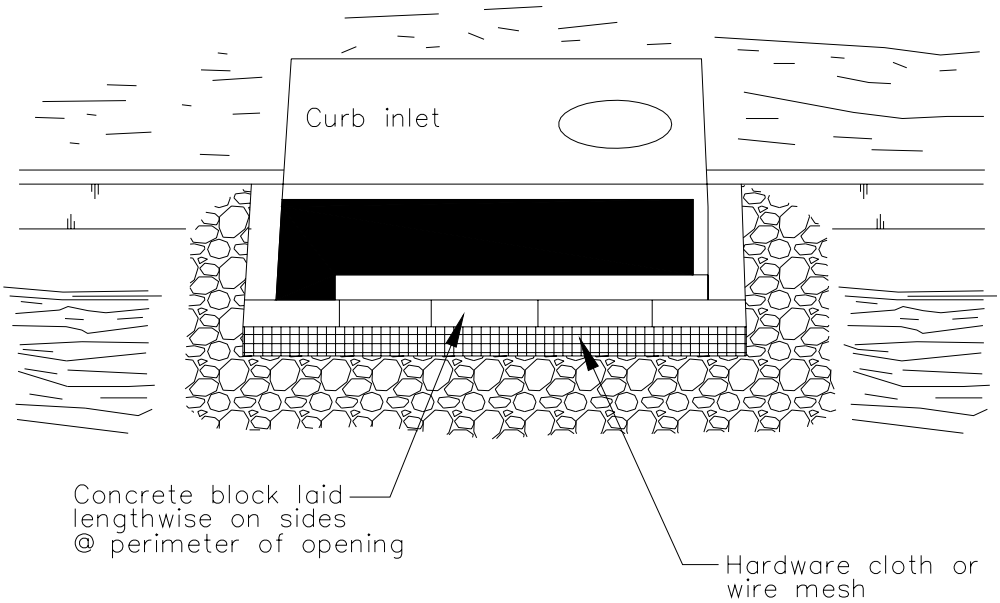

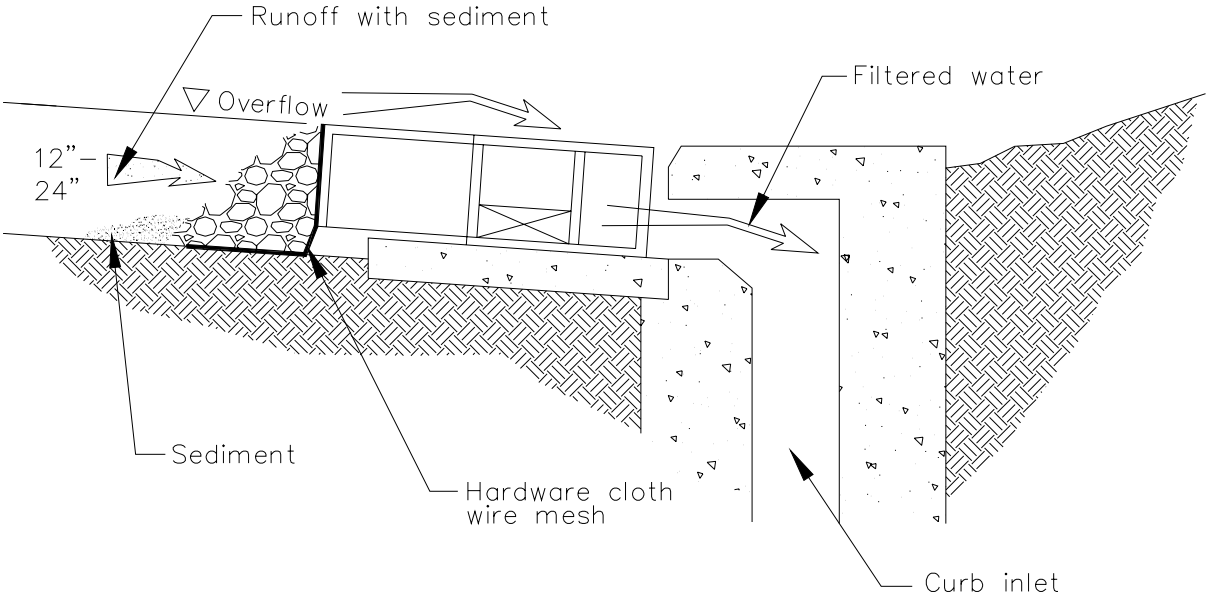

DI PROTECTION – TYPE 4

NOT TO SCALE

Chemical Treatment SE-11

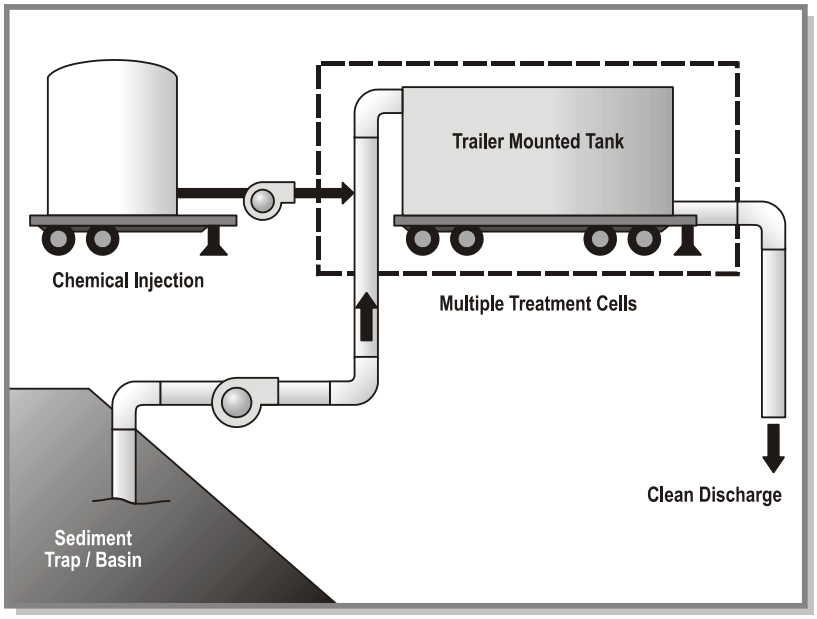

Objectives

EC	Erosion Control
SE	Sediment Control
TR	Tracking Control
WE	Wind Erosion Control
NS	Non-Stormwater Management Control
WM	Waste Management and Materials Pollution Control

Legend:

☑ **Primary Objective**

☒ **Secondary Objective**

Targeted Constituents

Sediment	☑
Nutrients	
Trash	
Metals	
Bacteria	
Oil and Grease	
Organics	

Potential Alternatives

None

Description and Purpose

Chemical treatment includes the application of chemicals to stormwater to aid in the reduction of turbidity caused by fine suspended sediment.

Suitable Applications

Chemical treatment can reliably provide exceptional reductions of turbidity and associated pollutants and should be considered where turbid discharges to sensitive wastes cannot be avoided using other BMPs. Typically, chemical use is limited to waters with numeric turbidity standards.

Limitations

The use of chemical treatment must have the advanced approval of the Regional Water Quality Control Board.

- Chemical Treatment of stormwater is relatively new and unproven technology in California.
- BMP has not been used often in California
- Petroleum based polymers should not be used
- Requires sediment basin or trailer mounted unit for chemical application
- Batch treatment required, flow through continuous treatment not allowed
- Requires large area

- Limited discharge rates depending on receiving water body
- Labor intensive operation and maintenance
- Requires monitoring for non-visible pollutants

Implementation

Turbidity is difficult to control once fine particles are suspended in stormwater runoff from a construction site. Sedimentation ponds are effective at removing larger particulate matter by gravity settling, but are ineffective at removing smaller particulates such as clay and fine silt. Sediment ponds are typically designed to remove sediment no smaller than medium silt (0.02 mm). Chemical treatment may be used to reduce the turbidity of stormwater runoff. Very high turbidities can be reduced to levels comparable to what is found in streams during dry weather.

Criteria for Chemical Treatment Product Use

Chemically treated stormwater discharged from construction sites must be non-toxic to aquatic organisms. The following protocol should be used to evaluate chemicals proposed for stormwater treatment at construction sites. Authorization to use a chemical in the field based on this protocol does not relieve the applicant from responsibility for meeting all discharge and receiving water criteria applicable to a site.

- Treatment chemicals must be approved by EPA for potable water use.
- Petroleum-based polymers are prohibited.
- Prior to authorization for field use, jar tests should be conducted to demonstrate that turbidity reduction necessary to meet the receiving water criteria could be achieved. Test conditions, including but not limited to raw water quality and jar test procedures, should be indicative of field conditions. Although these small-scale tests cannot be expected to reproduce performance under field conditions, they are indicative of treatment capability.
- Prior to authorization for field use, the chemically treated stormwater should be tested for aquatic toxicity. Applicable state or local Whole Effluent Toxicity Testing and Limits, should be used. Testing should use stormwater from the construction site at which the treatment chemical is proposed for use or a water solution using soil from the proposed site.
- The proposed maximum dosage should be at least a factor of five lower than the no observed effects concentration (NOEC).
- The approval of a proposed treatment chemical should be conditional, subject to full-scale bioassay monitoring of treated stormwater at the construction site where the proposed treatment chemical is to be used.
- Treatment chemicals that have already passed the above testing protocol do not need to be reevaluated. Contact the RWQCB for a list of treatment chemicals that may be approved for use.

Treatment System Design Considerations

The design and operation of a chemical treatment system should take into consideration the factors that determine optimum, cost-effective performance. It may not be possible to fully

incorporate all of the classic concepts into the design because of practical limitations at construction sites. Nonetheless, it is important to recognize the following:

- The right chemical must be used at the right dosage. A dosage that is either too low or too high will not produce the lowest turbidity. There is an optimum dosage rate. This is a situation where the adage "adding more is always better" is not the case.
- The coagulant must be mixed rapidly into the water to insure proper dispersion.
- Experience has found that sufficient flocculation occurs in the pipe leading from the point of chemical addition to the settling or sediment basin.
- Since the volume of the basin is a determinant in the amount of energy per unit volume, the size of the energy input system can be too small relative to the volume of the basin.
- Care must be taken in the design of the withdrawal system to minimize outflow velocities and to prevent floc discharge. The discharge should be directed through a physical filter such as vegetated swale that would catch any unintended floc discharge.
- A pH-adjusting chemical should be added into the sediment basin to control pH. Experience shows that the most common problem is low pH.

Treatment System Design

Chemical treatment systems should be designed as batch treatment systems using either ponds or portable trailer-mounted tanks. Flow-through continuous treatment systems are not allowed at this time.

A chemical treatment system consists of the stormwater collection system (either temporary diversion or the permanent site drainage system), a sediment basin or sediment trap, pumps, a chemical feed system, treatment cells, and interconnecting piping.

The treatment system should use a minimum of two lined treatment cells. Multiple treatment cells allow for clarification of treated water while other cells are being filled or emptied. Treatment cells may be basins, traps or tanks. Portable tanks may also be suitable for some sites.

The following equipment should be located in an operation shed:

- The chemical injector
- Secondary contaminant for acid, caustic, buffering compound, and treatment chemical
- Emergency shower and eyewash
- Monitoring equipment which consists of a pH meter and a turbidimeter

Sizing Criteria

The combination of the sediment basin or other holding area and treatment capacity should be large enough to treat stormwater during multiple day storm events. See SE-2, Sediment Basin, for design criteria. Bypass should be provided around the chemical treatment system to

accommodate extreme storm events. Runoff volume should be calculated using the Rational Method. Primary settling should be encouraged in the sediment basin/storage pond. A forebay with access for maintenance may be beneficial.

There are two opposing considerations in sizing the treatment cells. A larger cell is able to treat a larger volume of water each time a batch is processed. However, the larger the cell the longer the time required to empty the cell. A larger cell may also be less effective at flocculation and therefore require a longer settling time. The simplest approach to sizing the treatment cell is to multiply the allowable discharge flow rate times the desired drawdown time. A 4-hour drawdown time allows one batch per cell per 8-hour work period, given 1 hour of flocculation followed by 2 hours of settling.

The permissible discharge rate governed by potential downstream effect can be used to calculate the recommended size of the treatment cells. The following discharge flow rate limits apply absent any local requirements:

- If the discharge is direct or indirect to a stream, the discharge flow rate should not exceed 50 percent of the peak flow rate for all events between the 2-year and the 10-year, 24-hour event.
- If discharge is occuring during a storm event equal to or greater than the 10-year storm the allowable discharge rate is the peak flow rate of the 10-year, 24-hour event.
- Discharge to a stream should not increase the stream flow rate by more than 10 percent.
- If the discharge is directly to a lake or major receiving water there is no discharge flow limit.
- If the discharge is to a municipal storm drainage system, the allowable discharge rate may be limited by the capacity of the public system. It may be necessary to clean the municipal storm drainage system prior to the start of the discharge to prevent scouring solids from the drainage system.
- Runoff rates may be calculated using the Rational Method, unless another method is required by the local flood control agency or agency that issued the grading permit.

Costs

Costs for chemical treatment may be significant due to equipment required and cost of chemicals. The cost is offset by the ability to reduce some use of other onsite erosion control BMPs and the reuse of equipment (e.g., pumps and dosing equipment). The incremental cost is generally less than 1% of the total construction costs.

Inspection and Maintenance

Chemical treatment systems must be operated and maintained by individuals with expertise in their use. Chemical treatment systems should be monitored continuously while in use.

The following monitoring should be conducted. Test results should be recorded on a daily log kept on site.

Operational Monitoring

- pH conductivity (as a surrogate for alkalinity), turbidity, and temperature of the untreated stormwater
- Total volume treated and discharged
- Discharge time and flow rate
- Type and amount of chemical used for pH adjustment
- Amount of polymer used for treatment
- Settling time

Compliance Monitoring

- pH and turbidity of the treated stormwater
- pH and turbidity of the receiving water

Bio-monitoring

Treated stormwater should be tested for acute (lethal) toxicity. Bioassays should be conducted by a laboratory accredited by the State of California. **The performance standard for acute toxicity is no statistically significant difference in survival between the control and 100 percent chemically treated stormwater.**

Acute toxicity tests should be conducted with the following species and protocols:

- Fathead minnow, Pimephales promelas (96 hour static-renewal test, method: EPA/600/4-90/027F). Rainbow trout, Oncorhynchus mykiss (96 hour static-renewal test, method: EPA/600/4-90/027F) may be used as a substitute for fathead minnow.
- Daphnid, Ceriodaphnia dubia, Daphnia pulex, or Daphnia magna (48 hour static test, method: EPA/600/4-90/027F).

All toxicity tests should meet quality assurance criteria and test conditions in the most recent versions of the EPA test method.

Bioassays should be performed on the first five batches and on every tenth batch thereafter or as otherwise approved by the RWQCB. Failure to meet the performance standard should be immediately reported to the RWQCB.

Discharge Compliance:

Prior to discharge, each batch of treated stormwater must be sampled and tested for compliance with pH and turbidity limits. These limits may be established by the water quality standards or a site-specific discharge permit. Sampling and testing for other pollutants may also be necessary at some sites. Turbidity must be within 5 NTUs of the background turbidity. Background is measured in the receiving water, upstream from the treatment process discharge point. pH must be within the range of 6.5 to 8.5 standard units and not cause a change in the pH of the receiving water of more than 0.2 standard units. It is often

possible to discharge treated stormwater that has a lower turbidity than the receiving water and that matches the pH.

Treated stormwater samples and measurements should be taken from the discharge pipe or another location representative of the nature of the treated stormwater discharge. Samples used for determining compliance with the water quality standards in the receiving water should not be taken from the treatment pond to decanting. Compliance with the water quality standards is determined in the receiving water.

Operator Training:

Each contractor who intends to use chemical treatment should be trained by an experienced contractor on an active site for at least 40 hours.

Standard BMPs:

Erosion and sediment control BMPs should be implemented throughout the site to prevent erosion and discharge of sediment.

Sediment Removal and Disposal

- Sediment should be removed from the storage or treatment cells as necessary. Typically, sediment removal is required at least once during a wet season and at the decommissioning of the cells. Sediment remaining in the cells between batches may enhance the settling process and reduce the required chemical dosage.

- Sediment may be incorporated into the site away from drainages.

References

Stormwater Management Manual for Western Washington, Volume II – Construction Stormwater Pollution Prevention, Washington State Department of Ecology, August 2001.

Stormwater Quality Handbooks - Construction Site Best Management Practices (BMPs) Manual, State of California Department of Transportation (Caltrans), November 2000.

Wind Erosion Control WE-1

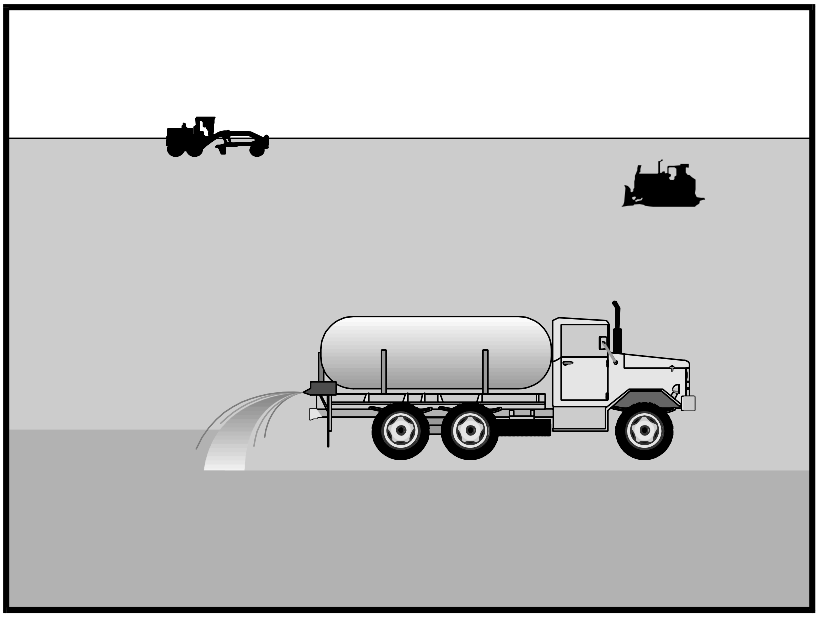

Objectives

EC	Erosion Control	
SE	Sediment Control	☒
TC	Tracking Control	
WE	Wind Erosion Control	☑
NS	Non-Stormwater Management Control	
WM	Waste Management and Materials Pollution Control	

Legend:

☑ **Primary Objective**

☒ **Secondary Objective**

Targeted Constituents

Sediment	☑
Nutrients	
Trash	
Metals	
Bacteria	
Oil and Grease	
Organics	

Potential Alternatives

None

Description and Purpose

Wind erosion or dust control consists of applying water or other dust palliatives as necessary to prevent or alleviate dust nuisance generated by construction activities. Covering small stockpiles or areas is an alternative to applying water or other dust palliatives.

Suitable Applications

Wind erosion control BMPs are suitable during the following construction activities:

- Construction vehicle traffic on unpaved roads
- Drilling and blasting activities
- Sediment tracking onto paved roads
- Soils and debris storage piles
- Batch drop from front-end loaders
- Areas with unstabilized soil
- Final grading/site stabilization

Limitations

- Watering prevents dust only for a short period and should be applied daily (or more often) to be effective.
- Over watering may cause erosion.

- Oil or oil-treated subgrade should not be used for dust control because the oil may migrate into drainageways and/or seep into the soil.
- Effectiveness depends on soil, temperature, humidity, and wind velocity.
- Chemically treated sub grades may make the soil water repellant, interfering with long-term infiltration and the vegetation/re-vegetation of the site. Some chemical dust suppressants may be subject to freezing and may contain solvents and should be handled properly.
- Asphalt, as a mulch tack or chemical mulch, requires a 24-hour curing time to avoid adherence to equipment, worker shoes, etc. Application should be limited because asphalt surfacing may eventually migrate into the drainage system.
- In compacted areas, watering and other liquid dust control measures may wash sediment or other constituents into the drainage system.

Implementation

General

California's Mediterranean climate, with short wet seasons and long hot dry seasons, allows the soils to thoroughly dry out. During these dry seasons, construction activities are at their peak, and disturbed and exposed areas are increasingly subject to wind erosion, sediment tracking and dust generated by construction equipment.

Dust control, as a BMP, is a practice that is already in place for many construction activities. Los Angeles, the North Coast, and Sacramento, among others, have enacted dust control ordinances for construction activities that cause dust to be transported beyond the construction project property line.

Recently, the State Air Resources Control Board has, under the authority of the Clean Air Act, started to address air quality in relation to inhalable particulate matter less than 10 microns (PM-10). Approximately 90 percent of these small particles are considered to be dust. Existing dust control regulations by local agencies, municipal departments, public works department, and public health departments are in place in some regions within California.

Many local agencies require dust control in order to comply with local nuisance laws, opacity laws (visibility impairment) and the requirements of the Clean Air Act. The following are measures that local agencies may have already implemented as requirements for dust control from contractors:

- Construction and Grading Permits: Require provisions for dust control plans.
- Opacity Emission Limits: Enforce compliance with California air pollution control laws.
- Increase Overall Enforcement Activities: Priority given to cases involving citizen complaints.
- Maintain Field Application Records: Require records of dust control measures from contractor;
- Stormwater Pollution Prevention Plan: (SWPPP): Integrate dust control measures into SWPPP.

Dust Control Practices

Dust control BMPs generally stabilize exposed surfaces and minimize activities that suspend or track dust particles. The following table shows dust control practices that can be applied to site conditions that cause dust. For heavily traveled and disturbed areas, wet suppression (watering), chemical dust suppression, gravel asphalt surfacing, temporary gravel construction entrances, equipment wash-out areas, and haul truck covers can be employed as dust control applications. Permanent or temporary vegetation and mulching can be employed for areas of occasional or no construction traffic. Preventive measures would include minimizing surface areas to be disturbed, limiting onsite vehicle traffic to 15 mph, and controlling the number and activity of vehicles on a site at any given time.

SITE CONDITION	DUST CONTROL PRACTICES								
	Permanent Vegetation	Mulching	Wet Suppression (Watering)	Chemical Dust Suppression	Gravel or Asphalt	Silt Fences	Temporary Gravel Construction Entrances/Equipment Wash Down	Haul Truck Covers	Minimize Extent of Disturbed Area
Disturbed Areas not Subject to Traffic	X	X	X	X	X				X
Disturbed Areas Subject to Traffic			X	X	X		X		X
Material Stock Pile Stabilization			X	X		X			X
Demolition			X				X	X	
Clearing/ Excavation			X	X		X			X
Truck Traffic on Unpaved Roads			X	X	X		X	X	
Mud/Dirt Carry Out					X		X		

Additional preventive measures include:

- Schedule construction activities to minimize exposed area (EC-1, Scheduling).
- Quickly stabilize exposed soils using vegetation, mulching, spray-on adhesives, calcium chloride, sprinkling, and stone/gravel layering.
- Identify and stabilize key access points prior to commencement of construction.
- Minimize the impact of dust by anticipating the direction of prevailing winds.
- Direct most construction traffic to stabilized roadways within the project site.
- Water should be applied by means of pressure-type distributors or pipelines equipped with a spray system or hoses and nozzles that will ensure even distribution.
- All distribution equipment should be equipped with a positive means of shutoff.
- Unless water is applied by means of pipelines, at least one mobile unit should be available at all times to apply water or dust palliative to the project.

- If reclaimed waste water is used, the sources and discharge must meet California Department of Health Services water reclamation criteria and the Regional Water Quality Control Board requirements. Non-potable water should not be conveyed in tanks or drain pipes that will be used to convey potable water and there should be no connection between potable and non-potable supplies. Non-potable tanks, pipes, and other conveyances should be marked, "NON-POTABLE WATER - DO NOT DRINK."

- Materials applied as temporary soil stabilizers and soil binders also generally provide wind erosion control benefits.

- Pave or chemically stabilize access points where unpaved traffic surfaces adjoin paved roads.

- Provide covers for haul trucks transporting materials that contribute to dust.

- Provide for wet suppression or chemical stabilization of exposed soils.

- Provide for rapid clean up of sediments deposited on paved roads. Furnish stabilized construction road entrances and vehicle wash down areas.

- Stabilize inactive construction sites using vegetation or chemical stabilization methods.

- Limit the amount of areas disturbed by clearing and earth moving operations by scheduling these activities in phases.

For chemical stabilization, there are many products available for chemically stabilizing gravel roadways and stockpiles. If chemical stabilization is used, the chemicals should not create any adverse effects on stormwater, plant life, or groundwater.

Costs

Installation costs for water and chemical dust suppression are low, but annual costs may be quite high since these measures are effective for only a few hours to a few days.

Inspection and Maintenance

- Inspect and verify that activity-based BMPs are in place prior to the commencement of associated activities. While activities associated with the BMP are under way, inspect weekly during the rainy season and at two-week intervals in the non-rainy season to verify continued BMP implementation.

- Check areas protected to ensure coverage.

- Most dust control measures require frequent, often daily, or multiple times per day attention.

References

Best Management Practices and Erosion Control Manual for Construction Sites, Flood Control District of Maricopa County, Arizona, September 1992.

California Air Pollution Control Laws, California Air Resources Board, 1992.

Caltrans, Standard Specifications, Sections 10, “Dust Control”; Section 17, “Watering”; and Section 18, “Dust Palliative”.

Prospects for Attaining the State Ambient Air Quality Standards for Suspended Particulate Matter (PM10), Visibility Reducing Particles, Sulfates, Lead, and Hydrogen Sulfide, California Air Resources Board, April 1991.

Stormwater Quality Handbooks Construction Site Best Management Practices (BMPs) Manual, State of California Department of Transportation (Caltrans), November 2000.

Stabilized Construction Entrance / Exit TC-1

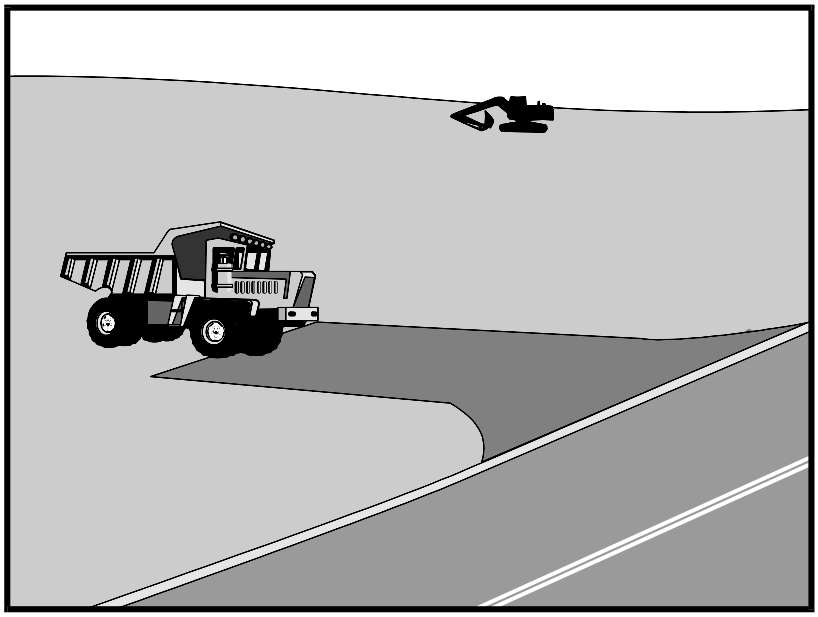

Objectives

EC	Erosion Control	☒
SE	Sediment Control	☒
TC	Tracking Control	☑
WE	Wind Erosion Control	
NS	Non-Stormwater Management Control	
WM	Waste Management and Materials Pollution Control	

Legend:

☑ **Primary Objective**

☒ **Secondary Objective**

Targeted Constituents

Sediment	☑
Nutrients	
Trash	
Metals	
Bacteria	
Oil and Grease	
Organics	

Potential Alternatives

None

Description and Purpose

A stabilized construction access is defined by a point of entrance/exit to a construction site that is stabilized to reduce the tracking of mud and dirt onto public roads by construction vehicles.

Suitable Applications

Use at construction sites:

- Where dirt or mud can be tracked onto public roads.
- Adjacent to water bodies.
- Where poor soils are encountered.
- Where dust is a problem during dry weather conditions.

Limitations

- Entrances and exits require periodic top dressing with additional stones.
- This BMP should be used in conjunction with street sweeping on adjacent public right of way.
- Entrances and exits should be constructed on level ground only.
- Stabilized construction entrances are rather expensive to construct and when a wash rack is included, a sediment trap of some kind must also be provided to collect wash water runoff.

Implementation

General

A stabilized construction entrance is a pad of aggregate underlain with filter cloth located at any point where traffic will be entering or leaving a construction site to or from a public right of way, street, alley, sidewalk, or parking area. The purpose of a stabilized construction entrance is to reduce or eliminate the tracking of sediment onto public rights of way or streets. Reducing tracking of sediments and other pollutants onto paved roads helps prevent deposition of sediments into local storm drains and production of airborne dust.

Where traffic will be entering or leaving the construction site, a stabilized construction entrance should be used. NPDES permits require that appropriate measures be implemented to prevent tracking of sediments onto paved roadways, where a significant source of sediments is derived from mud and dirt carried out from unpaved roads and construction sites.

Stabilized construction entrances are moderately effective in removing sediment from equipment leaving a construction site. The entrance should be built on level ground. Advantages of the Stabilized Construction Entrance/Exit is that it does remove some sediment from equipment and serves to channel construction traffic in and out of the site at specified locations. Efficiency is greatly increased when a washing rack is included as part of a stabilized construction entrance/exit.

Design and Layout

- Construct on level ground where possible.
- Select 3 to 6 in. diameter stones.
- Use minimum depth of stones of 12 in. or as recommended by soils engineer.
- Construct length of 50 ft minimum, and 30 ft minimum width.
- Rumble racks constructed of steel panels with ridges and installed in the stabilized entrance/exit will help remove additional sediment and to keep adjacent streets clean.
- Provide ample turning radii as part of the entrance.
- Limit the points of entrance/exit to the construction site.
- Limit speed of vehicles to control dust.
- Properly grade each construction entrance/exit to prevent runoff from leaving the construction site.
- Route runoff from stabilized entrances/exits through a sediment trapping device before discharge.
- Design stabilized entrance/exit to support heaviest vehicles and equipment that will use it.
- Select construction access stabilization (aggregate, asphaltic concrete, concrete) based on longevity, required performance, and site conditions. Do not use asphalt concrete (AC) grindings for stabilized construction access/roadway.

- If aggregate is selected, place crushed aggregate over geotextile fabric to at least 12 in. depth, or place aggregate to a depth recommended by a geotechnical engineer. A crushed aggregate greater than 3 in. but smaller than 6 in. should be used.
- Designate combination or single purpose entrances and exits to the construction site.
- Require that all employees, subcontractors, and suppliers utilize the stabilized construction access.
- Implement SE-7, Street Sweeping and Vacuuming, as needed.
- All exit locations intended to be used for more than a two-week period should have stabilized construction entrance/exit BMPs.

Inspection and Maintenance

- Inspect and verify that activity–based BMPs are in place prior to the commencement of associated activities. While activities associated with the BMPs are under way, inspect weekly during the rainy season and of two-week intervals in the non-rainy season to verify continued BMP implementation.
- Inspect local roads adjacent to the site daily. Sweep or vacuum to remove visible accumulated sediment.
- Remove aggregate, separate and dispose of sediment if construction entrance/exit is clogged with sediment.
- Keep all temporary roadway ditches clear.
- Check for damage and repair as needed.
- Replace gravel material when surface voids are visible.
- Remove all sediment deposited on paved roadways within 24 hours.
- Remove gravel and filter fabric at completion of construction

Costs

Average annual cost for installation and maintenance may vary from $1,200 to $4,800 each, averaging $2,400 per entrance. Costs will increase with addition of washing rack, and sediment trap. With wash rack, costs range from $1,200 - $6,000 each, averaging $3,600 per entrance.

References

Manual of Standards of Erosion and Sediment Control Measures, Association of Bay Area Governments, May 1995.

National Management Measures to Control Nonpoint Source Pollution from Urban Areas, USEPA Agency, 2002.

Proposed Guidance Specifying Management Measures for Sources of Nonpoint Pollution in Coastal Waters, Work Group Working Paper, USEPA, April 1992.

Stormwater Quality Handbooks Construction Site Best Management Practices (BMPs) Manual, State of California Department of Transportation (Caltrans), November 2000.

Stormwater Management of the Puget Sound Basin, Technical Manual, Publication #91-75, Washington State Department of Ecology, February 1992.

Virginia Erosion and Sedimentation Control Handbook, Virginia Department of Conservation and Recreation, Division of Soil and Water Conservation, 1991.

Guidance Specifying Management Measures for Nonpoint Pollution in Coastal Waters, EPA 840-B-9-002, USEPA, Office of Water, Washington, DC, 1993.

Water Quality Management Plan for the Lake Tahoe Region, Volume II, Handbook of Management Practices, Tahoe Regional Planning Agency, November 1988.

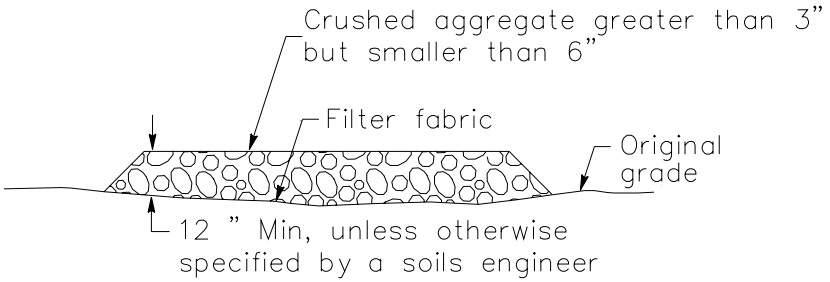

SECTION B–B
NTS

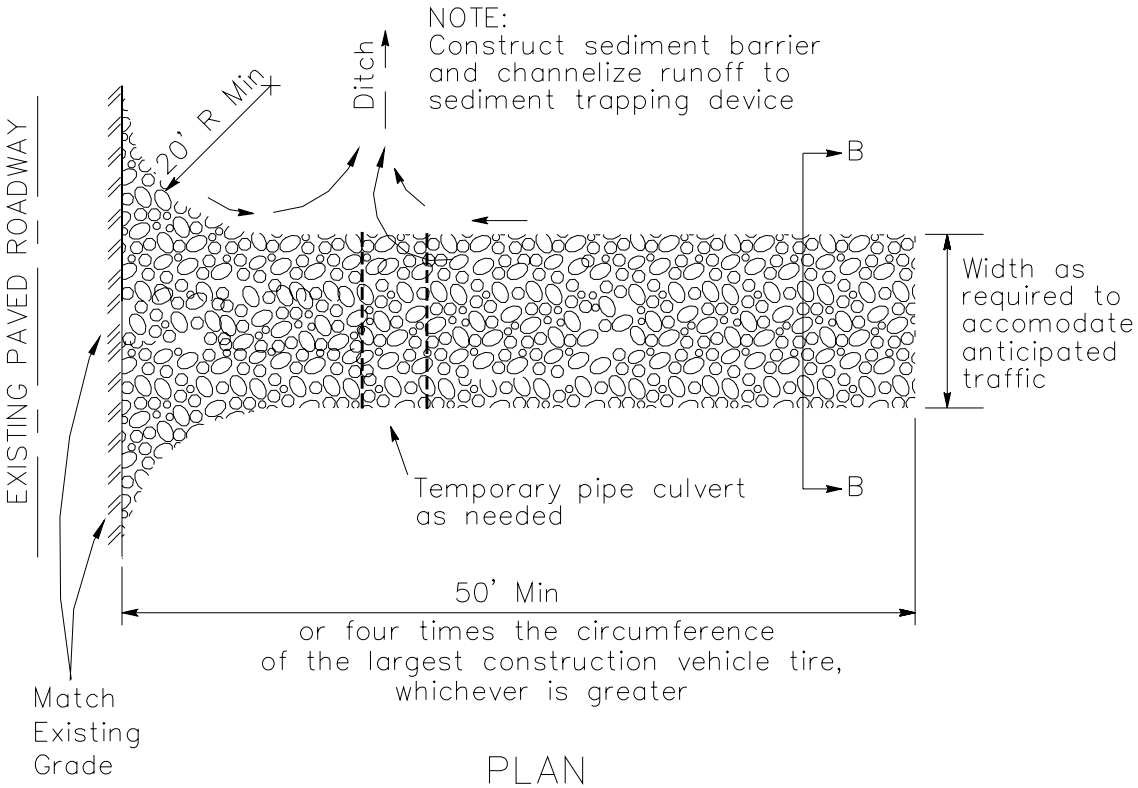

PLAN
NTS

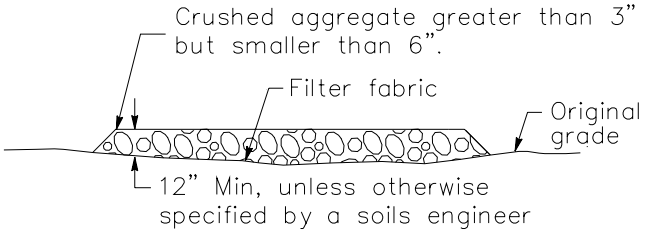

SECTION B–B
NTS

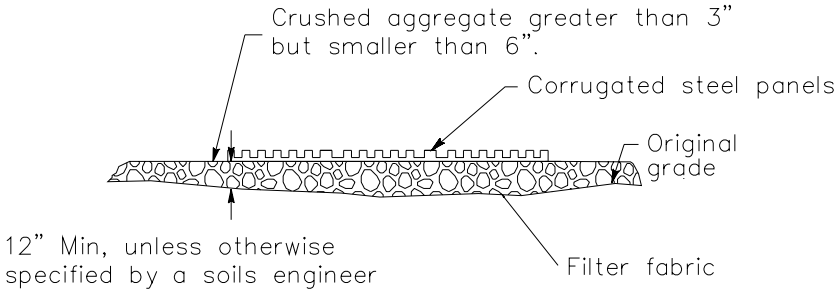

SECTION A–A
NOT TO SCALE

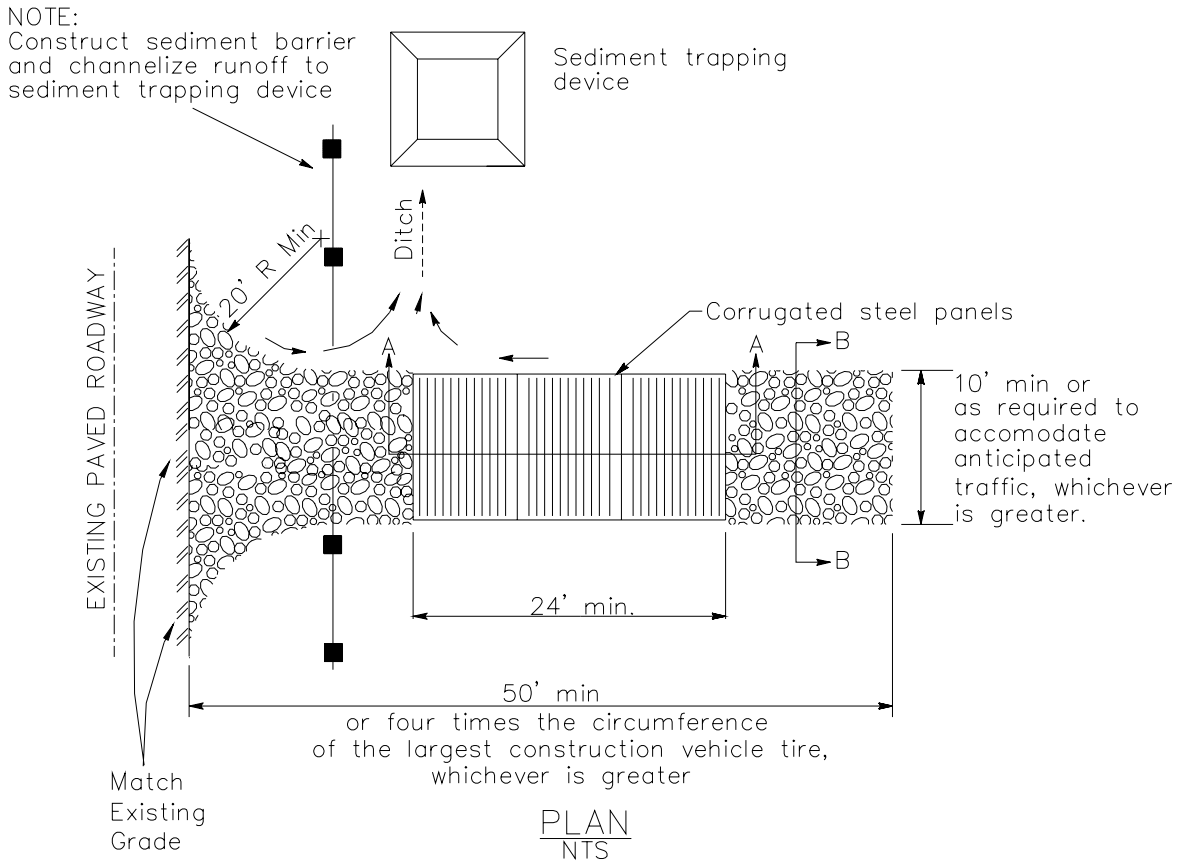

PLAN
NTS

Stabilized Construction Roadway TC-2

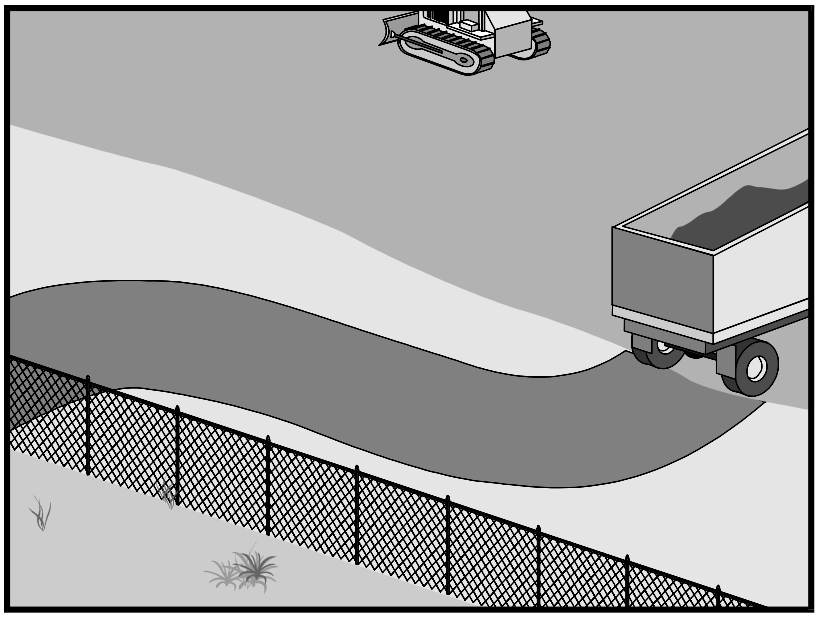

Objectives

EC	Erosion Control	☒
SE	Sediment Control	☒
TC	Tracking Control	☑
WE	Wind Erosion Control	
NS	Non-Stormwater Management Control	
WM	Waste Management and Materials Pollution Control	

Legend:

☑ **Primary Objective**

☒ **Secondary Objective**

Targeted Constituents

Sediment	☑
Nutrients	
Trash	
Metals	
Bacteria	
Oil and Grease	
Organics	

Potential Alternatives

None

Description and Purpose

Access roads, subdivision roads, parking areas, and other onsite vehicle transportation routes should be stabilized immediately after grading, and frequently maintained to prevent erosion and control dust.

Suitable Applications

This BMP should be applied for the following conditions:

- Temporary Construction Traffic:
  - Phased construction projects and offsite road access
  - Construction during wet weather
- Construction roadways and detour roads:
  - Where mud tracking is a problem during wet weather
  - Where dust is a problem during dry weather
  - Adjacent to water bodies
  - Where poor soils are encountered

Limitations

- The roadway must be removed or paved when construction is complete.

- Certain chemical stabilization methods may cause stormwater or soil pollution and should not be used. See WE-1, Wind Erosion Control.
- Management of construction traffic is subject to air quality control measures. Contact the local air quality management agency.
- Materials will likely need to be removed prior to final project grading and stabilization.
- Use of this BMP may not be applicable to very short duration projects.

Implementation

General

Areas that are graded for construction vehicle transport and parking purposes are especially susceptible to erosion and dust. The exposed soil surface is continually disturbed, leaving no opportunity for vegetative stabilization. Such areas also tend to collect and transport runoff waters along their surfaces. During wet weather, they often become muddy quagmires that generate significant quantities of sediment that may pollute nearby streams or be transported offsite on the wheels of construction vehicles. Dirt roads can become so unstable during wet weather that they are virtually unusable.

Efficient construction road stabilization not only reduces onsite erosion but also can significantly speed onsite work, avoid instances of immobilized machinery and delivery vehicles, and generally improve site efficiency and working conditions during adverse weather

Installation/Application Criteria

Permanent roads and parking areas should be paved as soon as possible after grading. As an alternative where construction will be phased, the early application of gravel or chemical stabilization may solve potential erosion and stability problems. Temporary gravel roadway should be considered during the rainy season and on slopes greater than 5%.

Temporary roads should follow the contour of the natural terrain to the maximum extent possible. Slope should not exceed 15%. Roadways should be carefully graded to drain transversely. Provide drainage swales on each side of the roadway in the case of a crowned section or one side in the case of a super elevated section. Simple gravel berms without a trench can also be used.

Installed inlets should be protected to prevent sediment laden water from entering the storm sewer system (SE-10, Storm Drain Inlet Protection). In addition, the following criteria should be considered.

- Road should follow topographic contours to reduce erosion of the roadway.
- The roadway slope should not exceed 15%.
- Chemical stabilizers or water are usually required on gravel or dirt roads to prevent dust (WE-1, Wind Erosion Control).
- Properly grade roadway to prevent runoff from leaving the construction site.
- Design stabilized access to support heaviest vehicles and equipment that will use it.

- Stabilize roadway using aggregate, asphalt concrete, or concrete based on longevity, required performance, and site conditions. The use of cold mix asphalt or asphalt concrete (AC) grindings for stabilized construction roadway is not allowed.
- Coordinate materials with those used for stabilized construction entrance/exit points.
- If aggregate is selected, place crushed aggregate over geotextile fabric to at least 12 in. depth. A crushed aggregate greater than 3 in. but smaller than 6 in. should be used.

Inspection and Maintenance

- Inspect and verify that activity–based BMPs are in place prior to the commencement of associated activities. While activities associated with the BMP are under way, impact weekly during the rainy season and of two-week intervals in the non-rainy season to verify continued BMP implementation.
- Keep all temporary roadway ditches clear.
- When no longer required, remove stabilized construction roadway and re-grade and repair slopes.
- Periodically apply additional aggregate on gravel roads.
- Active dirt construction roads are commonly watered three or more times per day during the dry season.

Costs

Gravel construction roads are moderately expensive, but cost is often balanced by reductions in construction delay. No additional costs for dust control on construction roads should be required above that needed to meet local air quality requirements.

References

Blueprint for a Clean Bay: Best Management Practices to Prevent Stormwater Pollution from Construction Related Activities; Santa Clara Valley Nonpoint Source Pollution Control Program, 1995.

Coastal Nonpoint Pollution Control Program; Program Development and Approval Guidance, Working Group, Working Paper; USEPA, April 1992.

Manual of Standards of Erosion and Sediment Control Measures, Association of Bay Area Governments, May 1995.

Stormwater Quality Handbooks Construction Site Best Management Practices (BMPs) Manual, State of California Department of Transportation (Caltrans), November 2000.

Stormwater Management for Construction Activities, Developing Pollution Prevention Plans and Best Management Practices, EPA 832-R-92005; USEPA, April 1992.

Stormwater Management of the Puget Sound Basin, Technical Manual, Publication #91-75, Washington State Department of Ecology, February 1992.

Virginia Erosion and Sedimentation Control Handbook, Virginia Department of Conservation and Recreation, Division of Soil and Water Conservation, 1991.

Water Quality Management Plan for the Lake Tahoe Region, Volume II, Handbook of Management Practices, Tahoe Regional Planning Agency, November 1988.

Entrance/Outlet Tire Wash TC-3

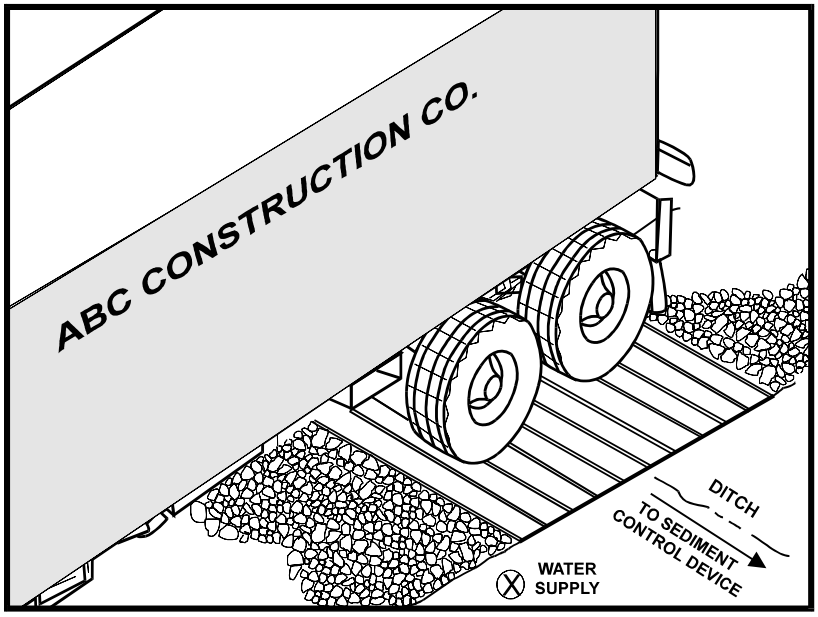

Objectives

EC	Erosion Control	
SE	Sediment Control	☒
TC	Tracking Control	☑
WE	Wind Erosion Control	
NS	Non-Stormwater Management Control	
WM	Waste Management and Materials Pollution Control	

Legend:

☑ **Primary Objective**

☒ **Secondary Objective**

Targeted Constituents

Sediment	☑
Nutrients	
Trash	
Metals	
Bacteria	
Oil and Grease	
Organics	

Potential Alternatives

TC-1 Stabilized Construction Entrance/Exit

Description and Purpose

A tire wash is an area located at stabilized construction access points to remove sediment from tires and under carriages and to prevent sediment from being transported onto public roadways.

Suitable Applications

Tire washes may be used on construction sites where dirt and mud tracking onto public roads by construction vehicles may occur.

Limitations

- The tire wash requires a supply of wash water.
- A turnout or doublewide exit is required to avoid having entering vehicles drive through the wash area.
- Do not use where wet tire trucks leaving the site leave the road dangerously slick.

Implementation

- Incorporate with a stabilized construction entrance/exit. See TC-1, Stabilized Construction Entrance/Exit.
- Construct on level ground when possible, on a pad of coarse aggregate greater than 3 in. but smaller than 6 in. A geotextile fabric should be placed below the aggregate.
- Wash rack should be designed and constructed/manufactured for anticipated traffic loads.

- Provide a drainage ditch that will convey the runoff from the wash area to a sediment trapping device. The drainage ditch should be of sufficient grade, width, and depth to carry the wash runoff.
- Use hoses with automatic shutoff nozzles to prevent hoses from being left on.
- Require that all employees, subcontractors, and others that leave the site with mud caked tires and undercarriages to use the wash facility.
- Implement SC-7, Street Sweeping and Vacuuming, as needed.

Costs

Costs are low for installation of wash rack.

Inspection and Maintenance

- Inspect and verify that activity–based BMPs are in place prior to the commencement of associated activities. While activities associated with the BMP are under way, inspect weekly during the rainy season and of two-week intervals in the non-rainy season to verify continued BMP implementation.
- Inspect BMPs subject to non-stormwater discharge daily while non-stormwater discharges occur.
- Remove accumulated sediment in wash rack and/or sediment trap to maintain system performance.
- Inspect routinely for damage and repair as needed.

References

Blueprint for a Clean Bay: Best Management Practices to Prevent Stormwater Pollution from Construction Related Activities; Santa Clara Valley Nonpoint Source Pollution Control Program, 1995.

Coastal Nonpoint Pollution Control Program; Program Development and Approval Guidance, Working Group, Working Paper; USEPA, April 1992.

Manual of Standards of Erosion and Sediment Control Measures, Association of Bay Area Governments, May 1995.

Stormwater Quality Handbooks Construction Site Best Management Practices (BMPs) Manual, State of California Department of Transportation (Caltrans), November 2000.

Stormwater Management for Construction Activities, Developing Pollution Prevention Plans and Best Management Practices, EPA 832-R-92005; USEPA, April 1992.

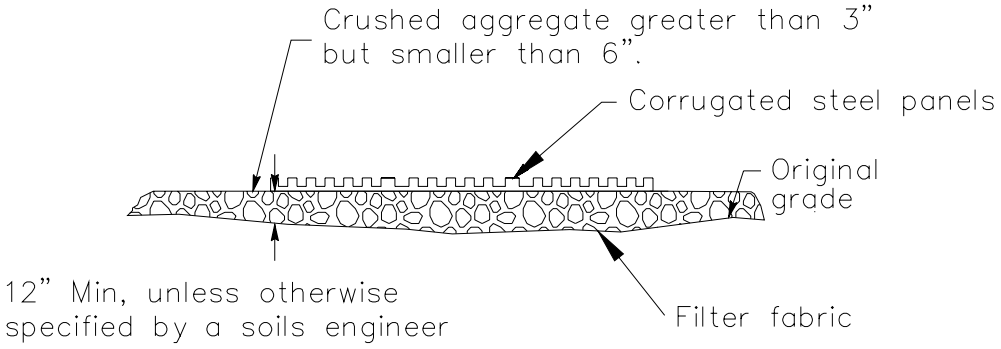

SECTION A–A
NOT TO SCALE

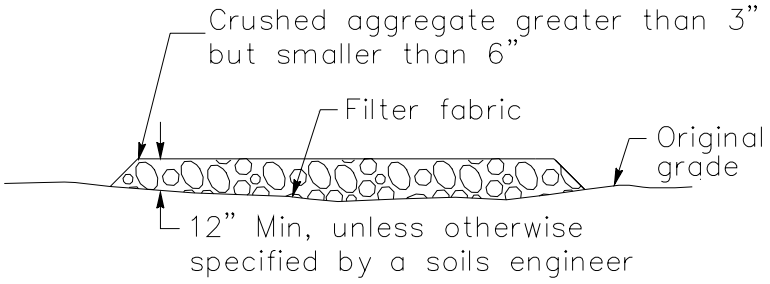

SECTION B–B
NTS

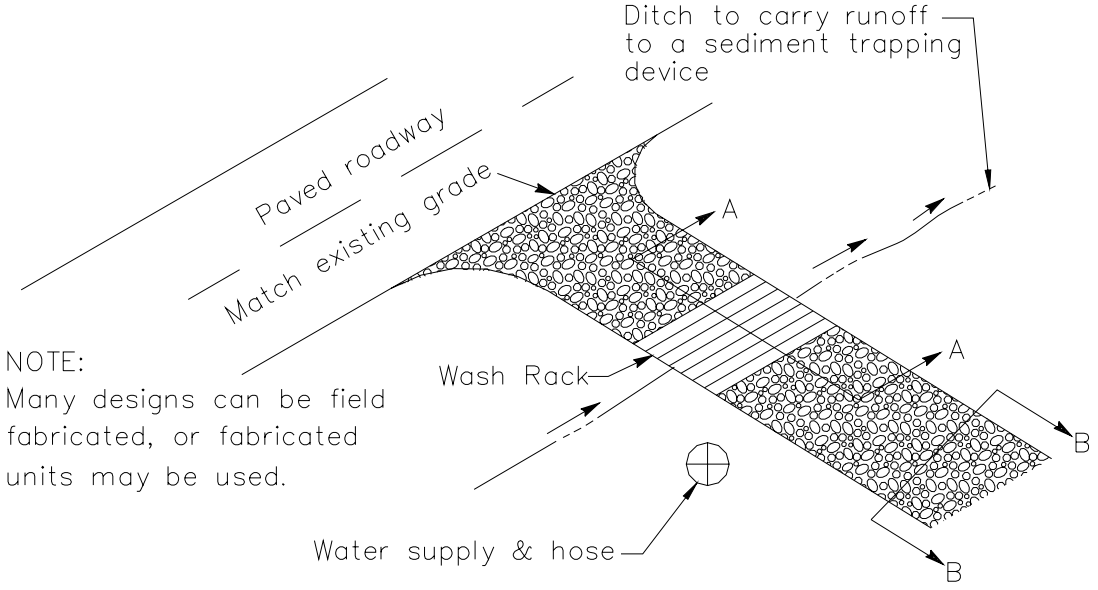

TYPICAL TIRE WASH
NOT TO SCALE

Section 4
Non-Stormwater Management and Material Management BMPs

4.1 Non-Stormwater Management BMPs

The Construction General Permit prohibits the discharge of materials other than stormwater and authorized non-stormwater discharges. It is recognized that certain non-stormwater discharges may be necessary for the completion of construction projects. Such discharges include but are not limited to irrigation of vegetative erosion control measures, pipe flushing and testing, and street cleaning.

Non-stormwater management BMPs are source control BMPs that prevent pollution by limiting or reducing potential pollutants at their source or eliminating off-site discharge. These practices involve day-to-day operations of the construction site and are usually under the control of the contractor. These BMPs are also referred to as "good housekeeping practices" which involve keeping a clean, orderly construction site.

Non-stormwater management BMPs also include procedures and practices designed to minimize or eliminate the discharge of pollutants from vehicle and equipment cleaning, fueling, and maintenance operations to stormwater drainage systems or to watercourses.

Table 4-1 lists the non-stormwater management BMPs. All these BMPs must be implemented depending on the conditions and applicability of deployment described as part of the BMP.

Table 4-1 Non-Stormwater Management BMPs

BMP#	BMP Name
NS-1	Water Conservation Practices
NS-2	Dewatering Operations
NS-3	Paving and Grinding Operations
NS-4	Temporary Stream Crossing
NS-5	Clear Water Diversion
NS-6	Illicit Connection/Discharge
NS-7	Potable Water/Irrigation
NS-8	Vehicle and Equipment Cleaning
NS-9	Vehicle and Equipment Fueling
NS-10	Vehicle and Equipment Maintenance
NS-11	Pile Driving Operations
NS-12	Concrete Curing
NS-13	Concrete Finishing
NS-14	Material and Equipment Use
NS-15	Demolition Adjacent to Water
NS-16	Temporary Batch Plants

It is recommended that owners and contractors be vigilant regarding implementation of these BMPs, including making their implementation a condition of continued employment, and part of all prime and subcontract agreements. By doing so, the chance of inadvertent violation by an uncaring individual can be prevented, potentially saving thousands of dollars in fines and project delays. Also, if procedures are not properly implemented and/or if BMPs are compromised then the discharge is subject to sampling and analysis requirements contained in the General Permit.

4.2 Waste Management & Materials Pollution Control BMPs

Waste management and materials pollution control BMPs, like non-stormwater management BMPs, are source control BMPs that prevent pollution by limiting or reducing potential pollutants at their source before they come in contact with stormwater. These BMPs also involve day-to-day operations of the construction site, are under the control of the contractor, and are additional "good housekeeping practices" which involve keeping a clean, orderly construction site.

Table 4-2 Waste Management & Materials Pollution Control BMPs

BMP#	BMP Name
WM-1	Material Delivery and Storage
WM-2	Material Use
WM-3	Stockpile Management
WM-4	Spill Prevention and Control
WM-5	Solid Waste Management
WM-6	Hazardous Waste Management
WM-7	Contaminated Soil Management
WM-8	Concrete Waste Management
WM-9	Sanitary/ Septic Waste Management
WM-10	Liquid Waste Management

Waste management consists of implementing procedural and structural BMPs for handling, storing, and disposing of wastes generated by a construction project. The objective is to prevent the release of waste materials into stormwater runoff or discharges through proper management of the following types of wastes:

- Solid
- Sanitary
- Concrete
- Hazardous
- Equipment – related wastes

Materials pollution control (also called materials handling) consists of implementing procedural and structural BMPs in the handling, storing, and the use of construction materials. The BMPs are intended to prevent the release of pollutants during stormwater and non-stormwater discharges. The objective is to prevent or reduce the opportunity for contamination of stormwater runoff from construction materials by covering and/or providing secondary containment of storage areas, and by taking adequate precautions when handling materials. These controls must be implemented for all applicable activities, material usage, and site conditions.

Table 4-2 lists the waste management and materials pollution control BMPs. It is important to note that these BMPs should be implemented depending on the conditions/applicability of deployment described as part of the BMP.

4.3 Fact Sheet Format

A BMP fact sheet is a short document that gives all the information about a particular BMP. Typically, each fact sheet contains the information outlined in Figure 4-1. Completed fact sheets for each of the above activities are provided in Section 4.4.

The fact sheets also contain side bar presentations with information on BMP objectives, targeted constituents, removal effectiveness, and potential alternatives.

NS-xx Example Fact Sheet

Description and Purpose

Suitable Applications

Limitations

Implementation

Costs

Inspection and Maintenance

References

Figure 4-1
Example Fact Sheet

4.4 BMP Fact Sheets

BMP Fact Sheets for non-stormwater management and waste management and materials pollution control follow. The BMP fact sheets are individually page numbered and are suitable for photocopying and inclusions in SWPPPs. Fresh copies of the fact sheets can be individually downloaded from the Caltrans Stormwater BMP Handbook website at http://www.cabmphandbooks.com.

Water Conservation Practices NS-1

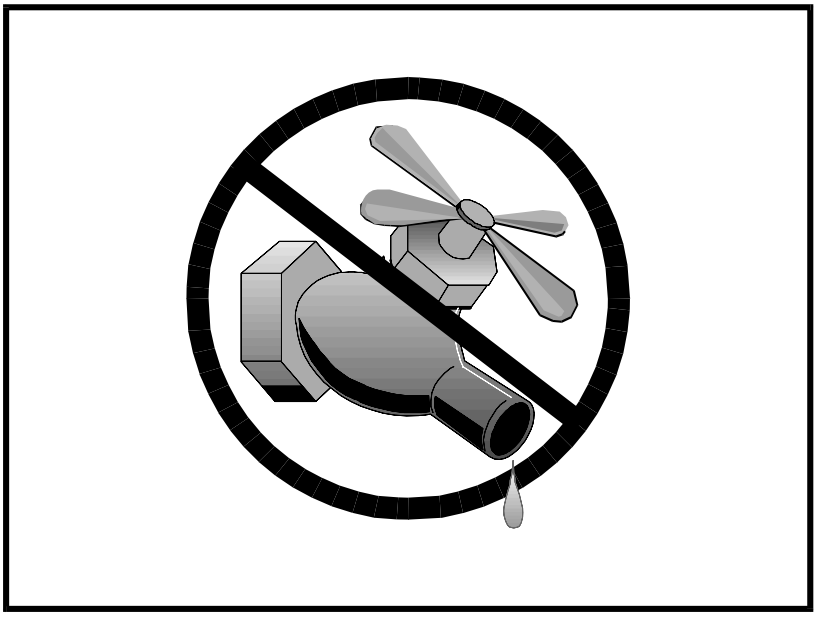

Objectives		
EC	Erosion Control	☒
SE	Sediment Control	☒
TR	Tracking Control	
WE	Wind Erosion Control	
NS	Non-Stormwater Management Control	☑
WM	Waste Management and Materials Pollution Control	

Legend:
☑ Primary Objective
☒ Secondary Objective

Targeted Constituents	
Sediment	☑
Nutrients	
Trash	
Metals	
Bacteria	
Oil and Grease	
Organics	

Potential Alternatives

None

Description and Purpose

Water conservation practices are activities that use water during the construction of a project in a manner that avoids causing erosion and the transport of pollutants offsite. These practices can reduce or eliminate non-stormwater discharges.

Suitable Applications

Water conservation practices are suitable for all construction sites where water is used, including piped water, metered water, trucked water, and water from a reservoir.

Limitations

- None identified.

Implementation

- Keep water equipment in good working condition.
- Stabilize water truck filling area.
- Repair water leaks promptly.
- Washing of vehicles and equipment on the construction site is discouraged.
- Avoid using water to clean construction areas. If water must be used for cleaning or surface preparation, surface should be swept and vacuumed first to remove dirt. This will minimize amount of water required.

- Direct construction water runoff to areas where it can soak into the ground or be collected and reused.
- Authorized non-stormwater discharges to the storm drain system, channels, or receiving waters are acceptable with the implementation of appropriate BMPs.
- Lock water tank valves to prevent unauthorized use.

Costs

The cost is small to none compared to the benefits of conserving water.

Inspection and Maintenance

- Inspect and verify that activity based BMPs are in place prior to the commencement of authorized non-stormwater discharges.
- Inspect BMPs subject to non-stormwater discharges daily while non-stormwater discharges are occuring.
- Repair water equipment as needed to prevent unintended discharges.
  - Water trucks
  - Water reservoirs (water buffalos)
  - Irrigation systems
  - Hydrant connections

References

Stormwater Quality Handbooks - Construction Site Best Management Practices (BMPs) Manual, State of California Department of Transportation (Caltrans), November 2000.

Dewatering Operations NS-2

Objectives

EC	Erosion Control	
SE	Sediment Control	☒
TR	Tracking Control	
WE	Wind Erosion Control	
NS	Non-Stormwater Management Control	☑
WM	Waste Management and Materials Pollution Control	

Legend:

☑ **Primary Objective**

☒ **Secondary Objective**

Description and Purpose

Dewatering operations are practices that manage the discharge of pollutants when non-stormwater and accumulated precipitation must be removed from a work location so that construction work may be accomplished.

Suitable Applications

These practices are implemented for discharges of non-stormwater from construction sites. Non-stormwaters include, but are not limited to, groundwater, water from cofferdams, water diversions, and waters used during construction activities that must be removed from a work area.

Practices identified in this section are also appropriate for implementation when managing the removal of accumulated precipitation (stormwater) from depressed areas at a construction site.

Limitations

- Site conditions will dictate design and use of dewatering operations.
- The controls discussed in this best management practice (BMP) address sediment only.
- The controls detailed in this BMP only allow for minimal settling time for sediment particles. Use only when site conditions restrict the use of the other control methods.
- Dewatering operations will require, and must comply with, applicable local permits.

Targeted Constituents

Sediment	☑
Nutrients	
Trash	
Metals	
Bacteria	
Oil and Grease	☑
Organics	

Potential Alternatives

SE-5: Fiber Roll

SE-6: Gravel Bag Berm

SE-9: Straw Bale Barrier

CASQA
CALIFORNIA STORMWATER QUALITY ASSOCIATION

- Avoid dewatering discharges where possible by using the water for dust control, by infiltration, etc.

Implementation

- Dewatering non-stormwater cannot be discharged without prior notice to and approval from the Regional Water Quality Control Board (RWQCB) and local stormwater management agency. This includes stormwater that is co-mingled with groundwater or other non-stormwater sources. Once the discharge is allowed, appropriate BMPs must be implemented to ensure the discharge complies with all permit requirements and regional and watershed-specific requirements.

- RWQCB may require a separate NPDES permit prior to the dewatering discharge of non-stormwater. These permits will have specific testing, monitoring, and discharge requirements and can take significant time to obtain.

- The flow chart shown in Figure 1 should be utilized to guide dewatering operations.

- The owner will coordinate monitoring and permit compliance.

- Additional permits or permissions from other agencies may be required for dewatering cofferdams or diversions.

- Dewatering discharges must not cause erosion at the discharge point.

A variety of methods can be used to treat water during dewatering operations. Several devices are presented below and provide options to achieve sediment removal. The size of particles present in the sediment and Permit or receiving water limitations on sediment are key considerations for selecting sediment treatment option(s); in some cases, the use of multiple devices may be appropriate.

Sediment Basin (see also SE-2)

Description:

- A sediment basin is a temporary basin with a controlled release structure that is formed by excavation or construction of an embankment to detain sediment-laden runoff and allow sediment to settle out before discharging. Sediment basins are generally larger than Sediment Traps (SE-3).

Appropriate Applications:

- Effective for the removal of gravel, sand, silt, some metals that settle out with the sediment, and trash.

Implementation:

- Excavation and construction of related facilities is required.

- Temporary sediment basins must be fenced if safety is a concern.

- Outlet protection is required to prevent erosion at the outfall location.

Maintenance:

- Maintenance is required for safety fencing, vegetation, embankment, inlet and outfall structures, as well as other features.
- Removal of sediment is required when the storage volume is reduced by one-half.

Sediment Trap (See also SE-3)

Description:

- A sediment trap is a temporary basin formed by excavation and/or construction of an earthen embankment across a waterway or low drainage area to detain sediment-laden runoff and allow sediment to settle out before discharging. Sediment traps are generally smaller than Sediment Basins (SE-2).

Appropriate Applications:

Effective for the removal of large and medium sized particles (sand and gravel) and some metals that settle out with the sediment.

Implementation:

- Excavation and construction of related facilities is required.
- Trap inlets should be located to maximize the travel distance to the trap outlet.
- Use rock or vegetation to protect the trap outlets against erosion.

Maintenance:

- Maintenance is required for vegetation, embankment, inlet and outfall structures, as well as other features.
- Removal of sediment is required when the storage volume is reduced by one-third.

Weir Tanks

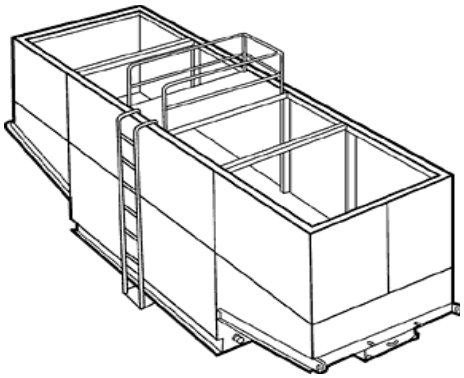

Description:

- A weir tank separates water and waste by using weirs. The configuration of the weirs (over and under weirs) maximizes the residence time in the tank and determines the waste to be removed from the water, such as oil, grease, and sediments.

Appropriate Applications:

- The tank removes trash, some settleable solids (gravel, sand, and silt), some visible oil and grease, and some metals (removed with sediment). To achieve high levels of flow, multiple tanks can be used in parallel. If additional treatment is desired, the tanks can be placed in series or as pre-treatment for other methods.

Implementation:

- Tanks are delivered to the site by the vendor, who can provide assistance with set-up and operation.
- Tank size will depend on flow volume, constituents of concern, and residency period required. Vendors should be consulted to appropriately size tank.

Maintenance:

- Periodic cleaning is required based on visual inspection or reduced flow.
- Oil and grease disposal must be by licensed waste disposal company.

Dewatering Tanks

Description:

- A dewatering tank removes debris and sediment. Flow enters the tank through the top, passes through a fabric filter, and is discharged through the bottom of the tank. The filter separates the solids from the liquids.

Appropriate Applications:

- The tank removes trash, gravel, sand, and silt, some visible oil and grease, and some metals (removed with sediment). To achieve high levels of flow, multiple tanks can be used in parallel. If additional treatment is desired, the tanks can be placed in series or as pre-treatment for other methods.

Implementation:

- Tanks are delivered to the site by the vendor, who can provide assistance with set-up and operation.
- Tank size will depend on flow volume, constituents of concern, and residency period required. Vendors should be consulted to appropriately size tank.

Maintenance:

- Periodic cleaning is required based on visual inspection or reduced flow.
- Oil and grease disposal must be by licensed waste disposal company.

Gravity Bag Filter

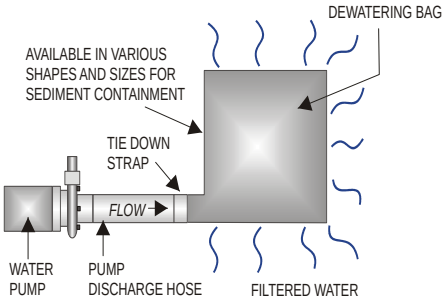

Description:

- A gravity bag filter, also referred to as a dewatering bag, is a square or rectangular bag made of non-woven geotextile fabric that collects sand, silt, and fines.

Appropriate Applications:

- Effective for the removal of sediments (gravel, sand, and silt). Some metals are removed with the sediment.

Implementation:

- Water is pumped into one side of the bag and seeps through the bottom and sides of the bag.
- A secondary barrier, such as a rock filter bed or straw/hay bale barrier, is placed beneath and beyond the edges of the bag to capture sediments that escape the bag.

Maintenance:

- Inspection of the flow conditions, bag condition, bag capacity, and the secondary barrier is required.
- Replace the bag when it no longer filters sediment or passes water at a reasonable rate.
- The bag is disposed of offsite.

Sand Media Particulate Filter

Description:

- Water is treated by passing it through canisters filled with sand media. Generally, sand filters provide a final level of treatment. They are often used as a secondary or higher level of treatment after a significant amount of sediment and other pollutants have been removed using other methods.

Appropriate Applications:

- Effective for the removal of trash, gravel, sand, and silt and some metals, as well as the reduction of biochemical oxygen demand (BOD) and turbidity.
- Sand filters can be used for stand-alone treatment or in conjunction with bag and cartridge filtration if further treatment is required.
- Sand filters can also be used to provide additional treatment to water treated via settling or basic filtration.

Implementation:

- The filters require delivery to the site and initial set up. The vendor can provide assistance with installation and operation.

Maintenance:

- The filters require regular service to monitor and maintain the level of the sand media. If subjected to high loading rates, filters can plug quickly.
- Venders generally provide data on maximum head loss through the filter. The filter should be monitored daily while in use, and cleaned when head loss reaches target levels.
- If cleaned by backwashing, the backwash water may need to be hauled away for disposal, or returned to the upper end of the treatment train for another pass through the series of dewatering BMPs.

Pressurized Bag Filter

Description:

- A pressurized bag filter is a unit composed of single filter bags made from polyester felt material. The water filters through the unit and is discharged through a header. Vendors provide bag filters in a variety of configurations. Some units include a combination of bag filters and cartridge filters for enhanced contaminant removal.

Appropriate Applications:

- Effective for the removal of sediment (sand and silt) and some metals, as well as the reduction of BOD, turbidity, and hydrocarbons. Oil absorbent bags are available for hydrocarbon removal.

- Filters can be used to provide secondary treatment to water treated via settling or basic filtration.

Implementation:

- The filters require delivery to the site and initial set up. The vendor can provide assistance with installation and operation.

Maintenance:

- The filter bags require replacement when the pressure differential equals or exceeds the manufacturer's recommendation.

Cartridge Filter

Description:

- Cartridge filters provide a high degree of pollutant removal by utilizing a number of individual cartridges as part of a larger filtering unit. They are often used as a secondary or higher (polishing) level of treatment after a significant amount of sediment and other pollutants are removed. Units come with various cartridge configurations (for use in series with bag filters) or with a larger single cartridge filtration unit (with multiple filters within).

Appropriate Applications:

- Effective for the removal of sediment (sand, silt, and some clays) and metals, as well as the reduction of BOD, turbidity, and hydrocarbons. Hydrocarbons can effectively be removed with special resin cartridges.

- Filters can be used to provide secondary treatment to water treated via settling or basic filtration.

Implementation:

- The filters require delivery to the site and initial set up. The vendor can provide assistance.

Maintenance:

- The cartridges require replacement when the pressure differential equals or exceeds the manufacturer's recommendation.

Costs

- Sediment controls are low to high cost measures depending on the dewatering system that is selected. Pressurized filters tend to be more expensive than gravity settling, but are often more effective. Simple tanks are generally rented on a long-term basis (one or more months) and can range from $360 per month for a 1,000 gallon tank to $2,660 per month for a 10,000 gallon tank. Mobilization and demobilization costs vary considerably.

Inspection and Maintenance

- Inspect and verify that activity-based BMPs are in place prior to the commencement of associated activities. While activities associated with the BMP are under way, inspect weekly during the rainy season and at two-week intervals in the non-rainy season to verify continued BMP implementation.

- Inspect BMPs subject to non-stormwater discharges daily while non-stormwater discharges occur.
- Unit-specific maintenance requirements are included with the description of each unit.
- Sediment removed during the maintenance of a dewatering device may be either spread onsite and stabilized, or disposed of at a disposal site as approved by the owner.
- Sediment that is commingled with other pollutants must be disposed of in accordance with all applicable laws and regulations and as approved by the owner.

References

Blueprint for a Clean Bay: Best Management Practices to Prevent Stormwater Pollution from Construction Related Activities; Santa Clara Valley Nonpoint Source Pollution Control Program, 1995.

Stormwater Quality Handbooks - Construction Site Best Management Practices (BMPs) Manual, State of California Department of Transportation (Caltrans), November 2000.

Stormwater Management for Construction Activities, Developing Pollution Prevention Plans and Best Management Practices, EPA 832-R-92005; USEPA, April 1992.

Labor Surcharge & Equipment Rental Rates, April 1, 2002 through March 31, 2003, California Department of Transportation (Caltrans).

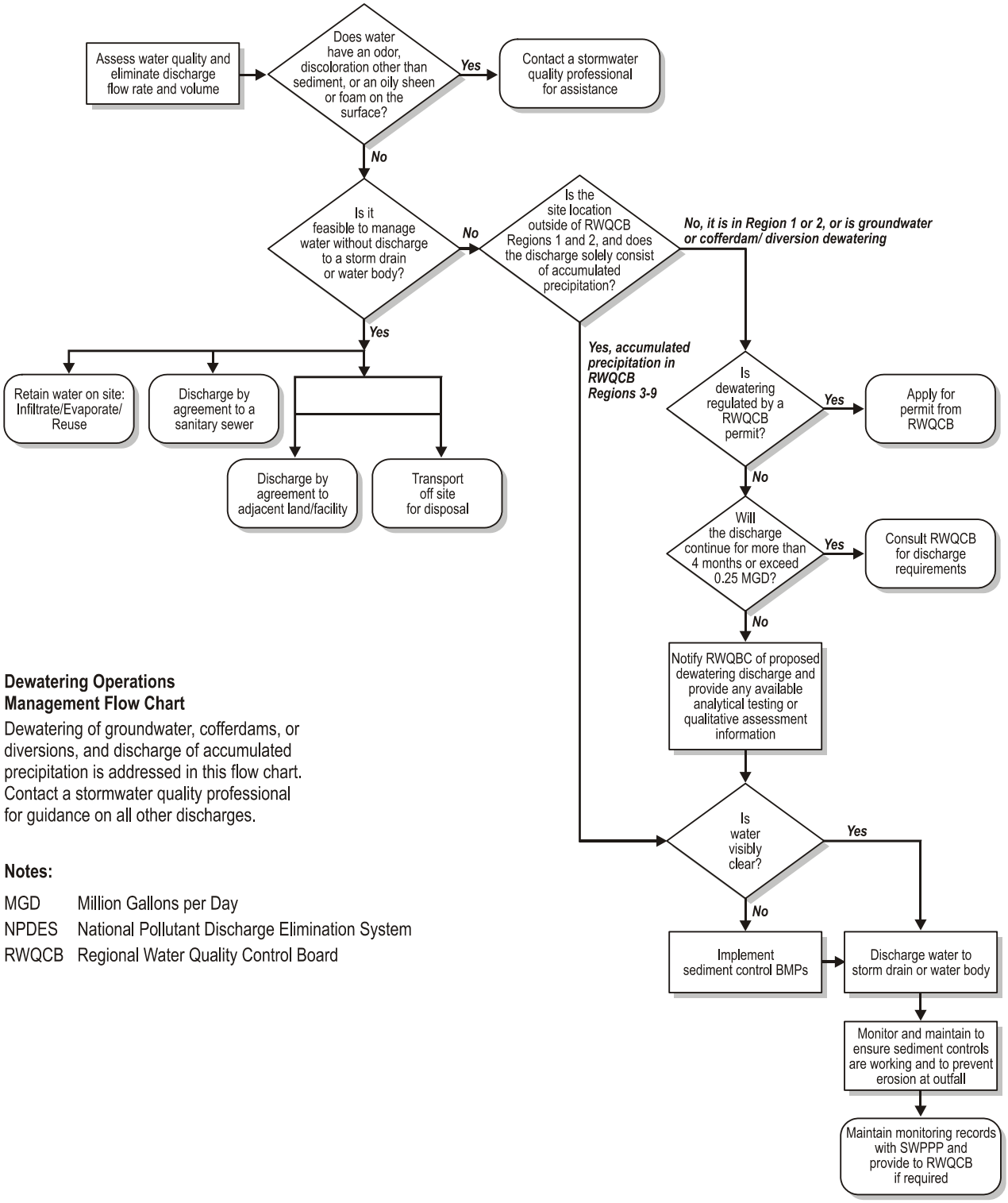

Dewatering Operations Management Flow Chart

Dewatering of groundwater, cofferdams, or diversions, and discharge of accumulated precipitation is addressed in this flow chart. Contact a stormwater quality professional for guidance on all other discharges.

Notes:

MGD Million Gallons per Day
NPDES National Pollutant Discharge Elimination System
RWQCB Regional Water Quality Control Board

Figure 1
Operations Flow Chart

Paving and Grinding Operations NS-3

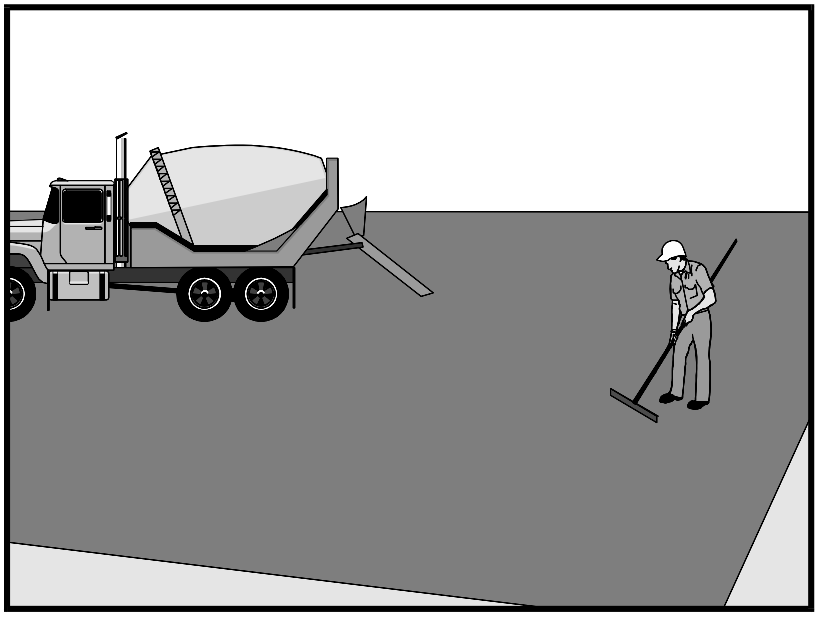

Objectives		
EC	Erosion Control	
SE	Sediment Control	
TR	Tracking Control	
WE	Wind Erosion Control	
NS	Non-Stormwater Management Control	☑
WM	Waste Management and Materials Pollution Control	☒

Legend:

☑ **Primary Objective**

☒ **Secondary Objective**

Targeted Constituents	
Sediment	☑
Nutrients	
Trash	
Metals	
Bacteria	
Oil and Grease	☑
Organics	

Potential Alternatives

None

Description and Purpose

Prevent or reduce the discharge of pollutants from paving operations, using measures to prevent runon and runoff pollution, properly disposing of wastes, and training employees and subcontractors.

Suitable Applications

These procedures are implemented where paving, surfacing, resurfacing, or sawcutting, may pollute stormwater runoff or discharge to the storm drain system or watercourses.

Limitations

- Finer solids are not effectively removed by filtration systems.
- Paving opportunities may be limited during wet weather.

Implementation

General

- Avoid paving during the wet season when feasible.
- Reschedule paving and grinding activities if rain is in the forecast.
- Train employees and sub-contractors in pollution prevention and reduction.
- Store materials away from drainage courses to prevent stormwater runon (see WM-1, Material Delivery and Storage).

- Protect drainage courses, particularly in areas with a grade, by employing BMPs to divert runoff or to trap and filter sediment.
- If paving involves an onsite mixing plant, follow the stormwater permitting requirements for industrial activities.
- Stockpile material removed from roadways away from drain inlets, drainage ditches, and watercourses, These materials should be stored consistent with WM-3, Stockpile Management.
- Disposal of PCC and AC waste should be in conformance with WM-8, Concrete Waste Management.

Saw Cutting, Grinding, and Pavement Removal

- Shovel or vacuum saw-cut slurry and remove from site. Cover or barricade storm drains during saw cutting to contain slurry.
- When paving involves AC, the following steps should be implemented to prevent the discharge of grinding residue, uncompacted or loose AC, tack coats, equipment cleaners, or unrelated paving materials:
  - AC grindings, pieces, or chunks used in embankments or shoulder backing must not be allowed to enter any storm drains or watercourses. Install silt fence until structure is stabilized or permanent controls are in place. Examples of temporary perimeter controls can be found in EC-9, Earth Dikes and Drainage Swales; SE-1, Silt Fence; or SE-5, Fiber Rolls.
  - Collect and remove all broken asphalt and recycle when practical. Old or spilled asphalt must be recycled or disposed.
  - Any AC chunks and pieces used in embankments must be placed above the water table and covered by at least 1 ft of material.
- Do not allow saw-cut slurry to enter storm drains or watercourses. Residue from grinding operations should be picked up by means of a vacuum attachment to the grinding machine, should not be allowed to flow across the pavement, and should not be left on the surface of the pavement. See also WM-8, Concrete Waste Management, and WM-10, Liquid Waste Management.
- Dig out activities should not be conducted in the rain.
- Collect dig out material by mechanical or manual methods. This material may be recycled for use as shoulder backing or base material.
- If dig out material cannot be recycled, transport the material back to an approved storage site.

Asphaltic Concrete Paving

- If paving involves asphaltic cement concrete, follow these steps:

- Do not allow sand or gravel placed over new asphalt to wash into storm drains, streets, or creeks. Vacuum or sweep loose sand and gravel and properly dispose of this waste by referring to WM-5, Solid Waste Management.

- Old asphalt must be disposed of properly. Collect and remove all broken asphalt from the site and recycle whenever possible.

Portland Cement Concrete Paving

- Do not wash sweepings from exposed aggregate concrete into a storm drain system. Collect and return to aggregate base stockpile or dispose of properly.

- Allow aggregate rinse to settle. Then, either allow rinse water to dry in a temporary pit as described in WM-8, Concrete Waste Management, or pump the water to the sanitary sewer if allowed by the local wastewater authority.

Sealing Operations

- During chip seal application and sweeping operations, petroleum or petroleum covered aggregate must not be allowed to enter any storm drain or water courses. Apply temporary perimeter controls until structure is stabilized.

- Drainage inlet structures and manholes should be covered with filter fabric during application of seal coat, tack coat, slurry seal, and fog seal.

- Seal coat, tack coat, slurry seal, or fog seal should not be applied if rainfall is predicted to occur during the application or curing period.

Paving Equipment

- Leaks and spills from paving equipment can contain toxic levels of heavy metals and oil and grease. Place drip pans or absorbent materials under paving equipment when not in use. Clean up spills with absorbent materials rather than burying. See NS-10, Vehicle and Equipment Maintenance, WM-4, Spill Prevention and Control, and WM-10, Liquid Waste Management.

- Substances used to coat asphalt transport trucks, and asphalt spreading equipment should not contain soap and should be non-foaming and non-toxic.

- Use only non-toxic substances to coat asphalt transport trucks and asphalt spreading equipment.

- Paving equipment parked onsite should be parked over plastic to prevent soil contamination.

- Clean asphalt coated equipment offsite whenever possible. When cleaning dry, hardened asphalt from equipment, manage hardened asphalt debris as described in WM-5, Solid Waste Management. Any cleaning onsite should follow NS-8, Vehicle and Equipment Cleaning.

Thermoplastic Striping

- Thermoplastic striper and pre-heater equipment shutoff valves should be inspected to ensure that they are working properly to prevent leaking thermoplastic from entering drain inlets, the stormwater drainage system, or watercourses.
- Pre-heaters should be filled carefully to prevent splashing or spilling of hot thermoplastic. Leave six inches of space at the top of the pre-heater container when filling thermoplastic to allow room for material to move when the vehicle is deadheaded.
- Do not pre-heat, transfer, or load thermoplastic near drain inlets or watercourses.
- Clean truck beds daily of loose debris and melted thermoplastic. When possible, recycle thermoplastic material.

Raised/Recessed Pavement Marker Application and Removal

- Do not transfer or load bituminous material near drain inlets, the stormwater drainage system, or watercourses.
- Melting tanks should be loaded with care and not filled to beyond six inches from the top to leave room for splashing when vehicle is deadheaded.
- When servicing or filling melting tanks, ensure all pressure is released before removing lids to avoid spills.
- On large-scale projects, use mechanical or manual methods to collect excess bituminous material from the roadway after removal of markers.

Costs

- All of the above are low cost measures.

Inspection and Maintenance

- Inspect and verify that activity-based BMPs are in place prior to the commencement of associated activities. While activities associated with the BMP are under way, inspect weekly during the rainy season and at two-week intervals in the non-rainy season to verify continued BMP implementation.
- Keep ample supplies of drip pans or absorbent materials onsite.
- Inspect and maintain machinery regularly to minimize leaks and drips.

References

Blueprint for a Clean Bay: Best Management Practices to Prevent Stormwater Pollution from Construction Related Activities; Santa Clara Valley Nonpoint Source Pollution Control Program, 1995.

Hot Mix Asphalt-Paving Handbook AC 150/5370-14, Appendix I, U.S. Army Corps of Engineers, July 1991.

Stormwater Quality Handbooks - Construction Site Best Management Practices (BMPs) Manual, State of California Department of Transportation (Caltrans), November 2000.

Temporary Stream Crossing NS-4

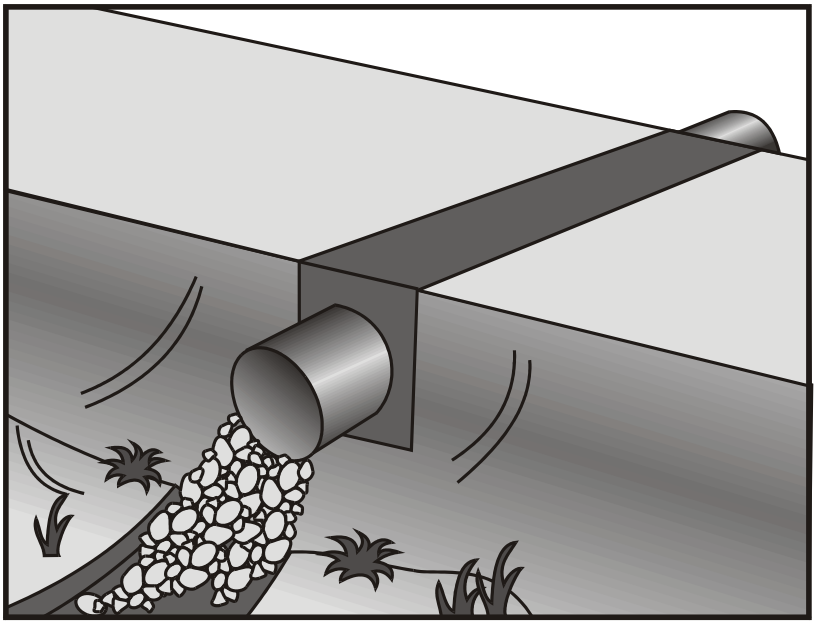

Objectives

EC	Erosion Control	☒
SE	Sediment Control	☒
TR	Tracking Control	☒
WE	Wind Erosion Control	
NS	Non-Stormwater Management Control	☑
WM	Waste Management and Materials Pollution Control	

Legend:

☑ **Primary Objective**

☒ **Secondary Objective**

Targeted Constituents

Sediment	☑
Nutrients	
Trash	
Metals	
Bacteria	
Oil and Grease	
Organics	

Potential Alternatives

None

Description and Purpose

A temporary stream crossing is a temporary culvert, ford or bridge placed across a waterway to provide access for construction purposes for a period of less than one year. Temporary access crossings are not intended to maintain traffic for the public. The temporary access will eliminate erosion and downstream sedimentation caused by vehicles.

Suitable Applications

Temporary stream crossings should be installed at all designated crossings of perennial and intermittent streams on the construction site, as well as for dry channels that may be significantly eroded by construction traffic.

Temporary streams crossings are installed at sites:

- Where appropriate permits have been secured (404 Permits, and 401 Certifications)
- Where construction equipment or vehicles need to frequently cross a waterway
- When alternate access routes impose significant constraints
- When crossing perennial streams or waterways causes significant erosion
- Where construction activities will not last longer than one year

- Where appropriate permits have been obtained for the stream crossing

Limitations

The following limitations may apply:

- Installation and removal will usually disturb the waterway.
- Installation may require Regional Water Quality Control Board (RWQCB) 401 Certification, U.S. Army Corps of Engineers 404 permit and approval by California Department of Fish and Game. If numerical-based water quality standards are mentioned in any of these and other related permits, testing and sampling may be required.
- Installation may require dewatering or temporary diversion of the stream. See NS-2, Dewatering Operations and NS-5, Clear Water Diversion.
- Installation may cause a constriction in the waterway, which can obstruct flood flow and cause flow backups or washouts. If improperly designed, flow backups can increase the pollutant load through washouts and scouring.
- Use of natural or other gravel in the stream for construction of Cellular Confinement System (CCS) ford crossing will be contingent upon approval by fisheries agencies.
- Ford crossings may degrade water quality due to contact with vehicles and equipment.
- May be expensive for a temporary improvement.
- Requires other BMPs to minimize soil disturbance during installation and removal.
- Fords should only be used in dry weather.

Implementation

General

The purpose of this BMP is to provide a safe, erosion-free access across a stream for construction equipment. Minimum standards and specifications for the design, construction, maintenance, and removal of the structure should be established by an engineer registered in California. Temporary stream crossings may be necessary to prevent construction equipment from causing erosion of the stream and tracking sediment and other pollutants into the stream.

Temporary stream crossings are used as access points to construction sites when other detour routes may be too long or burdensome for the construction equipment. Often heavy construction equipment must cross streams or creeks, and detour routes may impose too many constraints such as being too narrow or poor soil strength for the equipment loadings. Additionally, the contractor may find a temporary stream crossing more economical for light–duty vehicles to use for frequent crossings, and may have less environmental impact than construction of a temporary access road.

Location of the temporary stream crossing should address:

- Site selection where erosion potential is low.

- Areas where the side slopes from site runoff will not spill into the side slopes of the crossing.

The following types of temporary stream crossings should be considered:

- **Culverts** – A temporary culvert is effective in controlling erosion but will cause erosion during installation and removal. A temporary culvert can be easily constructed and allows for heavy equipment loads.

- **Fords** - Appropriate during the dry season in arid areas. Used on dry washes and ephemeral streams, and low-flow perennial streams. CCS, a type of ford crossing, is also appropriate for use in streams that would benefit from an influx of gravels. A temporary ford provides little sediment and erosion control and is ineffective in controlling erosion in the stream channel. A temporary ford is the least expensive stream crossing and allows for maximum load limits. It also offers very low maintenance. Fords are more appropriate during the dry ice season and in arid areas of California.

- **Bridges** - Appropriate for streams with high flow velocities, steep gradients and where temporary restrictions in the channel are not allowed.

Design

During the long summer construction season in much of California, rainfall is infrequent and many streams are dry. Under these conditions, a temporary ford may be sufficient. A ford is not appropriate if construction will continue through the winter rainy season, if summer thunderstorms are likely, or if the stream flows during most of the year. Temporary culverts and bridges should then be considered and, if used, should be sized to pass a significant design storm (i.e., at least a 10-year storm). The temporary stream crossing should be protected against erosion, both to prevent excessive sedimentation in the stream and to prevent washout of the crossing.

Design and installation requires knowledge of stream flows and soil strength. Designs should be prepared under direction of, and approved by, a registered civil engineer and for bridges, a registered structural engineer. Both hydraulic and construction loading requirements should be considered with the following:

- Comply with any special requirements for culvert and bridge crossings, particularly if the temporary stream crossing will remain through the rainy season.

- Provide stability in the crossing and adjacent areas to withstand the design flow. The design flow and safety factor should be selected based on careful evaluation of the risks due to over topping, flow backups, or washout.

- Install sediment traps immediately downstream of crossings to capture sediments. See SE-3, Sediment Trap.

- Avoid oil or other potentially hazardous materials for surface treatment.

- Culverts are relatively easy to construct and able to support heavy equipment loads.

- Fords are the least expensive of the crossings, with maximum load limits.

- CCS crossing structures consist of clean, washed gravel and cellular confinement system blocks. CCS are appropriate for streams that would benefit from an influx of gravel; for example, salmonid streams, streams or rivers below reservoirs, and urban, channelized streams. Many urban stream systems are gravel-deprived due to human influences, such as dams, gravel mines, and concrete channels.

- CCS allow designers to use either angular or naturally occurring rounded gravel, because the cells provide the necessary structure and stability. In fact, natural gravel is optimal for this technique, because of the habitat improvement it will provide after removal of the CCS.

- A gravel depth of 6 to 12 in. for a CCS structure is sufficient to support most construction equipment.

- An advantage of a CCS crossing structure is that relatively little rock or gravel is needed, because the CCS provides the stability.

- Bridges are generally more expensive to design and construct, but provide the least disturbance of the streambed and constriction of the waterway flows.

Construction and Use

- Stabilize construction roadways, adjacent work area, and stream bottom against erosion.

- Construct during dry periods to minimize stream disturbance and reduce costs.

- Construct at or near the natural elevation of the streambed to prevent potential flooding upstream of the crossing.

- Install temporary erosion control BMPs in accordance with erosion control BMP fact sheets to minimize erosion of embankment into flow lines.

- Any temporary artificial obstruction placed within flowing water should only be built from material, such as clean gravel or sandbags, that will not introduce sediment or silt into the watercourse.

- Temporary water body crossings and encroachments should be constructed to minimize scour. Cobbles used for temporary water body crossings or encroachments should be clean, rounded river cobble.

- Vehicles and equipment should not be driven, operated, fueled, cleaned, maintained, or stored in the wet or dry portions of a water body where wetland vegetation, riparian vegetation, or aquatic organisms may be destroyed.

- The exterior of vehicles and equipment that will encroach on the water body within the project should be maintained free of grease, oil, fuel, and residues.

- Drip pans should be placed under all vehicles and equipment placed on docks, barges, or other structures over water bodies when the vehicle or equipment is planned to be idle for more than one hour.

- Disturbance or removal of vegetation should not exceed the minimum necessary to complete operations. Precautions should be taken to avoid damage to vegetation by people or equipment. Disturbed vegetation should be replaced with the appropriate soil stabilization measures.

- Riparian vegetation, when removed pursuant to the provisions of the work, should be cut off no lower than ground level to promote rapid re-growth. Access roads and work areas built over riparian vegetation should be covered by a sufficient layer of clean river run cobble to prevent damage to the underlying soil and root structure. The cobble must be removed upon completion of project activities.

- Conceptual temporary stream crossings are shown in the attached figures.

Costs

Caltrans Construction Cost index for temporary bridge crossings is $45-$95/ft^2.

Inspection and Maintenance

- Inspect and verify that activity-based BMPs are in place prior to the commencement of associated activities. While activities associated with the BMP are under way, inspect weekly during the rainy season and at two week intervals in the non-rainy season to verify continued BMP implementation.

- Check for blockage in the channel, sediment buildup or trapped debris in culverts, blockage behind fords or under bridges

- Check for erosion of abutments, channel scour, riprap displacement, or piping in the soil

- Check for structural weakening of the temporary crossings, such as cracks, and undermining of foundations and abutments

- Remove sediment that collects behind fords, in culverts, and under bridges periodically

- Replace lost or displaced aggregate from inlets and outlets of culverts and cellular confinement systems

- Remove temporary crossing promptly when it is no longer needed

References

California Bank and Shore Rock Slope Protection Design – Practitioners Guide and Field Evaluations of Riprap Methods, Caltrans Study No. F90TL03, October 2000.

Stormwater Quality Handbooks - Construction Site Best Management Practices (BMPs) Manual, State of California Department of Transportation (Caltrans), November 2000.

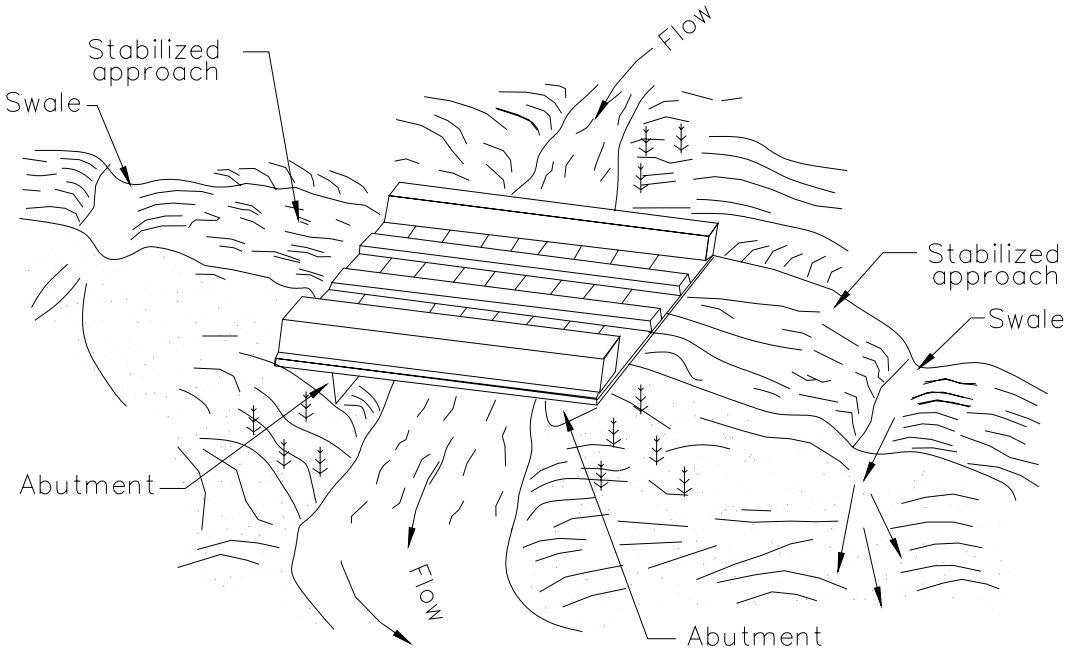

NOTE:
Surface flow of road diverted by swale and/or dike.

TYPICAL BRIDGE CROSSING
NOT TO SCALE

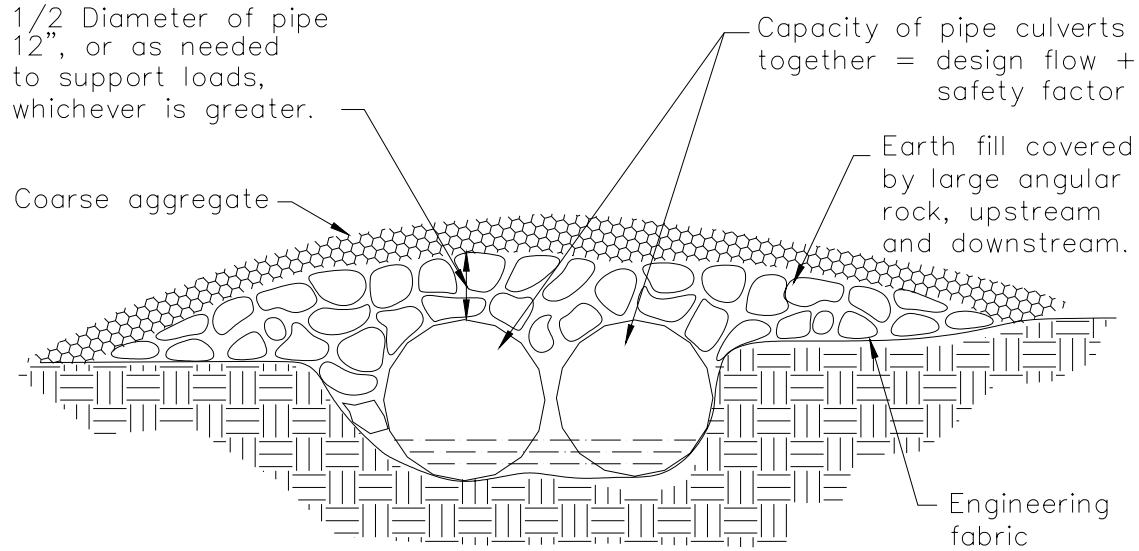

ELEVATION

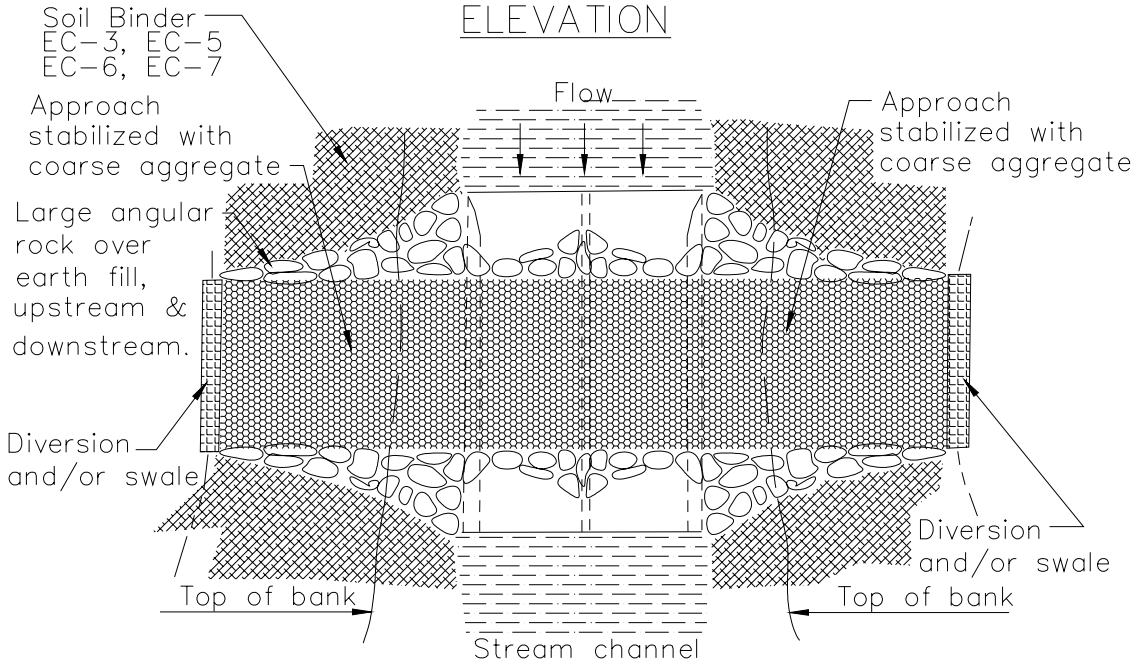

PLAN VIEW

TYPICAL CULVERT CROSSING
NOT TO SCALE

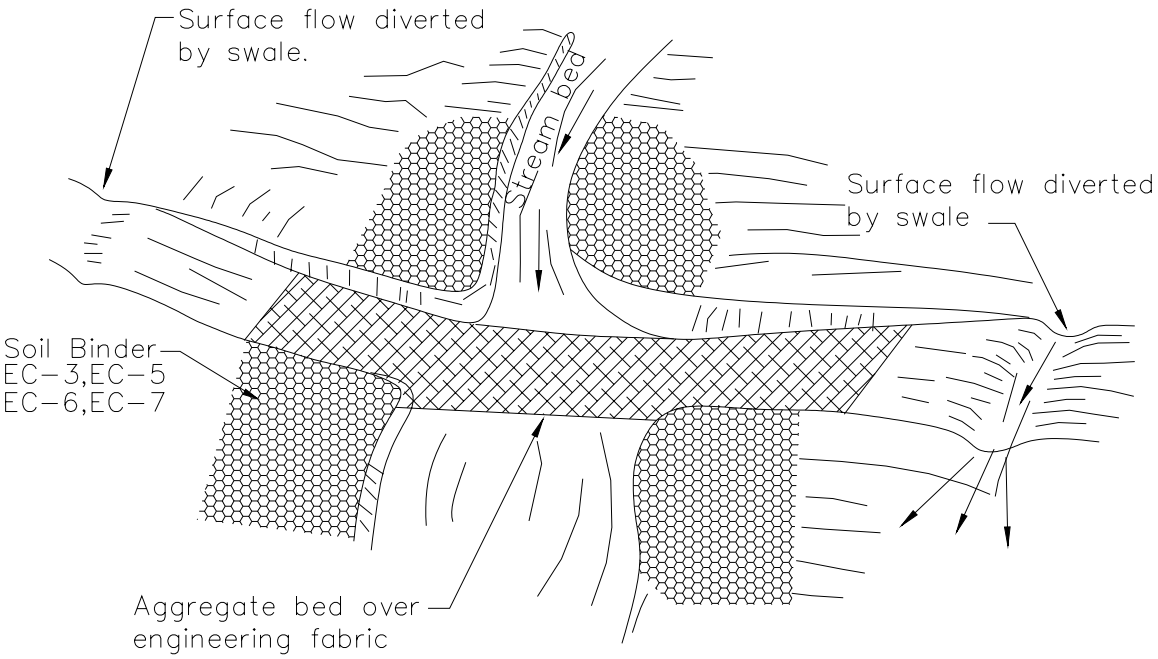

Aggregate approch
1:5 (V:H) Maximum slope on road

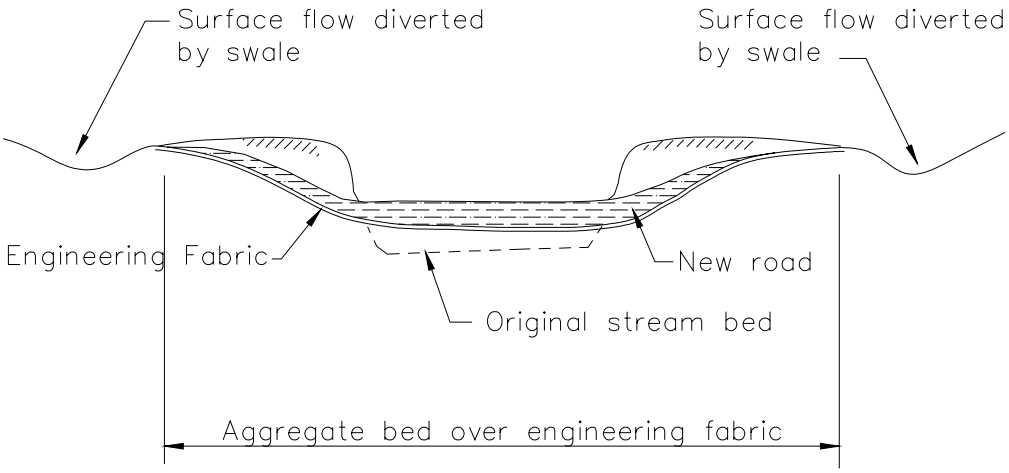

TYPICAL FORD CROSSING
NOT TO SCALE

Clear Water Diversion NS-5

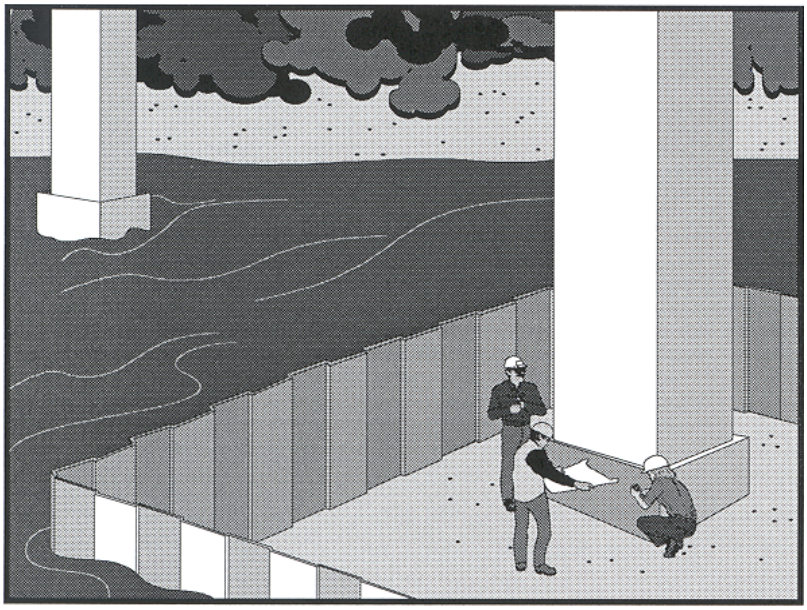

Objectives

EC	Erosion Control	
SE	Sediment Control	
TR	Tracking Control	
WE	Wind Erosion Control	
NS	Non-Stormwater Management Control	☑
WM	Waste Management and Materials Pollution Control	

Legend:

☑ **Primary Objective**

☒ **Secondary Objective**

Targeted Constituents

Sediment	☑
Nutrients	
Trash	
Metals	
Bacteria	
Oil and Grease	
Organics	

Potential Alternatives

None

Description and Purpose

Clear water diversion consists of a system of structures and measures that intercept clear surface water runoff upstream of a project, transport it around the work area, and discharge it downstream with minimal water quality degradation from either the project construction operations or the construction of the diversion. Clear water diversions are used in a waterway to enclose a construction area and reduce sediment pollution from construction work occurring in or adjacent to water. Structures commonly used as part of this system include diversion ditches, berms, dikes, slope drains, rock, gravel bags, wood, aqua barriers, cofferdams, filter fabric or turbidity curtains, drainage and interceptor swales, pipes, or flumes.

Suitable Applications

A clear water diversion is typically implemented where appropriate permits (1601 Agreement) have been secured and work must be performed in a flowing stream or water body.

- Clear water diversions are appropriate for isolating construction activities occurring within or near a water body such as streambank stabilization, or culvert, bridge, pier or abutment installation. They may also be used in combination with other methods, such as clear water bypasses and/or pumps.
- Pumped diversions are suitable for intermittent and low flow streams.
- Excavation of a temporary bypass channel, or passing the flow through a heavy pipe (called a “flume”) with a trench

excavated under it, is appropriate for the diversion of streams less than 20 ft wide, with flow rates less than 100 cfs.

- Clear water diversions incorporating clean washed gravel may be appropriate for use in salmonid spawning streams.

Limitations

- Diversion and encroachment activities will usually disturb the waterway during installation and removal of diversion structures.
- Installation may require Regional Water Quality Control Board (RWQCB) 401 Certification, U.S. Army Corps of Engineers 404 permit and approval by California Department of Fish and Game. If numerical-based water quality standards are mentioned in any of these and other related permits, testing and sampling may be required.
- Diversion and encroachment activities may constrict the waterway, which can obstruct flood flows and cause flooding or washouts. Diversion structures should not be installed without identifying potential impacts to the stream channel.
- Diversion or isolation activities are not appropriate in channels where there is insufficient stream flow to support aquatic species in the area dewatered as a result of the diversion.
- Diversion or isolation activities are inappropriate in deep water unless designed or reviewed by an engineer registered in California.
- Diversion or isolation activities should not completely dam stream flow.
- Dewatering and removal may require additional sediment control or water treatment. See NS-2, Dewatering Operations.
- Not appropriate if installation, maintenance, and removal of the structures will disturb sensitive aquatic species of concern.

Implementation

General

- Implement guidelines presented in NS-17, Streambank Stabilization to minimize impacts to streambanks.
- Where working areas encroach on flowing streams, barriers adequate to prevent the flow of muddy water into streams should be constructed and maintained between working areas and streams. During construction of the barriers, muddying of streams should be held to a minimum.
- Diversion structures must be adequately designed to accommodate fluctuations in water depth or flow volume due to tides, storms, flash floods, etc.
- Heavy equipment driven in wet portions of a water body to accomplish work should be completely clean of petroleum residue, and water levels should be below the fuel tanks, gearboxes, and axles of the equipment unless lubricants and fuels are sealed such that inundation by water will not result in discharges of fuels, oils, greases, or hydraulic fluids.

- Excavation equipment buckets may reach out into the water for the purpose of removing or placing fill materials. Only the bucket of the crane/ excavator/backhoe may operate in a water body. The main body of the crane/excavator/backhoe should not enter the water body except as necessary to cross the stream to access the work site.
- Stationary equipment such as motors and pumps located within or adjacent to a water body, should be positioned over drip pans.
- When any artificial obstruction is being constructed, maintained, or placed in operation, sufficient water should, at all times, be allowed to pass downstream to maintain aquatic life.
- Equipment should not be parked below the high water mark unless allowed by a permit.
- Disturbance or removal of vegetation should not exceed the minimum necessary to complete operations. Precautions should be taken to avoid damage to vegetation by people or equipment. Disturbed vegetation should be replaced with the appropriate erosion control measures.
- Riparian vegetation approved for trimming as part of the project should be cut off no lower than ground level to promote rapid re-growth. Access roads and work areas built over riparian vegetation should be covered by a sufficient layer of clean river run cobble to prevent damage to the underlying soil and root structure. The cobble should be removed upon completion of project activities.
- Drip pans should be placed under all vehicles and equipment placed on docks, barges, or other structures over water bodies when the vehicle or equipment is planned to be idle for more than 1 hour.
- Where possible, avoid or minimize diversion and encroachment impacts by scheduling construction during periods of low flow or when the stream is dry. Scheduling should also consider seasonal releases of water from dams, fish migration and spawning seasons, and water demands due to crop irrigation.
- Construct diversion structures with materials free of potential pollutants such as soil, silt, sand, clay, grease, or oil.

Temporary Diversions and Encroachments

- Construct diversion channels in accordance with EC-9, Earth Dikes and Drainage Swales.
- In high flow velocity areas, stabilize slopes of embankments and diversion ditches using an appropriate liner, in accordance with EC-7, Geotextiles and Mats, or use rock slope protection.
- Where appropriate, use natural streambed materials such as large cobbles and boulders for temporary embankment and slope protection, or other temporary soil stabilization methods.
- Provide for velocity dissipation at transitions in the diversion, such as the point where the stream is diverted to the channel and the point where the diverted stream is returned to its natural channel. See also EC-10, Velocity Dissipation Devices.

Temporary Dry Construction Areas

- When dewatering behind temporary structures to create a temporary dry construction area, such as cofferdams, pass pumped water through a sediment-settling device, such as a portable tank or settling basin, before returning water to the water body. See also NS-2, Dewatering Operations.

- Any substance used to assemble or maintain diversion structures, such as form oil, should be non-toxic and non-hazardous.

- Any material used to minimize seepage underneath diversion structures, such as grout, should be non-toxic, non-hazardous, and as close to a neutral pH as possible.

Comparison of Diversion and Isolation Techniques:

- Gravel bags are relatively inexpensive, but installation and removal can be labor intensive. It is also difficult to dewater the isolated area. Sandbags should not be used for this technique in rivers or streams, as sand should never be put into or adjacent to a stream, even if encapsulated in geotextile.

- Gravel Bag Berms (SE-6) used in conjunction with an impermeable membrane are cost effective, and can be dewatered relatively easily. If spawning gravel is used, the impermeable membrane can be removed from the stream, and the gravel can be spread out and left as salmonid spawning habitat if approved in the permit. Only clean, washed gravel should be used for both the gravel bag and gravel berm techniques.

- Cofferdams are relatively expensive, but frequently allow full dewatering. Also, many options now available are relatively easy to install.

- Sheet pile enclosures are a much more expensive solution, but do allow full dewatering. This technique is not well suited to small streams, but can be effective on large rivers or lakes, and where staging and heavy equipment access areas are available.

- K-rails are an isolation method that does not allow full dewatering, but can be used in small to large watercourses, and in fast-water situations.

- A relatively inexpensive isolation method is filter fabric isolation. This method involves placement of gravel bags or continuous berms to 'key-in' the fabric, and subsequently staking the fabric in place. This method should be used in relatively calm water, and can be used in smaller streams. Note that this is not a dewatering method, but rather a sediment isolation method.

- Turbidity curtains should be used where sediment discharge to a stream is unavoidable. They can also be used for in-stream construction, when dewatering an area is not required.

- When used in watercourses or streams, cofferdams must be used in accordance with permit requirements.

- Manufactured diversion structures should be installed following manufacturer's specifications.

- Filter fabric and turbidity curtain isolation installation methods can be found in the specific technique descriptions that follow.

Filter Fabric Isolation Technique

Definition and Purpose

A filter fabric isolation structure is a temporary structure built into a waterway to enclose a construction area and reduce sediment pollution from construction work in or adjacent to water. This structure is composed of filter fabric, gravel bags, and steel t-posts.

Appropriate Applications

- Filter fabric may be used for construction activities such as streambank stabilization, or culvert, bridge, pier or abutment installation. It may also be used in combination with other methods, such as clean water bypasses and/or pumps.
- Filter fabric isolation is relatively inexpensive. This method involves placement of gravel bags or continuous berms to 'key-in' the fabric, and subsequently staking the fabric in place.
- If spawning gravel is used, all other components of the isolation can be removed from the stream, and the gravel may be spread out and left as salmonid spawning habitat if approved in the permit. Whether spawning gravel or other types of gravel are used, only clean washed gravel should be used as infill for the gravel bags or continuous berm.
- This method should be used in relatively calm water, and can be used in smaller streams. This is not a dewatering method, but rather a sediment isolation method.
- Water levels inside and outside the fabric curtain must be about the same, as differential heads will cause the curtain to collapse.

Limitations

- Do not use if the installation, maintenance and removal of the structures will disturb sensitive aquatic species of concern.
- Filter fabrics are not appropriate for projects where dewatering is necessary.
- Filter fabrics are not appropriate to completely dam stream flow.

Design and Installation

- For the filter fabric isolation method, a non-woven or heavy-duty fabric is recommended over standard silt fence. Using rolled geotextiles allows non-standard widths to be used.
- Anchor filter fabric with gravel bags filled with clean, washed gravel. Do not use sand. If a bag should split open, the gravel can be left in the stream, where it can provide aquatic habitat benefits. If a sandbag splits open in a watercourse, the sand could cause a decrease in water quality, and could bury sensitive aquatic habitat.
- Another anchor alternative is a continuous berm, made with the Continuous Berm Machine. This is a gravel-filled bag that can be made in very long segments. The length of the berms is usually limited to 18 ft for ease of handling (otherwise, it gets too heavy to move).

- Place the fabric on the bottom of the stream, and place either a bag of clean, washed gravel or a continuous berm over the bottom of the silt fence fabric, such that a bag-width of fabric lies on the stream bottom. The bag should be placed on what will be the outside of the isolation area.
- Pull the fabric up, and place a metal t-post immediately behind the fabric, on the inside of the isolation area; attach the silt fence to the post with three diagonal nylon ties.
- Continue placing fabric as described above until the entire work area has been isolated, staking the fabric at least every 6 ft.

Inspection and Maintenance

- Immediately repair any gaps, holes or scour.
- Remove and properly dispose of sediment buildup.
- Remove BMP upon completion of construction activity. Recycle or reuse if applicable.
- Revegetate areas disturbed by BMP removal if needed.

Turbidity Curtain Isolation Technique

Definition and Purpose

A turbidity curtain is a fabric barrier used to isolate the near shore work area. The barriers are intended to confine the suspended sediment. The curtain is a floating barrier, and thus does not prevent water from entering the isolated area; rather, it prevents suspended sediment from getting out.

Appropriate Applications

Turbidity curtains should be used where sediment discharge to a stream is unavoidable. They are used when construction activities adjoin quiescent waters, such as lakes, ponds, and slow flowing rivers. The curtains are designed to deflect and contain sediment within a limited area and provide sufficient retention time so that the sediment particles will fall out of suspension.

Limitations

- Turbidity curtains should not be used in flowing water; they are best suited for use in ponds, lakes, and very slow-moving rivers.
- Turbidity curtains should not be placed across the width of a channel.
- Removing sediment that has been deflected and settled out by the curtain may create a discharge problem through the resuspension of particles and by accidental dumping by the removal equipment.

Design and Installation

- Turbidity curtains should be oriented parallel to the direction of flow.
- The curtain should extend the entire depth of the watercourse in calm-water situations.
- In wave conditions, the curtain should extend to within 1 ft of the bottom of the watercourse, such that the curtain does not stir up sediment by hitting the bottom repeatedly. If it is

desirable for the curtain to reach the bottom in an active-water situation, a pervious filter fabric may be used for the bottom 1 ft.

- The top of the curtain should consist of flexible flotation buoys, and the bottom should be held down by a load line incorporated into the curtain fabric. The fabric should be a brightly colored impervious mesh.
- The curtain should be held in place by anchors placed at least every 100 ft.
- First, place the anchors, then tow the fabric out in a furled condition, and connect to the anchors. The anchors should be connected to the flotation devices, and not to the bottom of the curtain. Once in place, cut the furling lines, and allow the bottom of the curtain to sink.
- Consideration must be given to the probable outcome of the removal procedure. It must be determined if it will create more of a sediment problem through re-suspension of the particles or by accidental dumping of material during removal. It is recommended that the soil particles trapped by the turbidity curtain only be removed if there has been a significant change in the original contours of the affected area in the watercourse.
- Particles should always be allowed to settle for a minimum of 6 to 12 hours prior to their removal or prior to removal of the turbidity curtain.

Maintenance and Inspection:

- The curtain should be inspected for holes or other problems, and any repairs needed should be made promptly.
- Allow sediment to settle for 6 to 12 hours prior to removal of sediment or curtain. This means that after removing sediment, wait an additional 6 to 12 hours before removing the curtain.
- To remove, install furling lines along the curtain, detach from anchors, and tow out of the water.

K-rail River Isolation

Definition and Purpose

This temporary sediment control or stream isolation method uses K-rails to form the sediment deposition area, or to isolate the in-stream or near-bank construction area.

Barriers are placed end-to-end in a pre-designed configuration and gravel-filled bags are used at the toe of the barrier and at their abutting ends to seal and prevent movement of sediment beneath or through the barrier walls.

Appropriate Applications

The K-rail isolation can be used in streams with higher water velocities than many other isolation techniques.

- This technique is also useful at the toe of embankments, and cut or fill slopes.

Limitations

- The K-rail method should not be used to dewater a project site, as the barrier is not watertight.

Design and Installation

- To create a floor for the K-rail, move large rocks and obstructions. Place washed gravel and gravel-filled bags to create a level surface for K-rails to sit. Washed gravel should always be used.
- Place the bottom two K-rails adjacent to each other, and parallel to the direction of flow; fill the center portion with gravel bags. Then place the third K-rail on top of the bottom two. There should be sufficient gravel bags between the bottom K-rails such that the top rail is supported by the gravel. Place plastic sheeting around the K-rails, and secure at the bottom with gravel bags.
- Further support can be added by pinning and cabling the K-rails together. Also, large riprap and boulders can be used to support either side of the K-rail, especially where there is strong current.

Inspection and Maintenance:

- The barrier should be inspected and any leaks, holes, or other problems should be addressed immediately.
- Sediment should be allowed to settle for at least 6 to 12 hours prior to removal of sediment, and for 6 to 12 hours prior to removal of the barrier.

Stream Diversions

The selection of which stream diversion technique to use will depend upon the type of work involved, physical characteristics of the site, and the volume of water flowing through the project.

Advantages of a Pumped Diversion

- Downstream sediment transport can be nearly eliminated.
- Dewatering of the work area is possible.
- Pipes can be moved around to allow construction operations.
- The dams can serve as temporary access to the site.
- Increased flows can be managed by adding more pumping capacity.

Disadvantages of a Pumped Diversion

- Flow volume is limited by pump capacity.
- A pumped diversion requires 24 hour monitoring of pumps.
- Sudden rain could overtop dams.
- Erosion at the outlet.

- Minor in-stream disturbance is required to install and remove dams.

Advantages of Excavated Channels and Flumes

- Excavated channels isolate work from water flow and allow dewatering.
- Excavated channels can handle larger flows than pumps.

Disadvantages of Excavated Channels and Flumes

- Bypass channel or flume must be sized to handle flows, including possible floods.
- Channels must be protected from erosion.
- Flow diversion and re-direction with small dams involves in-stream disturbance and mobilization of sediment.

Design and Installation

- Installation guidelines will vary based on existing site conditions and type of diversion used.
- Pump capacity must be sufficient for design flow.
- A standby pump is required in case a primary pump fails.
- Dam materials used to create dams upstream and downstream of diversion should be erosion resistant; materials such as steel plate, sheet pile, sandbags, continuous berms, inflatable water bladders, etc., would be acceptable.

When constructing a diversion channel, begin excavation of the channel at the proposed downstream end, and work upstream. Once the watercourse to be diverted is reached and the excavated channel is stable, breach the upstream end and allow water to flow down the new channel. Once flow has been established in the diversion channel, install the diversion weir in the main channel; this will force all water to be diverted from the main channel.

Inspection and Maintenance

- Pumped diversions require 24 hour monitoring of pumps.
- Inspect embankments and diversion channels for damage to the linings, accumulating debris, sediment buildup, and adequacy of the slope protection. Remove debris and repair linings and slope protection as required. Remove holes, gaps, or scour.
- Upon completion of work, the diversion or isolation structure should be removed and flow should be redirected through the new culvert or back into the original stream channel. Recycle or reuse if applicable.
- Revegetate areas disturbed by BMP removal if needed.

Costs

Costs of clear water diversion vary considerably and can be very high.

Inspection and Maintenance

- Inspect and verify that activity-based BMPs are in place prior to the commencement of associated activities. While activities associated with the BMP are under way, inspect weekly during the rainy season and at two-week intervals in the non-rainy season to verify continued BMP implementation.
- Inspect BMPs subject to non-stormwater discharges daily while non-stormwater discharges occur.
- Refer to BMP-specific inspection and maintenance requirements.

References

California Bank and Shore Rock Slope Protection Design – Practitioners Guide and Field Evaluations of Riprap Methods, Caltrans Study No. F90TL03, October, 2000.

Stormwater Quality Handbooks - Construction Site Best Management Practices (BMPs) Manual, State of California Department of Transportation (Caltrans), November 2000.

Illicit Connection / Discharge NS-6

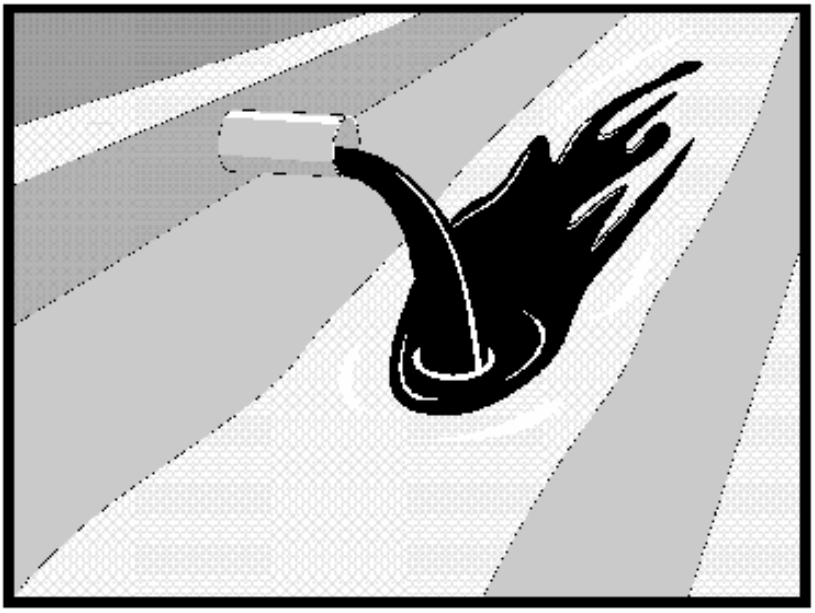

Objectives

EC	Erosion Control	
SE	Sediment Control	
TR	Tracking Control	
WE	Wind Erosion Control	
NS	Non-Stormwater Management Control	☑
WM	Waste Management and Materials Pollution Control	

Legend:

☑ **Primary Objective**

☒ **Secondary Objective**

Targeted Constituents

Sediment	
Nutrients	☑
Trash	☑
Metals	☑
Bacteria	☑
Oil and Grease	☑
Organics	☑

Potential Alternatives

None

Description and Purpose

Procedures and practices designed for construction contractors to recognize illicit connections or illegally dumped or discharged materials on a construction site and report incidents.

Suitable Applications

This best management practice (BMP) applies to all construction projects. Illicit connection/discharge and reporting is applicable anytime an illicit connection or discharge is discovered or illegally dumped material is found on the construction site.

Limitations

Illicit connections and illegal discharges or dumping, for the purposes of this BMP, refer to discharges and dumping caused by parties other than the contractor. If pre-existing hazardous materials or wastes are known to exist onsite, they should be identified in the SWPPP and handled as set forth in the SWPPP.

Implementation

Planning

- Review the SWPPP. Pre-existing areas of contamination should be identified and documented in the SWPPP.
- Inspect site before beginning the job for evidence of illicit connections, illegal dumping or discharges. Document any pre-existing conditions and notify the owner.

- Inspect site regularly during project execution for evidence of illicit connections, illegal dumping or discharges.
- Observe site perimeter for evidence for potential of illicitly discharged or illegally dumped material, which may enter the job site.

Identification of Illicit Connections and Illegal Dumping or Discharges

- **General –** unlabeled and unidentifiable material should be treated as hazardous.
- **Solids** - Look for debris, or rubbish piles. Solid waste dumping often occurs on roadways with light traffic loads or in areas not easily visible from the traveled way.
- **Liquids** - signs of illegal liquid dumping or discharge can include:
  - Visible signs of staining or unusual colors to the pavement or surrounding adjacent soils
  - Pungent odors coming from the drainage systems
  - Discoloration or oily substances in the water or stains and residues detained within ditches, channels or drain boxes
  - Abnormal water flow during the dry weather season
- **Urban Areas** - Evidence of illicit connections or illegal discharges is typically detected at storm drain outfall locations or at manholes. Signs of an illicit connection or illegal discharge can include:
  - Abnormal water flow during the dry weather season
  - Unusual flows in sub drain systems used for dewatering
  - Pungent odors coming from the drainage systems
  - Discoloration or oily substances in the water or stains and residues detained within ditches, channels or drain boxes
  - Excessive sediment deposits, particularly adjacent to or near active offsite construction projects
- **Rural Areas** - Illicit connections or illegal discharges involving irrigation drainage ditches are detected by visual inspections. Signs of an illicit discharge can include:
  - Abnormal water flow during the non-irrigation season
  - Non-standard junction structures
  - Broken concrete or other disturbances at or near junction structures

Reporting

Notify the owner of any illicit connections and illegal dumping or discharge incidents at the time of discovery. For illicit connections or discharges to the storm drain system, notify the local stormwater management agency. For illegal dumping, notify the local law enforcement agency.

Cleanup and Removal

The responsibility for cleanup and removal of illicit or illegal dumping or discharges will vary by location. Contact the local stormwater management agency for further information.

Costs

Costs to look for and report illicit connections and illegal discharges and dumping are low. The best way to avoid costs associated with illicit connections and illegal discharges and dumping is to keep the project perimeters secure to prevent access to the site, to observe the site for vehicles that should not be there, and to document any waste or hazardous materials that exist onsite before taking possession of the site.

Inspection and Maintenance

- Inspect and verify that activity-based BMPs are in place prior to the commencement of associated activities. While activities associated with the BMP are under way, inspect weekly during the rainy season and at two-week intervals in the non-rainy season to verify continued BMP implementation.
- Inspect the site regularly to check for any illegal dumping or discharge.
- Prohibit employees and subcontractors from disposing of non-job related debris or materials at the construction site.
- Notify the owner of any illicit connections and illegal dumping or discharge incidents at the time of discovery.

References

Blueprint for a Clean Bay: Best Management Practices to Prevent Stormwater Pollution from Construction Related Activities; Santa Clara Valley Nonpoint Source Pollution Control Program, 1995.

Stormwater Quality Handbooks - Construction Site Best Management Practices (BMPs) Manual, State of California Department of Transportation (Caltrans), November 2000.

Stormwater Management for Construction Activities, Developing Pollution Prevention Plans and Best Management Practices, EPA 832-R-92005; USEPA, April 1992.

Potable Water/Irrigation NS-7

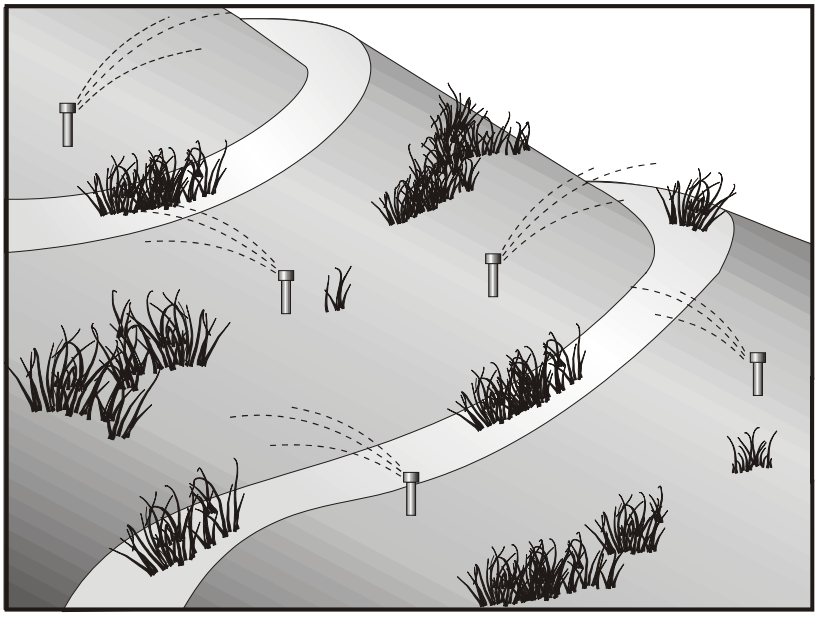

Objectives

EC	Erosion Control	
SE	Sediment Control	
TR	Tracking Control	
WE	Wind Erosion Control	
NS	Non-Stormwater Management Control	☑
WM	Waste Management and Materials Pollution Control	

Legend:

☑ **Primary Objective**

☒ **Secondary Objective**

Targeted Constituents

Sediment	☑
Nutrients	☑
Trash	
Metals	☑
Bacteria	
Oil and Grease	
Organics	☑

Potential Alternatives

None

Description and Purpose

Potable Water/Irrigation consists of practices and procedures to manage the discharge of potential pollutants generated during discharges from irrigation water lines, landscape irrigation, lawn or garden watering, planned and unplanned discharges from potable water sources, water line flushing, and hydrant flushing.

Suitable Applications

Implement this BMP whenever potable water or irrigation water discharges occur at or enter a construction site.

Limitations

None identified.

Implementation

- Direct water from offsite sources around or through a construction site, where feasible, in a way that minimizes contact with the construction site.
- Discharges from water line flushing should be reused for landscaping purposes where feasible.
- Shut off the water source to broken lines, sprinklers, or valves as soon as possible to prevent excess water flow.
- Protect downstream stormwater drainage systems and watercourses from water pumped or bailed from trenches excavated to repair water lines.

- Inspect irrigated areas within the construction limits for excess watering. Adjust watering times and schedules to ensure that the appropriate amount of water is being used and to minimize runoff. Consider factors such as soil structure, grade, time of year, and type of plant material in determining the proper amounts of water for a specific area.

Costs

Cost to manage potable water and irrigation are low and generally considered to be a normal part of related activities.

Inspection and Maintenance

- Inspect and verify that activity-based BMPs are in place prior to the commencement of associated activities. While activities associated with the BMP are under way, inspect weekly during the rainy season and at two-week intervals in the non-rainy season to verify continued BMP implementation.

- Inspect BMPs subject to non-stormwater discharges daily while non-stormwater discharges occur.

- Repair broken water lines as soon as possible.

- Inspect irrigated areas regularly for signs of erosion and/or discharge.

References

Blueprint for a Clean Bay: Best Management Practices to Prevent Stormwater Pollution from Construction Related Activities; Santa Clara Valley Nonpoint Source Pollution Control Program, 1995.

Stormwater Quality Handbooks - Construction Site Best Management Practices (BMPs) Manual, State of California Department of Transportation (Caltrans), November 2000.

Stormwater Management for Construction Activities, Developing Pollution Prevention Plans and Best Management Practices, EPA 832-R-92005; USEPA, April 1992.

Vehicle and Equipment Cleaning NS-8

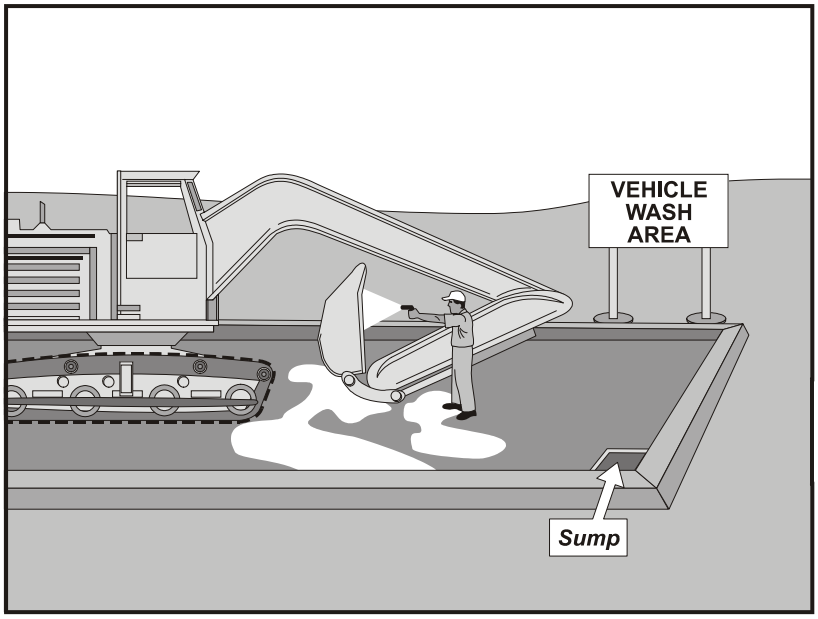

Objectives

EC	Erosion Control	
SE	Sediment Control	
TR	Tracking Control	
WE	Wind Erosion Control	
NS	Non-Stormwater Management Control	☑
WM	Waste Management and Materials Pollution Control	

Legend:

☑ **Primary Objective**

☒ **Secondary Objective**

Targeted Constituents

Sediment	☑
Nutrients	☑
Trash	
Metals	
Bacteria	
Oil and Grease	☑
Organics	☑

Potential Alternatives

None

Description and Purpose

Vehicle and equipment cleaning procedures and practices eliminate or reduce the discharge of pollutants to stormwater from vehicle and equipment cleaning operations. Procedures and practices include but are not limited to: using offsite facilities; washing in designated, contained areas only; eliminating discharges to the storm drain by infiltrating the wash water; and training employees and subcontractors in proper cleaning procedures.

Suitable Applications

These procedures are suitable on all construction sites where vehicle and equipment cleaning is performed.

Limitations

Even phosphate-free, biodegradable soaps have been shown to be toxic to fish before the soap degrades. Sending vehicles/equipment offsite should be done in conjunction with TR-1, Stabilized Construction Entrance/Exit.

Implementation

Other options to washing equipment onsite include contracting with either an offsite or mobile commercial washing business. These businesses may be better equipped to handle and dispose of the wash waters properly. Performing this work offsite can also be economical by eliminating the need for a separate washing operation onsite.

If washing operations are to take place onsite, then:

- Use phosphate-free, biodegradable soaps.
- Educate employees and subcontractors on pollution prevention measures.
- Do not permit steam cleaning onsite. Steam cleaning can generate significant pollutant concentrates.
- Cleaning of vehicles and equipment with soap, solvents or steam should not occur on the project site unless resulting wastes are fully contained and disposed of. Resulting wastes should not be discharged or buried, and must be captured and recycled or disposed according to the requirements of WM-10, Liquid Waste Management or WM-6, Hazardous Waste Management, depending on the waste characteristics. Minimize use of solvents. Use of diesel for vehicle and equipment cleaning is prohibited.
- All vehicles and equipment that regularly enter and leave the construction site must be cleaned offsite.
- When vehicle and equipment washing and cleaning must occur onsite, and the operation cannot be located within a structure or building equipped with appropriate disposal facilities, the outside cleaning area should have the following characteristics:
  - Located away from storm drain inlets, drainage facilities, or watercourses
  - Paved with concrete or asphalt and bermed to contain wash waters and to prevent runon and runoff
  - Configured with a sump to allow collection and disposal of wash water
  - No discharge of wash waters to storm drains or watercourses
  - Used only when necessary
- When cleaning vehicles and equipment with water:
  - Use as little water as possible. High-pressure sprayers may use less water than a hose and should be considered
  - Use positive shutoff valve to minimize water usage
  - Facility wash racks should discharge to a sanitary sewer, recycle system or other approved discharge system and must not discharge to the storm drainage system, watercourses, or to groundwater

Costs

Cleaning vehicles and equipment at an offsite facility may reduce overall costs for vehicle and equipment cleaning by eliminating the need to provide similar services onsite. When onsite cleaning is needed, the cost to establish appropriate facilities is relatively low on larger, long-duration projects, and moderate to high on small, short-duration projects.

Inspection and Maintenance

- Inspect and verify that activity-based BMPs are in place prior to the commencement of associated activities. While activities associated with the BMP are under way, inspect weekly during the rainy season and at two-week intervals in the non-rainy season to verify continued BMP implementation.
- Inspect BMPs subject to non-stormwater discharges daily while non-stormwater discharges occur.
- Inspection and maintenance is minimal, although some berm repair may be necessary.
- Monitor employees and subcontractors throughout the duration of the construction project to ensure appropriate practices are being implemented.
- Inspect sump regularly and remove liquids and sediment as needed.
- Prohibit employees and subcontractors from washing personal vehicles and equipment on the construction site.

References

Stormwater Quality Handbooks - Construction Site Best Management Practices (BMPs) Manual, State of California Department of Transportation (Caltrans), November 2000.

Swisher, R.D. Surfactant Biodegradation, Marcel Decker Corporation, 1987.

Vehicle and Equipment Fueling NS-9

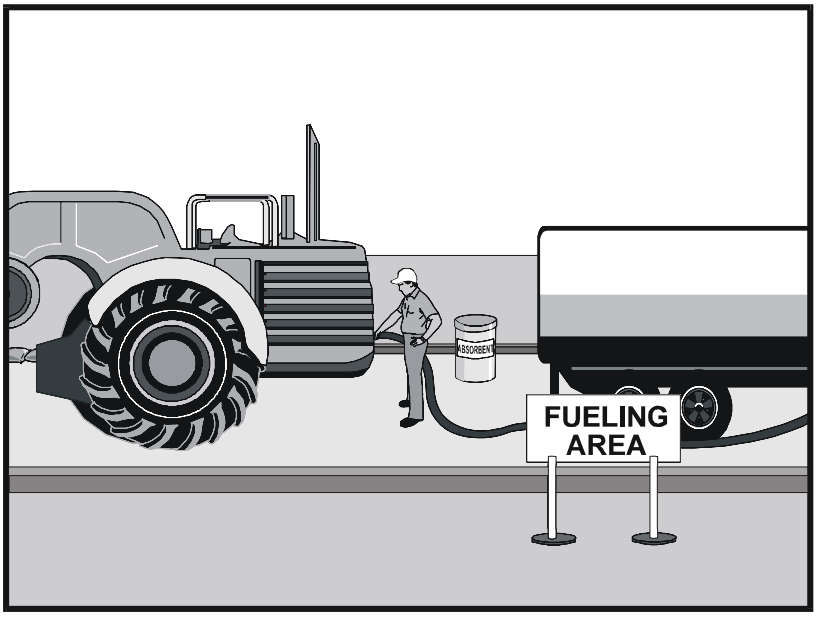

Objectives

EC	Erosion Control	
SE	Sediment Control	
TR	Tracking Control	
WE	Wind Erosion Control	
NS	Non-Stormwater Management Control	☑
WM	Waste Management and Materials Pollution Control	

Legend:

☑ **Primary Objective**

☒ **Secondary Objective**

Targeted Constituents

Sediment	
Nutrients	
Trash	
Metals	
Bacteria	
Oil and Grease	☑
Organics	

Potential Alternatives

None

Description and Purpose

Vehicle equipment fueling procedures and practices are designed to prevent fuel spills and leaks, and reduce or eliminate contamination of stormwater. This can be accomplished by using offsite facilities, fueling in designated areas only, enclosing or covering stored fuel, implementing spill controls, and training employees and subcontractors in proper fueling procedures.

Suitable Applications

These procedures are suitable on all construction sites where vehicle and equipment fueling takes place.

Limitations

Onsite vehicle and equipment fueling should only be used where it is impractical to send vehicles and equipment offsite for fueling. Sending vehicles and equipment offsite should be done in conjunction with TR-1, Stabilized Construction Entrance/ Exit.

Implementation

- Use offsite fueling stations as much as possible. These businesses are better equipped to handle fuel and spills properly. Performing this work offsite can also be economical by eliminating the need for a separate fueling area at a site.
- Discourage “topping-off” of fuel tanks.

- Absorbent spill cleanup materials and spill kits should be available in fueling areas and on fueling trucks, and should be disposed of properly after use.
- Drip pans or absorbent pads should be used during vehicle and equipment fueling, unless the fueling is performed over an impermeable surface in a dedicated fueling area.
- Use absorbent materials on small spills. Do not hose down or bury the spill. Remove the adsorbent materials promptly and dispose of properly.
- Avoid mobile fueling of mobile construction equipment around the site; rather, transport the equipment to designated fueling areas. With the exception of tracked equipment such as bulldozers and large excavators, most vehicles should be able to travel to a designated area with little lost time.
- Train employees and subcontractors in proper fueling and cleanup procedures.
- When fueling must take place onsite, designate an area away from drainage courses to be used. Fueling areas should be identified in the SWPPP.
- Dedicated fueling areas should be protected from stormwater runon and runoff, and should be located at least 50 ft away from downstream drainage facilities and watercourses. Fueling must be performed on level-grade areas.
- Protect fueling areas with berms and dikes to prevent runon, runoff, and to contain spills.
- Nozzles used in vehicle and equipment fueling should be equipped with an automatic shutoff to control drips. Fueling operations should not be left unattended.
- Use vapor recovery nozzles to help control drips as well as air pollution where required by Air Quality Management Districts (AQMD).
- Federal, state, and local requirements should be observed for any stationary above ground storage tanks.

Costs

- All of the above measures are low cost except for the capital costs of above ground tanks that meet all local environmental, zoning, and fire codes.

Inspection and Maintenance

- Vehicles and equipment should be inspected each day of use for leaks. Leaks should be repaired immediately or problem vehicles or equipment should be removed from the project site.
- Keep ample supplies of spill cleanup materials onsite.
- Immediately clean up spills and properly dispose of contaminated soil and cleanup materials.

References

Blueprint for a Clean Bay: Best Management Practices to Prevent Stormwater Pollution from Construction Related Activities; Santa Clara Valley Nonpoint Source Pollution Control Program, 1995.

Coastal Nonpoint Pollution Control Program: Program Development and Approval Guidance, Working Group Working Paper; USEPA, April 1992.

Stormwater Quality Handbooks - Construction Site Best Management Practices (BMPs) Manual, State of California Department of Transportation (Caltrans), November 2000.

Stormwater Management for Construction Activities, Developing Pollution Prevention Plans and Best Management Practices, EPA 832-R-92005; USEPA, April 1992.

Vehicle & Equipment Maintenance NS-10

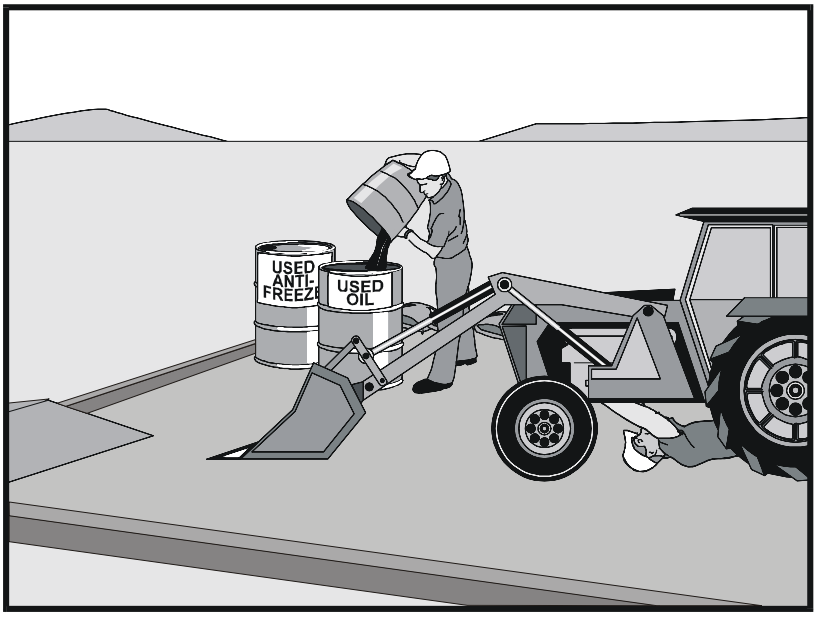

Objectives

EC	Erosion Control	
SE	Sediment Control	
TR	Tracking Control	
WE	Wind Erosion Control	
NS	Non-Stormwater Management Control	☑
WM	Waste Management and Materials Pollution Control	

Legend:

☑ **Primary Objective**

☒ **Secondary Objective**

Targeted Constituents

Sediment	
Nutrients	☑
Trash	☑
Metals	
Bacteria	
Oil and Grease	☑
Organics	☑

Potential Alternatives

None

Description and Purpose

Prevent or reduce the contamination of stormwater resulting from vehicle and equipment maintenance by running a "dry and clean site". The best option would be to perform maintenance activities at an offsite facility. If this option is not available then work should be performed in designated areas only, while providing cover for materials stored outside, checking for leaks and spills, and containing and cleaning up spills immediately. Employees and subcontractors must be trained in proper procedures.

Suitable Applications

These procedures are suitable on all construction projects where an onsite yard area is necessary for storage and maintenance of heavy equipment and vehicles.

Limitations

Onsite vehicle and equipment maintenance should only be used where it is impractical to send vehicles and equipment offsite for maintenance and repair. Sending vehicles/equipment offsite should be done in conjunction with TR-1, Stabilized Construction Entrance/Exit.

Outdoor vehicle or equipment maintenance is a potentially significant source of stormwater pollution. Activities that can contaminate stormwater include engine repair and service, changing or replacement of fluids, and outdoor equipment storage and parking (engine fluid leaks). For further information on vehicle or equipment servicing, see NS-8, Vehicle and Equipment Cleaning, and NS-9, Vehicle and Equipment Fueling.

CASQA
CALIFORNIA STORMWATER QUALITY ASSOCIATION

Implementation

- Use offsite repair shops as much as possible. These businesses are better equipped to handle vehicle fluids and spills properly. Performing this work offsite can also be economical by eliminating the need for a separate maintenance area.
- If maintenance must occur onsite, use designated areas, located away from drainage courses. Dedicated maintenance areas should be protected from stormwater runon and runoff, and should be located at least 50 ft from downstream drainage facilities and watercourses.
- Drip pans or absorbent pads should be used during vehicle and equipment maintenance work that involves fluids, unless the maintenance work is performed over an impermeable surface in a dedicated maintenance area.
- Place a stockpile of spill cleanup materials where it will be readily accessible.
- All fueling trucks and fueling areas are required to have spill kits and/or use other spill protection devices.
- Use adsorbent materials on small spills. Remove the absorbent materials promptly and dispose of properly.
- Inspect onsite vehicles and equipment daily at startup for leaks, and repair immediately.
- Keep vehicles and equipment clean; do not allow excessive build-up of oil and grease.
- Segregate and recycle wastes, such as greases, used oil or oil filters, antifreeze, cleaning solutions, automotive batteries, hydraulic and transmission fluids. Provide secondary containment and covers for these materials if stored onsite.
- Train employees and subcontractors in proper maintenance and spill cleanup procedures.
- Drip pans or plastic sheeting should be placed under all vehicles and equipment placed on docks, barges, or other structures over water bodies when the vehicle or equipment is planned to be idle for more than 1 hour.
- For long-term projects, consider using portable tents or covers over maintenance areas if maintenance cannot be performed offsite.
- Consider use of new, alternative greases and lubricants, such as adhesive greases, for chassis lubrication and fifth-wheel lubrication.
- Properly dispose of used oils, fluids, lubricants, and spill cleanup materials.
- Do not place used oil in a dumpster or pour into a storm drain or watercourse.
- Properly dispose of or recycle used batteries.
- Do not bury used tires.
- Repair leaks of fluids and oil immediately.

Listed below is further information if you must perform vehicle or equipment maintenance onsite.

Safer Alternative Products

- Consider products that are less toxic or hazardous than regular products. These products are often sold under an "environmentally friendly" label.
- Consider use of grease substitutes for lubrication of truck fifth-wheels. Follow manufacturers label for details on specific uses.
- Consider use of plastic friction plates on truck fifth-wheels in lieu of grease. Follow manufacturers label for details on specific uses.

Waste Reduction

Parts are often cleaned using solvents such as trichloroethylene, trichloroethane, or methylene chloride. Many of these cleaners are listed in California Toxic Rule as priority pollutants. These materials are harmful and must not contaminate stormwater. They must be disposed of as a hazardous waste. Reducing the number of solvents makes recycling easier and reduces hazardous waste management costs. Often, one solvent can perform a job as well as two different solvents. Also, if possible, eliminate or reduce the amount of hazardous materials and waste by substituting non-hazardous or less hazardous materials. For example, replace chlorinated organic solvents with non-chlorinated solvents. Non-chlorinated solvents like kerosene or mineral spirits are less toxic and less expensive to dispose of properly. Check the list of active ingredients to see whether it contains chlorinated solvents. The "chlor" term indicates that the solvent is chlorinated. Also, try substituting a wire brush for solvents to clean parts.

Recycling and Disposal

Separating wastes allows for easier recycling and may reduce disposal costs. Keep hazardous wastes separate, do not mix used oil solvents, and keep chlorinated solvents (like,-trichloroethane) separate from non-chlorinated solvents (like kerosene and mineral spirits). Promptly transfer used fluids to the proper waste or recycling drums. Don't leave full drip pans or other open containers lying around. Provide cover and secondary containment until these materials can be removed from the site.

Oil filters can be recycled. Ask your oil supplier or recycler about recycling oil filters.

Do not dispose of extra paints and coatings by dumping liquid onto the ground or throwing it into dumpsters. Allow coatings to dry or harden before disposal into covered dumpsters.

Store cracked batteries in a non-leaking secondary container. Do this with all cracked batteries, even if you think all the acid has drained out. If you drop a battery, treat it as if it is cracked. Put it into the containment area until you are sure it is not leaking.

Costs

All of the above are low cost measures. Higher costs are incurred to setup and maintain onsite maintenance areas.

NS-10 Vehicle & Equipment Maintenance

Inspection and Maintenance

- Inspect and verify that activity-based BMPs are in place prior to the commencement of associated activities. While activities associated with the BMP are under way, inspect weekly during the rainy season and at two-week intervals in the non-rainy season to verify continued BMP implementation.
- Inspect BMPs subject to non-stormwater discharges daily while non-stormwater discharges occur.
- Keep ample supplies of spill cleanup materials onsite.
- Maintain waste fluid containers in leak proof condition.
- Vehicles and equipment should be inspected on each day of use. Leaks should be repaired immediately or the problem vehicle(s) or equipment should be removed from the project site.
- Inspect equipment for damaged hoses and leaky gaskets routinely. Repair or replace as needed.

References

Blueprint for a Clean Bay: Best Management Practices to Prevent Stormwater Pollution from Construction Related Activities; Santa Clara Valley Nonpoint Source Pollution Control Program, 1995.

Coastal Nonpoint Pollution Control Program; Program Development and Approval Guidance, Working Group, Working Paper; USEPA, April 1992.

Stormwater Quality Handbooks - Construction Site Best Management Practices (BMPs) Manual, State of California Department of Transportation (Caltrans), November 2000.

Pile Driving Operations NS-11

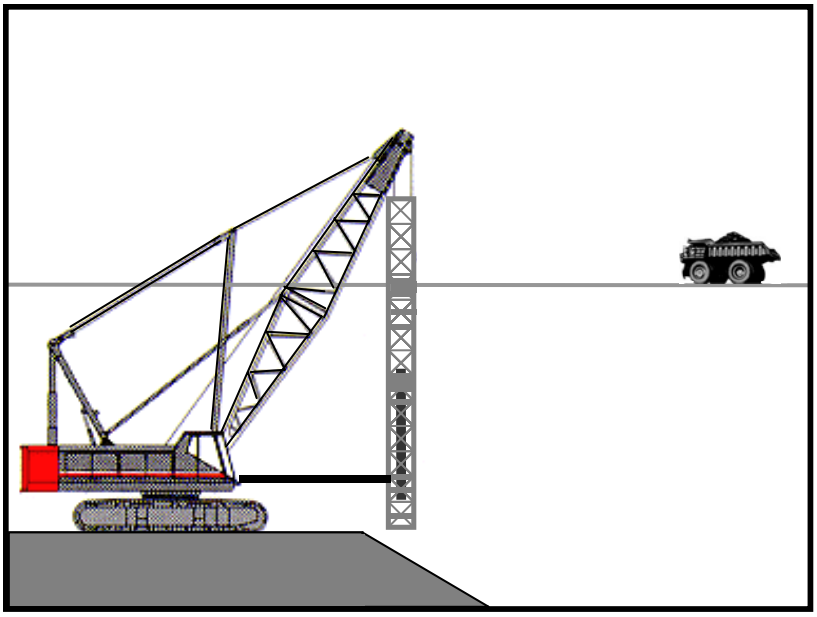

Objectives

EC	Erosion Control	
SE	Sediment Control	
TR	Tracking Control	
WE	Wind Erosion Control	
NS	Non-Stormwater Management Control	☑
WM	Waste Management and Materials Pollution Control	

Legend:

☑ **Primary Objective**

☒ **Secondary Objective**

Targeted Constituents

Sediment	☑
Nutrients	
Trash	
Metals	
Bacteria	
Oil and Grease	☑
Organics	

Potential Alternatives

None

Description and Purpose

The construction and retrofit of bridges and retaining walls often include driving piles for foundation support and shoring operations. Driven piles are typically constructed of precast concrete, steel, or timber. Driven sheet piles are also used for shoring and cofferdam construction. Proper control and use of equipment, materials, and waste products from pile driving operations will reduce or eliminate the discharge of potential pollutants to the storm drain system, watercourses, and waters of the United States.

Suitable Applications

These procedures apply to all construction sites near or adjacent to a watercourse or groundwater where permanent and temporary pile driving (impact and vibratory) takes place, including operations using pile shells as well as construction of cast-in-steel-shell and cast-in-drilled-hole piles.

Limitations

None identified.

Implementation

- Use drip pans or absorbent pads during vehicle and equipment operation, maintenance, cleaning, fueling, and storage. Refer to NS-8, Vehicle and Equipment Cleaning, NS-9, Vehicle and Equipment Fueling, and NS-10, Vehicle and Equipment Maintenance.

CASQA
CALIFORNIA STORMWATER QUALITY ASSOCIATION

- Have spill kits and cleanup materials available at all locations of pile driving. Refer to WM-4, Spill Prevention and Control.
- Equipment that is stored or in use in streambeds, or on docks, barges, or other structures over water bodies should be kept leak free.
- Park equipment over plastic sheeting or equivalent where possible. Plastic is not a substitute for drip pans or absorbent pads. The storage or use of equipment in streambeds or other bodies of water must comply with all applicable permits.
- Implement other BMPs as applicable, such as NS-2, Dewatering Operations, WM-5, Solid Waste Management, WM-6, Hazardous Waste Management, and WM-10, Liquid Waste Management.
- When not in use, store pile-driving equipment away from concentrated flows of stormwater, drainage courses, and inlets. Protect hammers and other hydraulic attachments from runon and runoff by placing them on plywood and covering them with plastic or a comparable material prior to the onset of rain.
- Use less hazardous products, e.g., vegetable oil, when practicable.

Costs

All of the above measures can be low cost.

Inspection and Maintenance

- Inspect and verify that activity-based BMPs are in place prior to the commencement of associated activities. While activities associated with the BMP are under way, inspect weekly during the rainy season and at two-week intervals in the non-rainy season to verify continued BMP implementation.
- Inspect BMPs subject to non-stormwater discharges daily while non-stormwater discharges occur.
- Inspect equipment every day at startup and repair equipment as needed (i.e., worn or damaged hoses, fittings, and gaskets). Recheck equipment at shift changes or at the end of the day and scheduled repairs as needed.

References

Stormwater Quality Handbooks - Construction Site Best Management Practices (BMPs) Manual, State of California Department of Transportation (Caltrans), November 2000.

Stormwater Management for Construction Activities, Developing Pollution Prevention Plans and Best Management Practices, EPA 832-R-92005; USEPA, April 1992.

Concrete Curing NS-12

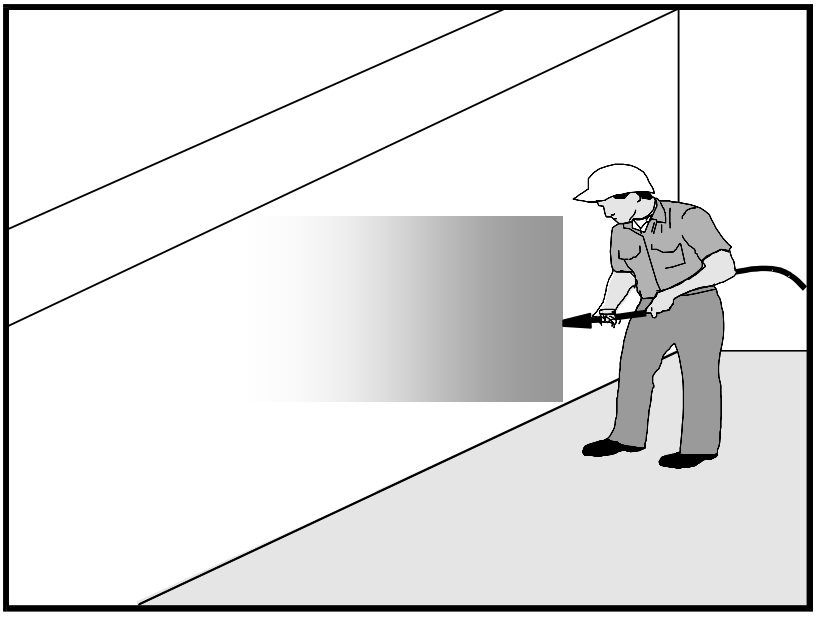

Objectives

EC	Erosion Control	
SE	Sediment Control	
TR	Tracking Control	
WE	Wind Erosion Control	
NS	Non-Stormwater Management Control	☑
WM	Waste Management and Materials Pollution Control	☑

Legend:

☑ **Primary Objective**

☒ **Secondary Objective**

Targeted Constituents

Sediment	☑
Nutrients	
Trash	
Metals	☑
Bacteria	
Oil and Grease	☑
Organics	

Potential Alternatives

None

Description and Purpose

Concrete curing is used in the construction of structures such as bridges, retaining walls, pump houses, large slabs, and structured foundations. Concrete curing includes the use of both chemical and water methods. Discharges of stormwater and non-stormwater exposed to concrete during curing may have a high pH and may contain chemicals, metals, and fines. Proper procedures reduce or eliminate the contamination of stormwater runoff during concrete curing.

Suitable Applications

Suitable applications include all projects where Portland Cement Concrete (PCC) and concrete curing chemicals are placed where they can be exposed to rainfall, runoff from other areas, or where runoff from the PCC will leave the site.

Limitations

None identified.

Implementation

Chemical Curing

- Avoid over spray of curing compounds.
- Minimize the drift of chemical cure as much as possible by applying the curing compound close to the concrete surface. Apply an amount of compound that covers the surface, but does not allow any runoff of the compound.

- Use proper storage and handling techniques for concrete curing compounds. Refer to WM-1, Material Delivery and Storage.
- Protect drain inlets prior to the application of curing compounds.
- Refer to WM-4, Spill Prevention and Control.

Water Curing for Bridge Decks, Retaining Walls, and other Structures

- Direct cure water away from inlets and watercourses to collection areas for infiltration or other means of removal in accordance with all applicable permits.
- Collect cure water at the top of slopes and transport or dispose of water in a non-erodible manner. See EC-9 Earth Dikes and Drainage Swales, EC-10, Velocity Dissipation Devices, and EC-11, Slope Drains.
- Utilize wet blankets or a similar method that maintains moisture while minimizing the use and possible discharge of water.

Costs

All of the above measures are generally low cost.

Inspection and Maintenance

- Inspect and verify that activity-based BMPs are in place prior to the commencement of associated activities. While activities associated with the BMP are under way, inspect weekly during the rainy season and at two-week intervals in the non-rainy season to verify continued BMP implementation.
- Inspect BMPs subject to non-stormwater discharges daily while non-stormwater discharges occur.
- Ensure that employees and subcontractors implement appropriate measures for storage, handling, and use of curing compounds.
- Inspect cure containers and spraying equipment for leaks.

References

Blue Print for a Clean Bay-Construction-Related Industries: Best Management Practices for Stormwater Pollution Prevention; Santa Clara Valley Non Point Source Pollution Control Program, 1992.

Stormwater Quality Handbooks - Construction Site Best Management Practices (BMPs) Manual, State of California Department of Transportation (Caltrans), November 2000.

Stormwater Management for Construction Activities, Developing Pollution Prevention Plans and Best Management Practices, EPA 832-R-92005; USEPA, April 1992.

Concrete Finishing NS-13

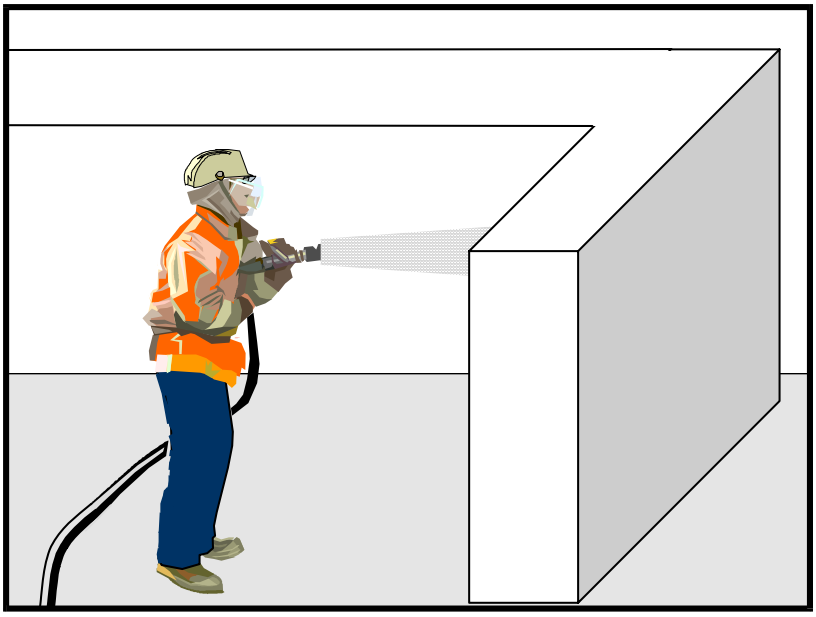

Objectives

EC	Erosion Control	
SE	Sediment Control	
TR	Tracking Control	
WE	Wind Erosion Control	
NS	Non-Stormwater Management Control	☑
WM	Waste Management and Materials Pollution Control	☑

Legend:

☑ **Primary Objective**

☒ **Secondary Objective**

Targeted Constituents

Sediment	☑
Nutrients	
Trash	
Metals	☑
Bacteria	
Oil and Grease	
Organics	☑

Potential Alternatives

None

Description and Purpose

Concrete finishing methods are used for bridge deck rehabilitation, paint removal, curing compound removal, and final surface finish appearances. Methods include sand blasting, shot blasting, grinding, or high pressure water blasting. Stormwater and non-stormwater exposed to concrete finishing by-products may have a high pH and may contain chemicals, metals, and fines. Proper procedures and implementation of appropriate BMPs can minimize the impact that concrete-finishing methods may have on stormwater and non-stormwater discharges.

Suitable Applications

These procedures apply to all construction locations where concrete finishing operations are performed.

Limitations

None identified.

Implementation

- Collect and properly dispose of water from high-pressure water blasting operations.
- Collect contaminated water from blasting operations at the top of slopes. Transport or dispose of contaminated water while using BMPs such as those for erosion control. Refer to EC-9, Earth Dikes and Drainage Swales, EC-10, Velocity Dissipation Devices, and EC-11, Slope Drains.

- Direct water from blasting operations away from inlets and watercourses to collection areas for infiltration or other means of removal (dewatering). Refer to NS-2 De-Watering Operations.
- Protect inlets during sandblasting operations. Refer to SE-10, Storm Drain Inlet Protection.
- Refer to WM-8, Concrete Waste Management for disposal of concrete based debris.
- Minimize the drift of dust and blast material as much as possible by keeping the blasting nozzle close to the surface.
- When blast residue contains a potentially hazardous waste, refer to WM-6, Hazardous Waste Management.

Costs

These measures are generally of low cost.

Inspection and Maintenance

- Inspect and verify that activity-based BMPs are in place prior to the commencement of associated activities. While activities associated with the BMP are under way, inspect weekly during the rainy season and at two-week intervals in the non-rainy season to verify continued BMP implementation.
- Inspect BMPs subject to non-stormwater discharges daily while non-stormwater discharges occur.
- Sweep or vacuum up debris from sandblasting at the end of each shift.
- At the end of each work shift, remove and contain liquid and solid waste from containment structures, if any, and from the general work area.

References

Blueprint for a Clean Bay: Best Management Practices to Prevent Stormwater Pollution from Construction Related Activities; Santa Clara Valley Nonpoint Source Pollution Control Program, 1995.

Stormwater Quality Handbooks - Construction Site Best Management Practices (BMPs) Manual, State of California Department of Transportation (Caltrans), November 2000.

Stormwater Management for Construction Activities, Developing Pollution Prevention Plans and Best Management Practices, EPA 832-R-92005; USEPA, April 1992.

Material Over Water NS-14

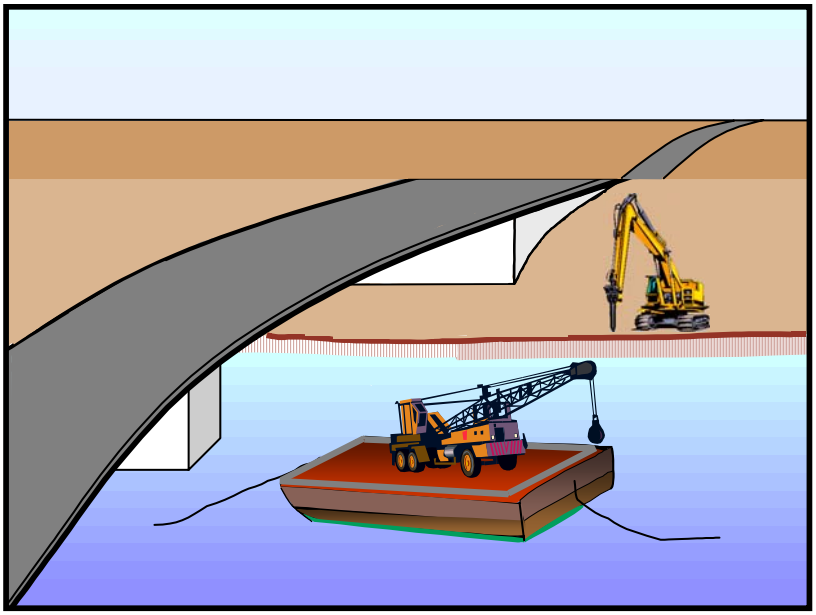

Objectives

EC	Erosion Control	
SE	Sediment Control	
TR	Tracking Control	
WE	Wind Erosion Control	
NS	Non-Stormwater Management Control	☑
WM	Waste Management and Materials Pollution Control	☑

Legend:

☑ **Primary Objective**

☒ **Secondary Objective**

Targeted Constituents

Sediment	☑
Nutrients	☑
Trash	☑
Metals	☑
Bacteria	☑
Oil and Grease	☑
Organics	☑

Potential Alternatives

None

Description and Purpose

Procedures for the proper use, storage, and disposal of materials and equipment on barges, boats, temporary construction pads, or similar locations, that minimize or eliminate the discharge of potential pollutants to a watercourse.

Suitable Applications

Applies where materials and equipment are used on barges, boats, docks, and other platforms over or adjacent to a watercourse including waters of the United States. These procedures should be implemented for construction materials and wastes (solid and liquid), soil or dredging materials, or any other materials that may cause or contribute to exceedances of water quality standards.

Limitations

Dredge and fill activities are regulated by the US Army Corps of Engineers and Regional Boards under Section 404/401 of the Clean Water Act.

Implementation

- Refer to WM-1, Material Delivery and Storage and WM-4, Spill Prevention and Control.
- Use drip pans and absorbent materials for equipment and vehicles and ensure that an adequate supply of spill clean up materials is available.
- Drip pans should be placed under all vehicles and equipment placed on docks, barges, or other structures over water bodies

when the vehicle or equipment is expected to be idle for more than 1 hour.

- Maintain equipment in accordance with NS-10, Vehicle and Equipment Maintenance. If a leaking line cannot be repaired, remove equipment from over the water.
- Provide watertight curbs or toe boards to contain spills and prevent materials, tools, and debris from leaving the barge, platform, dock, etc.
- Secure all materials to prevent discharges to receiving waters via wind.
- Identify types of spill control measures to be employed, including the storage of such materials and equipment. Ensure that staff is trained regarding the use of the materials, deployment and access of control measures, and reporting measures.
- In case of spills, contact the local Regional Board as soon as possible but within 48 hours.
- Refer to WM-5, Solid Waste Management (non-hazardous) and WM-6, Hazardous Waste Management. Ensure the timely and proper removal of accumulated wastes
- Comply with all necessary permits required for construction within or near the watercourse, such as Regional Water Quality Control Board, U.S. Army Corps of Engineers, Department of Fish and Game or and other local permitting.
- Discharges to waterways should be reported to the Regional Water Quality Control Board immediately upon discovery. A written discharge notification must follow within 7 days. Follow the spill reporting procedures contained in SWPPP.

Costs

These measures are generally of low to moderate cost. Exceptions are areas for temporary storage of materials, engine fluids, or wastewater pump out.

Inspection and Maintenance

- Inspect and verify that activity–based BMPs are in place prior to the commencement of associated activities. While activities associated with the BMP are under way, inspect weekly during the rainy season and of two-week intervals in the non-rainy season to verify continued BMP implementation.
- Inspect BMPs subject to non-stormwater discharge daily while non-stormwater discharges occur.
- Ensure that employees and subcontractors implement the appropriate measures for storage and use of materials and equipment.
- Inspect and maintain all associated BMPs and perimeter controls to ensure continuous protection of the water courses, including waters of the United States.

References

Stormwater Quality Handbooks - Construction Site Best Management Practices (BMPs) Manual, State of California Department of Transportation (Caltrans), November 2000.

Stormwater Management for Construction Activities, Developing Pollution Prevention Plans and Best Management Practices, EPA 832-R-92005; USEPA, April 1992.

Demolition Adjacent to Water NS-15

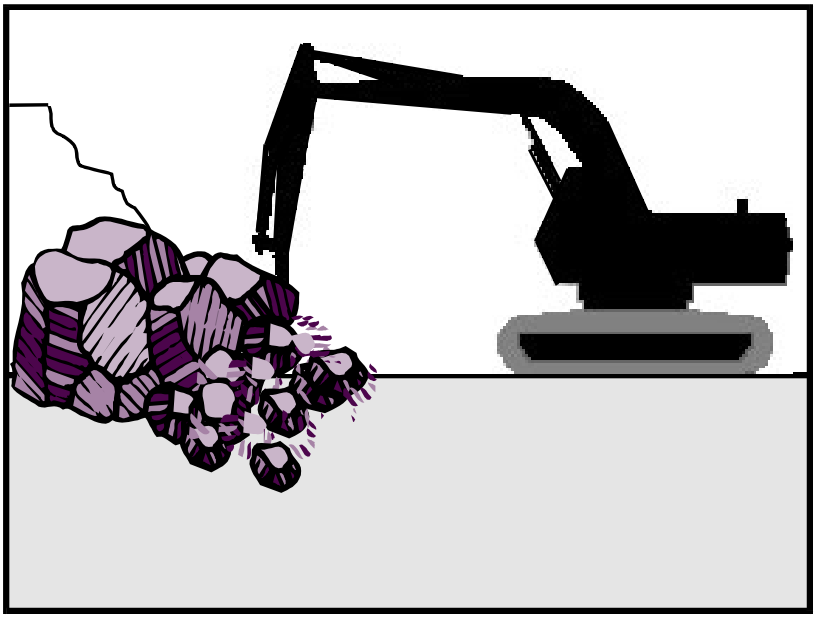

Objectives

EC	Erosion Control	
SE	Sediment Control	
TR	Tracking Control	
WE	Wind Erosion Control	
NS	Non-Stormwater Management Control	☑
WM	Waste Management and Materials Pollution Control	

Legend:

☑ **Primary Objective**

☒ **Secondary Objective**

Targeted Constituents

Sediment	☑
Nutrients	☑
Trash	☑
Metals	☑
Bacteria	☑
Oil and Grease	☑
Organics	☑

Potential Alternatives

None

Description and Purpose

Procedures to protect water bodies from debris and wastes associated with structure demolition or removal over or adjacent to watercourses.

Suitable Applications

Full bridge demolition and removal, partial bridge removal (barrier rail, edge of deck) associated with bridge widening projects, concrete channel removal, or any other structure removal that could potentially affect water quality.

Limitations

None identified.

Implementation

- Refer to NS-5, Clear Water Diversion, to direct water away from work areas.
- Use attachments on construction equipment such as backhoes to catch debris from small demolition operations.
- Use covers or platforms to collect debris.
- Platforms and covers are to be approved by the owner.
- Stockpile accumulated debris and waste generated during demolition away from watercourses and in accordance with WM-3, Stockpile Management.
- Ensure safe passage of wildlife, as necessary.

- Discharges to waterways shall be reported to the Regional Water Quality Control Board immediately upon discovery. A written discharge notification must follow within 7 days. Follow the spill reporting procedures in the SWPPP.

- For structures containing hazardous materials, i.e., lead paint or asbestos, refer to BMP WM-6, Hazardous Waste Management. For demolition work involving soil excavation around lead-painted structures, refer to WM-7, Contaminated Soil Management.

Costs

Cost may vary according to the combination of practices implemented.

Inspection and Maintenance

- Inspect and verify that activity–based BMPs are in place prior to the commencement of associated activities. While activities associated with the BMP are under way, inspect weekly during the rainy season and of two-week intervals in the non-rainy season to verify continued BMP implementation.

- Inspect BMPs subject to non-stormwater discharge daily while non-stormwater discharges occur.

- Any debris-catching devices shall be emptied regularly. Collected debris shall be removed and stored away from the watercourse and protected from runon and runoff.

References

Stormwater Quality Handbooks - Construction Site Best Management Practices (BMPs) Manual, State of California Department of Transportation (Caltrans), November 2000.

Stormwater Management for Construction Activities, Developing Pollution Prevention Plans and Best Management Practices, EPA 832-R-92005; USEPA, April 1992.

Temporary Batch Plants NS-16

Objectives

EC	Erosion Control	
SE	Sediment Control	
TR	Tracking Control	
WE	Wind Erosion Control	
NS	Non-Stormwater Management Control	☑
WM	Waste Management and Materials Pollution Control	

Legend:

☑ **Primary Objective**

☒ **Secondary Objective**

Targeted Constituents

Sediment	☑
Nutrients	
Trash	☑
Metals	☑
Bacteria	
Oil and Grease	
Organics	

Potential Alternatives

None

Description and Purpose

The construction of roads, bridges, retaining walls, and other large structures in remote areas, often requires temporary batch plant facilities to manufacture Portland Cement Concrete (PCC) or asphalt cement (AC). Temporary batch plant facilities typically consist of silos containing fly ash, lime, and cement; heated tanks of liquid asphalt; sand and gravel material storage areas; mixing equipment; above ground storage tanks containing concrete additives and water; and designated areas for sand and gravel truck unloading, concrete truck loading, and concrete truck washout. Proper control and use of equipment, materials, and waste products from temporary batch plant facilities will reduce the discharge of potential pollutants to the storm drain system or watercourses, reduce air emissions, and mitigate noise impacts.

Suitable Applications

These procedures typically apply to construction sites where temporary batch plant facilities are used.

Limitations

The General Permit for discharges of stormwater associated with industrial activities may be applicable to temporary batch plants.

Specific permit requirements or mitigation measures such as Air Resources Board (ARB), Air Quality Management District (AQMD), Air Pollution Control District (APCD), Regional Water Quality Control Board (RWQCB), county ordinances and city

ordinances may require alternative mitigation measures for temporary batch plants.

Implementation

Planning

Implementation steps are as follows:

- Temporary batch plants may be subject to the General Industrial NPDES permit. To comply with the permit, a Notice of Intent (NOI) must be submitted to the State Water Resource Control Board.
- Proper planning, design, and construction of temporary batch plants should be implemented to minimize potential water quality, air pollution, and noise impacts associated with temporary batch plants.
- BMPs and a Sampling and Analysis Plan (SAP) must be included in the project Stormwater Pollution Prevention Plan (SWPPP). BMPs must be implemented, inspected, and maintained.
- Temporary batch plants should be managed to comply with AQMD Statewide Registration Program and/or local AQMD Portable Equipment Registration requirements.
- Construct temporary batch plants down-wind of existing developments whenever possible.
- Placement of access roads should be planned to mitigate water and air quality impacts.

Layout and Design

- Temporary batch plants should be properly located and designed to mitigate water quality impacts to receiving water bodies. Batch plants should be located away from watercourses, drainage courses, and drain inlets. Batch plants should be located to minimize the potential for stormwater runon onto the site.
- Temporary batch plant facilities (including associated stationary equipment and stockpiles) should be located at least 300 ft from any recreational area, school, residence, or other structure not associated with the construction project.
- Construct continuous interior AC or PCC berms around batch plant equipment (mixing equipment, silos, concrete drop points, conveyor belts, admixture tanks, etc.) to facilitate proper containment and cleanup of releases. Rollover or flip top curb or dikes should be placed at ingress and egress points.
- Direct runoff from the paved or unpaved portion of the batch plant into a sump and pipe to a lined washout area or dewatering tank.
- Direct stormwater and non-stormwater runoff from unpaved portions of batch plant facility to catchment ponds or tanks.
- Construct and remove concrete washout facilities in accordance with WM-8, Concrete Waste Management.

- Layout of a typical batch plant and associated BMP is located at the end of this BMP fact sheet.

Operational Procedures

- Washout of concrete trucks should be conducted in a designated area in accordance with WM-8, Concrete Waste Management.
- Do not dispose of concrete into drain inlets, the stormwater drainage system, or watercourses.
- Equipment washing should occur in a designated area in accordance with WM-8, Concrete Waste Management. Washing equipment, tools, or vehicles to remove PCC shall be conducted in accordance with NS-7, Potable Water/Irrigation, and NS-8, Vehicle and Equipment Cleaning.
- All dry material transfer points should be ducted through a fabric or cartridge type filter unless there are no visible emissions from the transfer point.
- Equip all bulk storage silos, including auxiliary bulk storage trailers, with fabric or cartridge type filter(s).
- Maintain silo vent filters in proper operating condition.
- Equip silos and auxiliary bulk storage trailers with dust-tight service hatches.
- Fabric dust collection system should be capable of controlling 99 percent of the particulate matter.
- Fabric dust collectors (except for vent filters) should be equipped with an operational pressure differential gauge to measure the pressure drop across the filters.
- All transfer points should be equipped with a wet suppression system to control fugitive particulate emissions unless there are no visible emissions.
- All conveyors should be covered, unless the material being transferred results in no visible emissions.
- There should be no visible emissions beyond the property line, while the equipment is being operated.
- Collect dust emissions from the loading of open-bodied trucks at the drip point of dry batch plants, or dust emissions from the drum feed for central mix plants.
- Equip silos and auxiliary bulk storage trailers with a visible and/or audible warning mechanism to warn operators that the silo or trailer is full.
- All open-bodied vehicles transporting material should be loaded with a final layer of wet sand and the truck shall be covered with a tarp to reduce emissions.

NS-16 Temporary Batch Plants

Tracking Control

- Plant roads (batch truck and material delivery truck roads) and areas between stockpiles and conveyor hoppers should be stabilized (TR-2, Stabilized Construction Roadway), watered (WE-1, Wind Erosion Control), treated with dust-suppressant chemicals, or paved with a cohesive hard surface that can be repeatedly swept, maintained intact, and cleaned as necessary to control dust emissions.

- Trucks should not track PCC from plants onto public roads. Use appropriate practices from TR-1, Stabilized Construction Entrance/Exit to prevent tracking.

Materials Storage

- WM-1, Material Delivery and Storage, should be implemented at all batch plants using concrete components or compounds. An effective strategy is to cover and contain materials.

- WM-2, Material Use should be conducted in a way to minimize or eliminate the discharge of materials to storm drain system or watercourse.

- Ensure that finer materials are not dispersed into the air during operations, such as unloading of cement delivery trucks.

- Stockpiles should be covered and enclosed with perimeter sediment barriers per WM-3, Stockpile Management. Uncovered stockpiles should be sprinkled with water and/or dust-suppressant chemicals as necessary to control dust emissions, unless the stockpiled material results in no visible emissions. An operable stockpile watering system should be onsite at all times.

- Store bagged and boxed materials on pallets and cover on non-working days prior to rain.

- Minimize stockpiles of demolished PCC by recycling them in a timely manner.

- Provide secondary containment for liquid materials (WM-1). Containment should provide sufficient volume to contain precipitation from a 25-year storm plus 10% of the aggregate volume of all containers or plus 100% of the largest container, whichever is greater.

- Handle solid and liquid waste in accordance with WM-5, Solid Waste Management, WM-10, Liquid Waste Management, and WM-8, Concrete Waste Management.

- Maintain adequate supplies of spill cleanup materials and train staff to respond to spills per WM-4, Spill Prevention and Control.

- Immediately clean up spilled cement and fly ash and contain or dampen so that dust or emissions from wind erosion or vehicle traffic are minimized.

Equipment Maintenance

- Equipment should be maintained to prevent fluid leaks and spills per NS-9, Vehicle and Equipment Fueling, and NS-10, Vehicle and Equipment Maintenance.

- Maintain adequate supplies of spill cleanup materials and train staff to respond to spills per WM-4, Spill Prevention and Control.

- Incorporate other BMPs such as WM-5, Solid Waste Management, WM-6, Hazardous Waste Management, and WM-10, Liquid Waste Management.

Costs

Costs will vary depending on the size of the facility and combination of BMPs implemented.

Inspection and Maintenance

- Inspect and verify that activity–based BMPs are in place prior to the commencement of associated activities. While activities associated with the BMP are under way, inspect weekly during the rainy season and of two-week intervals in the non-rainy season to verify continued BMP implementation.
- Inspect BMPs subject to non-stormwater discharge daily while non-stormwater discharges occur.
- Inspect and repair equipment (for damaged hoses, fittings, and gaskets).
- Inspect and maintain Stabilized Construction Entrance/Exit (TR-1) as needed.
- Inspect and maintain stabilized haul roads as needed.
- Inspect and maintain materials and waste storage areas as needed.

References

Stormwater Quality Handbooks - Construction Site Best Management Practices (BMPs) Manual, State of California Department of Transportation (Caltrans), November 2000.

Stormwater Management for Construction Activities, Developing Pollution Prevention Plans and Best Management Practices, EPA 832-R-92005; USEPA, April 1992.

NS-16 Temporary Batch Plants

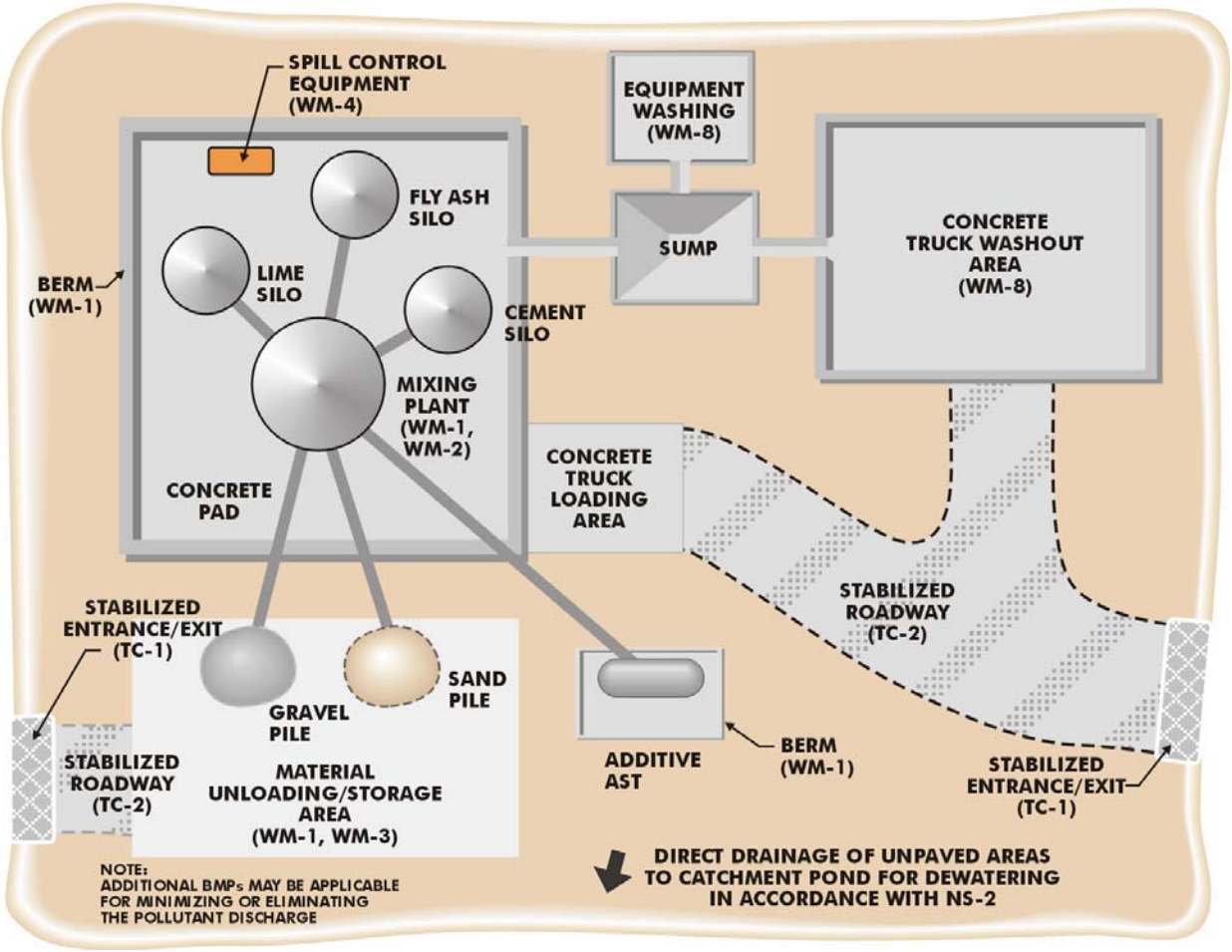

Typical Temporary Batch

Material Delivery and Storage WM-1

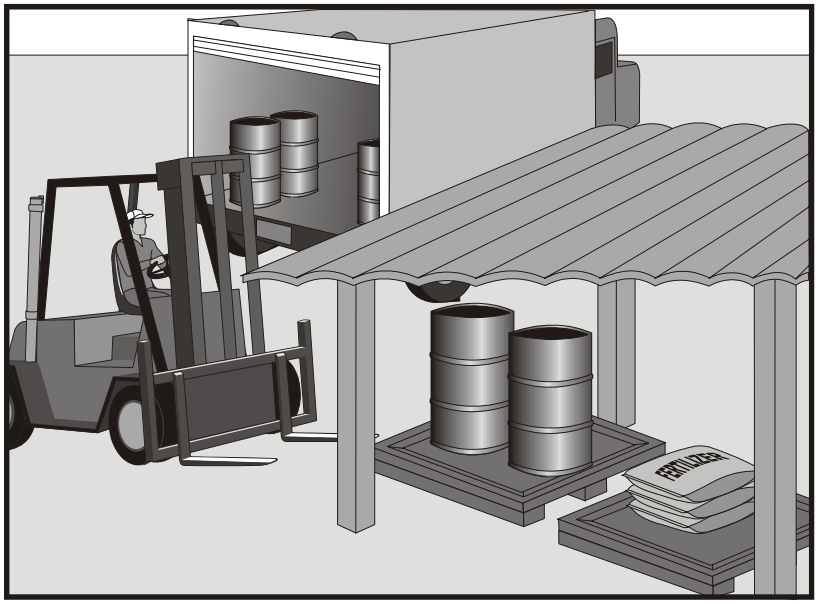

Objectives

EC	Erosion Control	
SE	Sediment Control	
TC	Tracking Control	
WE	Wind Erosion Control	
NS	Non-Stormwater Management Control	
WM	Waste Management and Materials Pollution Control	☑

Legend:

☑ **Primary Objective**

☒ **Secondary Objective**

Targeted Constituents

Sediment	☑
Nutrients	☑
Trash	☑
Metals	☑
Bacteria	
Oil and Grease	☑
Organics	☑

Potential Alternatives

None

Description and Purpose

Prevent, reduce, or eliminate the discharge of pollutants from material delivery and storage to the stormwater system or watercourses by minimizing the storage of hazardous materials onsite, storing materials in a designated area, installing secondary containment, conducting regular inspections, and training employees and subcontractors.

This best management practice covers only material delivery and storage. For other information on materials, see WM-2, Material Use, or WM-4, Spill Prevention and Control. For information on wastes, see the waste management BMPs in this section.

Suitable Applications

These procedures are suitable for use at all construction sites with delivery and storage of the following materials:

- Soil stabilizers and binders
- Pesticides and herbicides
- Fertilizers
- Detergents
- Plaster
- Petroleum products such as fuel, oil, and grease
- Asphalt and concrete components

- Hazardous chemicals such as acids, lime, glues, adhesives, paints, solvents, and curing compounds
- Concrete compounds
- Other materials that may be detrimental if released to the environment

Limitations

- Space limitation may preclude indoor storage.
- Storage sheds often must meet building and fire code requirements.

Implementation

The following steps should be taken to minimize risk:

- Temporary storage area should be located away from vehicular traffic.
- Material Safety Data Sheets (MSDS) should be supplied for all materials stored.
- Construction site areas should be designated for material delivery and storage.
- Material delivery and storage areas should be located near the construction entrances, away from waterways, if possible.
  - Avoid transport near drainage paths or waterways.
  - Surround with earth berms. See EC-9, Earth Dikes and Drainage Swales.
  - Place in an area which will be paved.
- Storage of reactive, ignitable, or flammable liquids must comply with the fire codes of your area. Contact the local Fire Marshal to review site materials, quantities, and proposed storage area to determine specific requirements. See the Flammable and Combustible Liquid Code, NFPA30.
- An up to date inventory of materials delivered and stored onsite should be kept.
- Hazardous materials storage onsite should be minimized.
- Hazardous materials should be handled as infrequently as possible.
- During the rainy season, consider storing materials in a covered area. Store materials in secondary containments such as earthen dike, horse trough, or even a children's wading pool for non-reactive materials such as detergents, oil, grease, and paints. Small amounts of material may be secondarily contained in "bus boy" trays or concrete mixing trays.
- Do not store chemicals, drums, or bagged materials directly on the ground. Place these items on a pallet and, when possible, in secondary containment.

- If drums must be kept uncovered, store them at a slight angle to reduce ponding of rainwater on the lids to reduce corrosion. Domed plastic covers are inexpensive and snap to the top of drums, preventing water from collecting.
- Chemicals should be kept in their original labeled containers.
- Employees and subcontractors should be trained on the proper material delivery and storage practices.
- Employees trained in emergency spill cleanup procedures must be present when dangerous materials or liquid chemicals are unloaded.
- If significant residual materials remain on the ground after construction is complete, properly remove materials and any contaminated soil. See WM-7, Contaminated Soil Management. If the area is to be paved, pave as soon as materials are removed to stabilize the soil.

Material Storage Areas and Practices

- Liquids, petroleum products, and substances listed in 40 CFR Parts 110, 117, or 302 should be stored in approved containers and drums and should not be overfilled. Containers and drums should be placed in temporary containment facilities for storage.
- A temporary containment facility should provide for a spill containment volume able to contain precipitation from a 25 year storm event, plus the greater of 10% of the aggregate volume of all containers or 100% of the capacity of the largest container within its boundary, whichever is greater.
- A temporary containment facility should be impervious to the materials stored therein for a minimum contact time of 72 hours.
- A temporary containment facility should be maintained free of accumulated rainwater and spills. In the event of spills or leaks, accumulated rainwater and spills should be collected and placed into drums. These liquids should be handled as a hazardous waste unless testing determines them to be non-hazardous. All collected liquids or non-hazardous liquids should be sent to an approved disposal site.
- Sufficient separation should be provided between stored containers to allow for spill cleanup and emergency response access.
- Incompatible materials, such as chlorine and ammonia, should not be stored in the same temporary containment facility.
- Throughout the rainy season, each temporary containment facility should be covered during non-working days, prior to, and during rain events.
- Materials should be stored in their original containers and the original product labels should be maintained in place in a legible condition. Damaged or otherwise illegible labels should be replaced immediately.

- Bagged and boxed materials should be stored on pallets and should not be allowed to accumulate on the ground. To provide protection from wind and rain throughout the rainy season, bagged and boxed materials should be covered during non-working days and prior to and during rain events.
- Stockpiles should be protected in accordance with WM-3, Stockpile Management.
- Materials should be stored indoors within existing structures or sheds when available.
- Proper storage instructions should be posted at all times in an open and conspicuous location.
- An ample supply of appropriate spill clean up material should be kept near storage areas.
- Also see WM-6, Hazardous Waste Management, for storing of hazardous materials.

Material Delivery Practices

- Keep an accurate, up-to-date inventory of material delivered and stored onsite.
- Arrange for employees trained in emergency spill cleanup procedures to be present when dangerous materials or liquid chemicals are unloaded.

Spill Cleanup

- Contain and clean up any spill immediately.
- Properly remove and dispose of any hazardous materials or contaminated soil if significant residual materials remain on the ground after construction is complete. See WM-7, Contaminated Soil Management.
- See WM-4, Spill Prevention and Control, for spills of chemicals and/or hazardous materials.

Cost

- The largest cost of implementation may be in the construction of a materials storage area that is covered and provides secondary containment.

Inspection and Maintenance

- Inspect and verify that activity–based BMPs are in place prior to the commencement of associated activities. While activities associated with the BMP are under way, inspect weekly during the rainy season and of two-week intervals in the non-rainy season to verify continued BMP implementation.
- Keep an ample supply of spill cleanup materials near the storage area.
- Keep storage areas clean, well organized, and equipped with ample cleanup supplies as appropriate for the materials being stored.
- Repair or replace perimeter controls, containment structures, covers, and liners as needed to maintain proper function.

References

Blueprint for a Clean Bay: Best Management Practices to Prevent Stormwater Pollution from Construction Related Activities; Santa Clara Valley Nonpoint Source Pollution Control Program, 1995.

Coastal Nonpoint Pollution Control Program: Program Development and Approval Guidance, Working Group Working Paper; USEPA, April 1992.

Stormwater Quality Handbooks - Construction Site Best Management Practices (BMPs) Manual, State of California Department of Transportation (Caltrans), November 2000.

Stormwater Management for Construction Activities; Developing Pollution Prevention Plans and Best Management Practice, EPA 832-R-92005; USEPA, April 1992.

Material Use WM-2

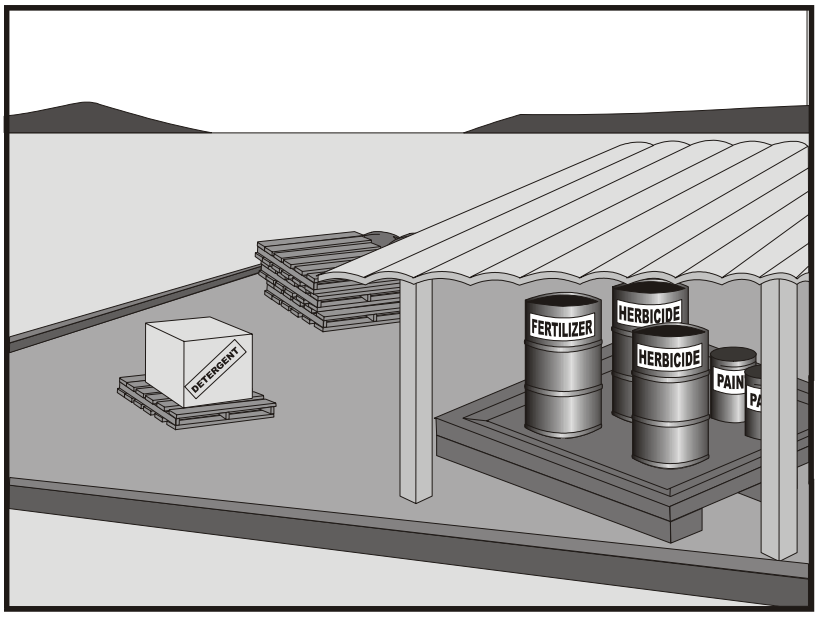

Objectives

EC	Erosion Control	
SE	Sediment Control	
TC	Tracking Control	
WE	Wind Erosion Control	
NS	Non-Stormwater Management Control	
WM	Waste Management and Materials Pollution Control	☑

Legend:

☑ **Primary Objective**

☒ **Secondary Objective**

Targeted Constituents

Sediment	☑
Nutrients	☑
Trash	☑
Metals	☑
Bacteria	
Oil and Grease	☑
Organics	☑

Potential Alternatives

None

Description and Purpose

Prevent or reduce the discharge of pollutants to the storm drain system or watercourses from material use by using alternative products, minimizing hazardous material use onsite, and training employees and subcontractors.

Suitable Applications

This BMP is suitable for use at all construction projects. These procedures apply when the following materials are used or prepared onsite:

- Pesticides and herbicides
- Fertilizers
- Detergents
- Plaster
- Petroleum products such as fuel, oil, and grease
- Asphalt and other concrete components
- Other hazardous chemicals such as acids, lime, glues, adhesives, paints, solvents, and curing compounds
- Concrete compounds
- Other materials that may be detrimental if released to the environment

Limitations

Safer alternative building and construction products may not be available or suitable in every instance.

Implementation

The following steps should be taken to minimize risk:

- Minimize use of hazardous materials onsite.
- Follow manufacturer instructions regarding uses, protective equipment, ventilation, flammability, and mixing of chemicals.
- Train personnel who use pesticides. The California Department of Pesticide Regulation and county agricultural commissioners license pesticide dealers, certify pesticide applicators, and conduct onsite inspections.
- Do not over-apply fertilizers, herbicides, and pesticides. Prepare only the amount needed. Follow the recommended usage instructions. Over-application is expensive and environmentally harmful. Unless on steep slopes, till fertilizers into the soil rather than hydro seeding. Apply surface dressings in several smaller applications, as opposed to one large application, to allow time for infiltration and to avoid excess material being carried offsite by runoff. Do not apply these chemicals just before it rains.
- Train employees and subcontractors in proper material use.
- Supply Material Safety Data Sheets (MSDS) for all materials.
- Dispose of latex paint and paint cans, used brushes, rags, absorbent materials, and drop cloths, when thoroughly dry and are no longer hazardous, with other construction debris.
- Do not remove the original product label; it contains important safety and disposal information. Use the entire product before disposing of the container.
- Mix paint indoors or in a containment area. Never clean paintbrushes or rinse paint containers into a street, gutter, storm drain, or watercourse. Dispose of any paint thinners, residue, and sludge(s) that cannot be recycled, as hazardous waste.
- For water-based paint, clean brushes to the extent practicable, and rinse to a drain leading to a sanitary sewer where permitted, or into a concrete washout pit or temporary sediment trap. For oil-based paints, clean brushes to the extent practicable, and filter and reuse thinners and solvents.
- Use recycled and less hazardous products when practical. Recycle residual paints, solvents, non-treated lumber, and other materials.
- Use materials only where and when needed to complete the construction activity. Use safer alternative materials as much as possible. Reduce or eliminate use of hazardous materials onsite when practical.

- Require contractors to complete the "Report of Chemical Spray Forms" when spraying herbicides and pesticides.
- Keep an ample supply of spill clean up material near use areas. Train employees in spill clean up procedures.
- Avoid exposing applied materials to rainfall and runoff unless sufficient time has been allowed for them to dry.

Costs

All of the above are low cost measures.

Inspection and Maintenance

- Inspect and verify that activity–based BMPs are in place prior to the commencement of associated activities. While activities associated with the BMP are under way, inspect weekly during the rainy season and at two–week intervals in the non-rainy season to verify continued BMP implementation.
- Maintenance of this best management practice is minimal.
- Spot check employees and subcontractors throughout the job to ensure appropriate practices are being employed.

References

Blueprint for a Clean Bay: Best Management Practices to Prevent Stormwater Pollution from Construction Related Activities; Santa Clara Valley Nonpoint Source Pollution Control Program, 1995.

Coastal Nonpoint Pollution Control Program: Program Development and Approval Guidance, Working Group Working Paper; USEPA, April 1992.

Stormwater Quality Handbooks - Construction Site Best Management Practices (BMPs) Manual, State of California Department of Transportation (Caltrans), November 2000.

Stormwater Management for Construction Activities; Developing Pollution Prevention Plans and Best Management Practice, EPA 832-R-92005; USEPA, April 1992.

Stockpile Management WM-3

Objectives

EC	Erosion Control	
SE	Sediment Control	
TC	Tracking Control	
WE	Wind Erosion Control	
NS	Non-Stormwater Management Control	
WM	Waste Management and Materials Pollution Control	☑

Legend:

☑ **Primary Objective**

☒ **Secondary Objective**

Targeted Constituents

Sediment	☑
Nutrients	☑
Trash	☑
Metals	☑
Bacteria	
Oil and Grease	☑
Organics	☑

Potential Alternatives

None

Description and Purpose

Stockpile Management procedures and practices are designed to reduce or eliminate air and stormwater pollution from stockpiles of soil, paving materials such as portland cement concrete (PCC) rubble, asphalt concrete (AC), asphalt concrete rubble, aggregate base, aggregate sub base or pre-mixed aggregate, asphalt minder (so called "cold mix" asphalt), and pressure treated wood.

Suitable Applications

Implement in all projects that stockpile soil and other materials.

Limitations

None identified.

Implementation

Protection of stockpiles is a year-round requirement. To properly manage stockpiles:

- Locate stockpiles a minimum of 50 ft away from concentrated flows of stormwater, drainage courses, and inlets.
- Protect all stockpiles from stormwater runon using a temporary perimeter sediment barrier such as berms, dikes, fiber rolls, silt fences, sandbag, gravel bags, or straw bale barriers.

- Implement wind erosion control practices as appropriate on all stockpiled material. For specific information, see WE-1, Wind Erosion Control.
- Manage stockpiles of contaminated soil in accordance with WM-7, Contaminated Soil Management.
- Place bagged materials on pallets and under cover.

Protection of Non-Active Stockpiles

Non-active stockpiles of the identified materials should be protected further as follows:

Soil stockpiles

- During the rainy season, soil stockpiles should be covered or protected with soil stabilization measures and a temporary perimeter sediment barrier at all times.
- During the non-rainy season, soil stockpiles should be covered or protected with a temporary perimeter sediment barrier prior to the onset of precipitation.

Stockpiles of Portland cement concrete rubble, asphalt concrete, asphalt concrete rubble, aggregate base, or aggregate sub base

- During the rainy season, the stockpiles should be covered or protected with a temporary perimeter sediment barrier at all times.
- During the non-rainy season, the stockpiles should be covered or protected with a temporary perimeter sediment barrier prior to the onset of precipitation.

Stockpiles of "cold mix"

- During the rainy season, cold mix stockpiles should be placed on and covered with plastic or comparable material at all times.
- During the non-rainy season, cold mix stockpiles should be placed on and covered with plastic or comparable material prior to the onset of precipitation.

Stockpiles/Storage of pressure treated wood with copper, chromium, and arsenic or ammonical, copper, zinc, and arsenate

- During the rainy season, treated wood should be covered with plastic or comparable material at all times.
- During the non-rainy season, treated wood should be covered with plastic or comparable material at all times and cold mix stockpiles should be placed on and covered with plastic or comparable material prior to the onset of precipitation.

Protection of Active Stockpiles

Active stockpiles of the identified materials should be protected further as follows:

- All stockpiles should be protected with a temporary linear sediment barrier prior to the onset of precipitation.
- Stockpiles of "cold mix" should be placed on and covered with plastic or comparable material prior to the onset of precipitation.

Costs

All of the above are low cost measures.

Inspection and Maintenance

- Inspect and verify that activity–based BMPs are in place prior to the commencement of associated activities. While activities associated with the BMP are under way, inspect weekly during the rainy season and of two-week intervals in the non-rainy season to verify continued BMP implementation

- Repair and/or replace perimeter controls and covers as needed to keep them functioning properly.

References

Stormwater Quality Handbooks - Construction Site Best Management Practices (BMPs) Manual, State of California Department of Transportation (Caltrans), November 2000.

Spill Prevention and Control WM-4

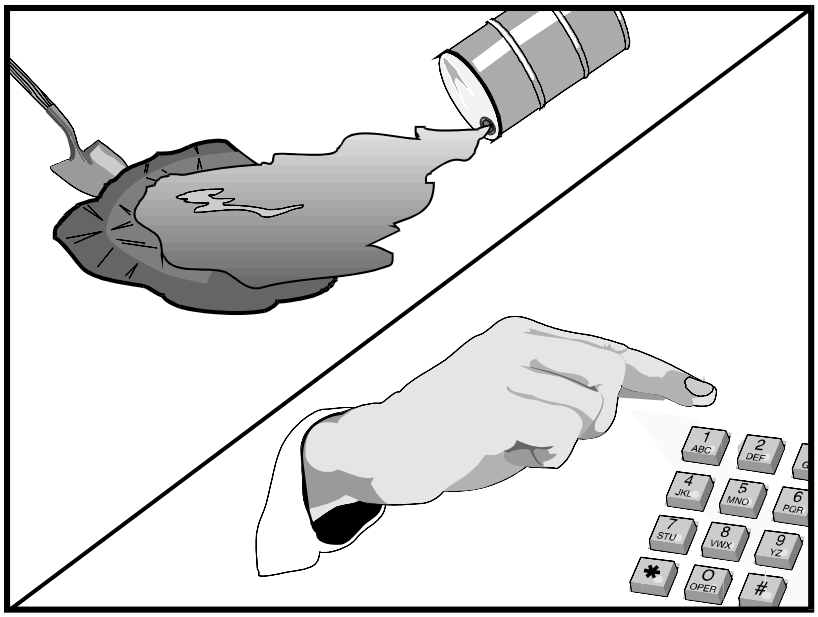

Objectives

EC	Erosion Control	
SE	Sediment Control	
TC	Tracking Control	
WE	Wind Erosion Control	
NS	Non-Stormwater Management Control	
WM	Waste Management and Materials Pollution Control	☑

Legend:

☑ **Primary Objective**

☒ **Secondary Objective**

Targeted Constituents

Sediment	☑
Nutrients	☑
Trash	☑
Metals	☑
Bacteria	
Oil and Grease	☑
Organics	☑

Potential Alternatives

None

Description and Purpose

Prevent or reduce the discharge of pollutants to drainage systems or watercourses from leaks and spills by reducing the chance for spills, stopping the source of spills, containing and cleaning up spills, properly disposing of spill materials, and training employees.

This best management practice covers only spill prevention and control. However, WM-1, Materials Delivery and Storage, and WM-2, Material Use, also contain useful information, particularly on spill prevention. For information on wastes, see the waste management BMPs in this section.

Suitable Applications

This BMP is suitable for all construction projects. Spill control procedures are implemented anytime chemicals or hazardous substances are stored on the construction site, including the following materials:

- Soil stabilizers/binders
- Dust palliatives
- Herbicides
- Growth inhibitors
- Fertilizers
- Deicing/anti-icing chemicals

- Fuels
- Lubricants
- Other petroleum distillates

Limitations

- In some cases it may be necessary to use a private spill cleanup company.
- This BMP applies to spills caused by the contractor and subcontractors.
- Procedures and practices presented in this BMP are general. Contractor should identify appropriate practices for the specific materials used or stored onsite

Implementation

The following steps will help reduce the stormwater impacts of leaks and spills:

Education

- Be aware that different materials pollute in different amounts. Make sure that each employee knows what a "significant spill" is for each material they use, and what is the appropriate response for "significant" and "insignificant" spills.
- Educate employees and subcontractors on potential dangers to humans and the environment from spills and leaks.
- Hold regular meetings to discuss and reinforce appropriate disposal procedures (incorporate into regular safety meetings).
- Establish a continuing education program to indoctrinate new employees.
- Have contractor's superintendent or representative oversee and enforce proper spill prevention and control measures.

General Measures

- To the extent that the work can be accomplished safely, spills of oil, petroleum products, substances listed under 40 CFR parts 110,117, and 302, and sanitary and septic wastes should be contained and cleaned up immediately.
- Store hazardous materials and wastes in covered containers and protect from vandalism.
- Place a stockpile of spill cleanup materials where it will be readily accessible.
- Train employees in spill prevention and cleanup.
- Designate responsible individuals to oversee and enforce control measures.
- Spills should be covered and protected from stormwater runon during rainfall to the extent that it doesn't compromise clean up activities.
- Do not bury or wash spills with water.

- Store and dispose of used clean up materials, contaminated materials, and recovered spill material that is no longer suitable for the intended purpose in conformance with the provisions in applicable BMPs.
- Do not allow water used for cleaning and decontamination to enter storm drains or watercourses. Collect and dispose of contaminated water in accordance with WM-10, Liquid Waste Management.
- Contain water overflow or minor water spillage and do not allow it to discharge into drainage facilities or watercourses.
- Place proper storage, cleanup, and spill reporting instructions for hazardous materials stored or used on the project site in an open, conspicuous, and accessible location.
- Keep waste storage areas clean, well organized, and equipped with ample cleanup supplies as appropriate for the materials being stored. Perimeter controls, containment structures, covers, and liners should be repaired or replaced as needed to maintain proper function.

Cleanup

- Clean up leaks and spills immediately.
- Use a rag for small spills on paved surfaces, a damp mop for general cleanup, and absorbent material for larger spills. If the spilled material is hazardous, then the used cleanup materials are also hazardous and must be sent to either a certified laundry (rags) or disposed of as hazardous waste.
- Never hose down or bury dry material spills. Clean up as much of the material as possible and dispose of properly. See the waste management BMPs in this section for specific information.

Minor Spills

- Minor spills typically involve small quantities of oil, gasoline, paint, etc. which can be controlled by the first responder at the discovery of the spill.
- Use absorbent materials on small spills rather than hosing down or burying the spill.
- Absorbent materials should be promptly removed and disposed of properly.
- Follow the practice below for a minor spill:
  - Contain the spread of the spill.
  - Recover spilled materials.
  - Clean the contaminated area and properly dispose of contaminated materials.

Semi-Significant Spills

- Semi-significant spills still can be controlled by the first responder along with the aid of other personnel such as laborers and the foreman, etc. This response may require the cessation of all other activities.

- Spills should be cleaned up immediately:
  - Contain spread of the spill.
  - Notify the project foreman immediately.
  - If the spill occurs on paved or impermeable surfaces, clean up using "dry" methods (absorbent materials, cat litter and/or rags). Contain the spill by encircling with absorbent materials and do not let the spill spread widely.
  - If the spill occurs in dirt areas, immediately contain the spill by constructing an earthen dike. Dig up and properly dispose of contaminated soil.
  - If the spill occurs during rain, cover spill with tarps or other material to prevent contaminating runoff.

Significant/Hazardous Spills

- For significant or hazardous spills that cannot be controlled by personnel in the immediate vicinity, the following steps should be taken:
  - Notify the local emergency response by dialing 911. In addition to 911, the contractor will notify the proper county officials. It is the contractor's responsibility to have all emergency phone numbers at the construction site.
  - Notify the Governor's Office of Emergency Services Warning Center, (916) 845-8911.
  - For spills of federal reportable quantities, in conformance with the requirements in 40 CFR parts 110,119, and 302, the contractor should notify the National Response Center at (800) 424-8802.
  - Notification should first be made by telephone and followed up with a written report.
  - The services of a spills contractor or a Haz-Mat team should be obtained immediately. Construction personnel should not attempt to clean up until the appropriate and qualified staffs have arrived at the job site.
  - Other agencies which may need to be consulted include, but are not limited to, the Fire Department, the Public Works Department, the Coast Guard, the Highway Patrol, the City/County Police Department, Department of Toxic Substances, California Division of Oil and Gas, Cal/OSHA, etc.

Reporting

- Report significant spills to local agencies, such as the Fire Department; they can assist in cleanup.
- Federal regulations require that any significant oil spill into a water body or onto an adjoining shoreline be reported to the National Response Center (NRC) at 800-424-8802 (24 hours).

Use the following measures related to specific activities:

Vehicle and Equipment Maintenance

- If maintenance must occur onsite, use a designated area and a secondary containment, located away from drainage courses, to prevent the runon of stormwater and the runoff of spills.
- Regularly inspect onsite vehicles and equipment for leaks and repair immediately
- Check incoming vehicles and equipment (including delivery trucks, and employee and subcontractor vehicles) for leaking oil and fluids. Do not allow leaking vehicles or equipment onsite.
- Always use secondary containment, such as a drain pan or drop cloth, to catch spills or leaks when removing or changing fluids.
- Place drip pans or absorbent materials under paving equipment when not in use.
- Use absorbent materials on small spills rather than hosing down or burying the spill. Remove the absorbent materials promptly and dispose of properly.
- Promptly transfer used fluids to the proper waste or recycling drums. Don't leave full drip pans or other open containers lying around
- Oil filters disposed of in trashcans or dumpsters can leak oil and pollute stormwater. Place the oil filter in a funnel over a waste oil-recycling drum to drain excess oil before disposal. Oil filters can also be recycled. Ask the oil supplier or recycler about recycling oil filters.
- Store cracked batteries in a non-leaking secondary container. Do this with all cracked batteries even if you think all the acid has drained out. If you drop a battery, treat it as if it is cracked. Put it into the containment area until you are sure it is not leaking.

Vehicle and Equipment Fueling

- If fueling must occur onsite, use designate areas, located away from drainage courses, to prevent the runon of stormwater and the runoff of spills.
- Discourage "topping off" of fuel tanks.
- Always use secondary containment, such as a drain pan, when fueling to catch spills/ leaks.

Costs

Prevention of leaks and spills is inexpensive. Treatment and/ or disposal of contaminated soil or water can be quite expensive.

Inspection and Maintenance

- Inspect and verify that activity–based BMPs are in place prior to the commencement of associated activities. While activities associated with the BMP are under way, inspect weekly during the rainy season and of two-week intervals in the non-rainy season to verify continued BMP implementation.
- Inspect BMPs subject to non-stormwater discharge daily while non-stormwater discharges occur.

- Keep ample supplies of spill control and cleanup materials onsite, near storage, unloading, and maintenance areas.
- Update your spill prevention and control plan and stock cleanup materials as changes occur in the types of chemicals onsite.

References

Blueprint for a Clean Bay: Best Management Practices to Prevent Stormwater Pollution from Construction Related Activities; Santa Clara Valley Nonpoint Source Pollution Control Program, 1995.

Stormwater Quality Handbooks - Construction Site Best Management Practices (BMPs) Manual, State of California Department of Transportation (Caltrans), November 2000.

Stormwater Management for Construction Activities; Developing Pollution Prevention Plans and Best Management Practice, EPA 832-R-92005; USEPA, April 1992.

Solid Waste Management WM-5

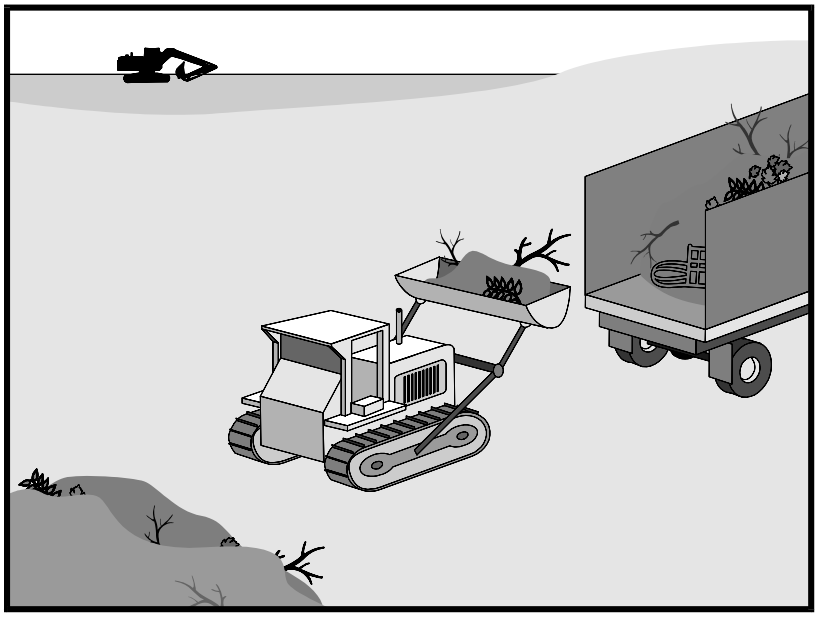

Objectives

EC	Erosion Control	
SE	Sediment Control	
TC	Tracking Control	
WE	Wind Erosion Control	
NS	Non-Stormwater Management Control	
WM	Waste Management and Materials Pollution Control	☑

Legend:

☑ **Primary Objective**

☒ **Secondary Objective**

Targeted Constituents

Sediment	☑
Nutrients	☑
Trash	☑
Metals	☑
Bacteria	
Oil and Grease	☑
Organics	☑

Potential Alternatives

None

Description and Purpose

Solid waste management procedures and practices are designed to prevent or reduce the discharge of pollutants to stormwater from solid or construction waste by providing designated waste collection areas and containers, arranging for regular disposal, and training employees and subcontractors.

Suitable Applications

This BMP is suitable for construction sites where the following wastes are generated or stored:

- Solid waste generated from trees and shrubs removed during land clearing, demolition of existing structures (rubble), and building construction
- Packaging materials including wood, paper, and plastic
- Scrap or surplus building materials including scrap metals, rubber, plastic, glass pieces and masonry products
- Domestic wastes including food containers such as beverage cans, coffee cups, paper bags, plastic wrappers, and cigarettes
- Construction wastes including brick, mortar, timber, steel and metal scraps, pipe and electrical cuttings, non-hazardous equipment parts, styrofoam and other materials used to transport and package construction materials

CASQA
CALIFORNIA STORMWATER QUALITY ASSOCIATION

- Highway planting wastes, including vegetative material, plant containers, and packaging materials

Limitations

Temporary stockpiling of certain construction wastes may not necessitate stringent drainage related controls during the non-rainy season or in desert areas with low rainfall.

Implementation

The following steps will help keep a clean site and reduce stormwater pollution:

- Select designated waste collection areas onsite.
- Inform trash-hauling contractors that you will accept only watertight dumpsters for onsite use. Inspect dumpsters for leaks and repair any dumpster that is not watertight.
- Locate containers in a covered area or in a secondary containment.
- Provide an adequate number of containers with lids or covers that can be placed over the container to keep rain out or to prevent loss of wastes when it is windy.
- Plan for additional containers and more frequent pickup during the demolition phase of construction.
- Collect site trash daily, especially during rainy and windy conditions.
- Remove this solid waste promptly since erosion and sediment control devices tend to collect litter.
- Make sure that toxic liquid wastes (used oils, solvents, and paints) and chemicals (acids, pesticides, additives, curing compounds) are not disposed of in dumpsters designated for construction debris.
- Do not hose out dumpsters on the construction site. Leave dumpster cleaning to the trash hauling contractor.
- Arrange for regular waste collection before containers overflow.
- Clean up immediately if a container does spill.
- Make sure that construction waste is collected, removed, and disposed of only at authorized disposal areas.

Education

- Have the contractor's superintendent or representative oversee and enforce proper solid waste management procedures and practices.
- Instruct employees and subcontractors on identification of solid waste and hazardous waste.
- Educate employees and subcontractors on solid waste storage and disposal procedures.

- Hold regular meetings to discuss and reinforce disposal procedures (incorporate into regular safety meetings).
- Require that employees and subcontractors follow solid waste handling and storage procedures.
- Prohibit littering by employees, subcontractors, and visitors.
- Minimize production of solid waste materials wherever possible.

Collection, Storage, and Disposal

- Littering on the project site should be prohibited.
- To prevent clogging of the storm drainage system, litter and debris removal from drainage grates, trash racks, and ditch lines should be a priority.
- Trash receptacles should be provided in the contractor's yard, field trailer areas, and at locations where workers congregate for lunch and break periods.
- Litter from work areas within the construction limits of the project site should be collected and placed in watertight dumpsters at least weekly, regardless of whether the litter was generated by the contractor, the public, or others. Collected litter and debris should not be placed in or next to drain inlets, stormwater drainage systems, or watercourses.
- Dumpsters of sufficient size and number should be provided to contain the solid waste generated by the project.
- Full dumpsters should be removed from the project site and the contents should be disposed of by the trash hauling contractor.
- Construction debris and waste should be removed from the site biweekly or more frequently as needed.
- Construction material visible to the public should be stored or stacked in an orderly manner.
- Stormwater runon should be prevented from contacting stored solid waste through the use of berms, dikes, or other temporary diversion structures or through the use of measures to elevate waste from site surfaces.
- Solid waste storage areas should be located at least 50 ft from drainage facilities and watercourses and should not be located in areas prone to flooding or ponding.
- Except during fair weather, construction and highway planting waste not stored in watertight dumpsters should be securely covered from wind and rain by covering the waste with tarps or plastic.
- Segregate potentially hazardous waste from non-hazardous construction site waste.
- Make sure that toxic liquid wastes (used oils, solvents, and paints) and chemicals (acids, pesticides, additives, curing compounds) are not disposed of in dumpsters designated for construction debris.

- For disposal of hazardous waste, see WM-6, Hazardous Waste Management. Have hazardous waste hauled to an appropriate disposal and/or recycling facility.

- Salvage or recycle useful vegetation debris, packaging and surplus building materials when practical. For example, trees and shrubs from land clearing can be used as a brush barrier, or converted into wood chips, then used as mulch on graded areas. Wood pallets, cardboard boxes, and construction scraps can also be recycled.

Costs

All of the above are low cost measures.

Inspection and Maintenance

- Inspect and verify that activity–based BMPs are in place prior to the commencement of associated activities. While activities associated with the BMP are under way, inspect weekly during the rainy season and of two-week intervals in the non-rainy season to verify continued BMP implementation.

- Inspect BMPs subject to non-stormwater discharge daily while non-stormwater discharges occur

- Inspect construction waste area regularly.

- Arrange for regular waste collection.

References

Processes, Procedures and Methods to Control Pollution Resulting from All Construction Activity, 430/9-73-007, USEPA, 1973.

Stormwater Quality Handbooks - Construction Site Best Management Practices (BMPs) Manual, State of California Department of Transportation (Caltrans), November 2000.

Stormwater Management for Construction Activities; Developing Pollution Prevention Plans and Best Management Practice, EPA 832-R-92005; USEPA, April 1992.

Hazardous Waste Management WM-6

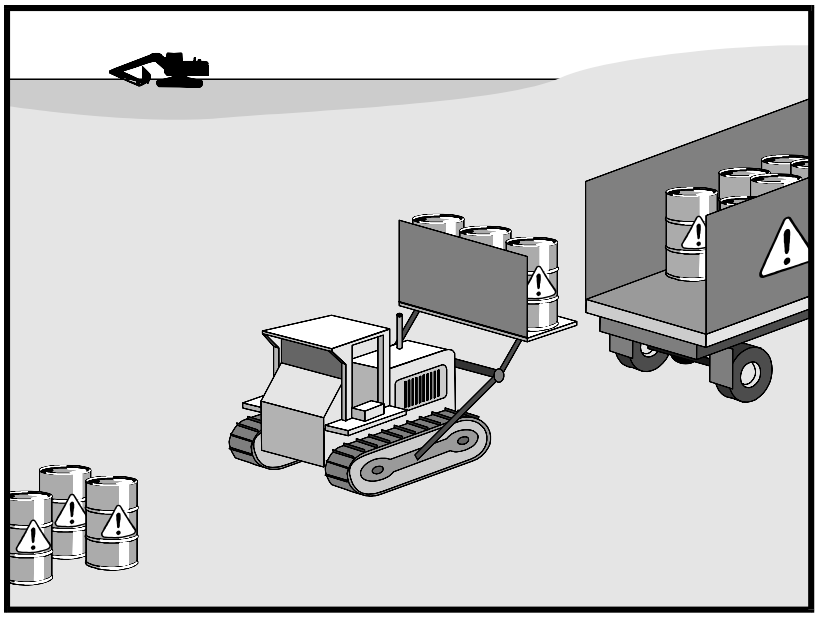

Objectives

EC	Erosion Control	
SE	Sediment Control	
TC	Tracking Control	
WE	Wind Erosion Control	
NS	Non-Stormwater Management Control	
WM	Waste Management and Materials Pollution Control	☑

Legend:

☑ **Primary Objective**

☒ **Secondary Objective**

Targeted Constituents

Sediment	
Nutrients	☑
Trash	☑
Metals	☑
Bacteria	☑
Oil and Grease	☑
Organics	☑

Potential Alternatives

None

Description and Purpose

Prevent or reduce the discharge of pollutants to stormwater from hazardous waste through proper material use, waste disposal, and training of employees and subcontractors.

Suitable Applications

This best management practice (BMP) applies to all construction projects. Hazardous waste management practices are implemented on construction projects that generate waste from the use of:

- Petroleum Products
- Concrete Curing Compounds
- Palliatives
- Septic Wastes
- Stains
- Wood Preservatives
- Asphalt Products
- Pesticides
- Acids
- Paints
- Solvents
- Roofing Tar
- Any materials deemed a hazardous waste in California, Title 22 Division 4.5, or listed in 40 CFR Parts 110, 117, 261, or 302

In addition, sites with existing structures may contain wastes, which must be disposed of in accordance with federal, state, and local regulations. These wastes include:

- Sandblasting grit mixed with lead-, cadmium-, or chromium-based paints
- Asbestos
- PCBs (particularly in older transformers)

Limitations

- Hazardous waste that cannot be reused or recycled must be disposed of by a licensed hazardous waste hauler.
- Nothing in this BMP relieves the contractor from responsibility for compliance with federal, state, and local laws regarding storage, handling, transportation, and disposal of hazardous wastes.
- This BMP does not cover aerially deposited lead (ADL) soils. For ADL soils refer to WM-7, Contaminated Soil Management.

Implementation

The following steps will help reduce stormwater pollution from hazardous wastes:

Material Use

- Wastes should be stored in sealed containers constructed of a suitable material and should be labeled as required by Title 22 CCR, Division 4.5 and 49 CFR Parts 172, 173, 178, and 179.
- All hazardous waste should be stored, transported, and disposed as required in Title 22 CCR, Division 4.5 and 49 CFR 261-263.
- Waste containers should be stored in temporary containment facilities that should comply with the following requirements:
  - Temporary containment facility should provide for a spill containment volume equal to 1.5 times the volume of all containers able to contain precipitation from a 25 year storm event, plus the greater of 10% of the aggregate volume of all containers or 100% of the capacity of the largest tank within its boundary, whichever is greater.
  - Temporary containment facility should be impervious to the materials stored there for a minimum contact time of 72 hours.
  - Temporary containment facilities should be maintained free of accumulated rainwater and spills. In the event of spills or leaks, accumulated rainwater and spills should be placed into drums after each rainfall. These liquids should be handled as a hazardous waste unless testing determines them to be non-hazardous. Non-hazardous liquids should be sent to an approved disposal site.
  - Sufficient separation should be provided between stored containers to allow for spill cleanup and emergency response access.

- Incompatible materials, such as chlorine and ammonia, should not be stored in the same temporary containment facility.
- Throughout the rainy season, temporary containment facilities should be covered during non-working days, and prior to rain events. Covered facilities may include use of plastic tarps for small facilities or constructed roofs with overhangs.

- Drums should not be overfilled and wastes should not be mixed.
- Unless watertight, containers of dry waste should be stored on pallets.
- Do not over-apply herbicides and pesticides. Prepare only the amount needed. Follow the recommended usage instructions. Over application is expensive and environmentally harmful. Apply surface dressings in several smaller applications, as opposed to one large application. Allow time for infiltration and avoid excess material being carried offsite by runoff. Do not apply these chemicals just before it rains. People applying pesticides must be certified in accordance with federal and state regulations.
- Paint brushes and equipment for water and oil based paints should be cleaned within a contained area and should not be allowed to contaminate site soils, watercourses, or drainage systems. Waste paints, thinners, solvents, residues, and sludges that cannot be recycled or reused should be disposed of as hazardous waste. When thoroughly dry, latex paint and paint cans, used brushes, rags, absorbent materials, and drop cloths should be disposed of as solid waste.
- Do not clean out brushes or rinse paint containers into the dirt, street, gutter, storm drain, or stream. “Paint out” brushes as much as possible. Rinse water-based paints to the sanitary sewer. Filter and reuse thinners and solvents. Dispose of excess oil-based paints and sludge as hazardous waste.
- The following actions should be taken with respect to temporary contaminant:
  - Ensure that adequate hazardous waste storage volume is available.
  - Ensure that hazardous waste collection containers are conveniently located.
  - Designate hazardous waste storage areas onsite away from storm drains or watercourses and away from moving vehicles and equipment to prevent accidental spills.
  - Minimize production or generation of hazardous materials and hazardous waste on the job site.
  - Use containment berms in fueling and maintenance areas and where the potential for spills is high.
  - Segregate potentially hazardous waste from non-hazardous construction site debris.
  - Keep liquid or semi-liquid hazardous waste in appropriate containers (closed drums or similar) and under cover.

- Clearly label all hazardous waste containers with the waste being stored and the date of accumulation.
- Place hazardous waste containers in secondary containment.
- Do not allow potentially hazardous waste materials to accumulate on the ground.
- Do not mix wastes.
- Use all of the product before disposing of the container.
- Do not remove the original product label; it contains important safety and disposal information.

Waste Recycling Disposal

- Select designated hazardous waste collection areas onsite.
- Hazardous materials and wastes should be stored in covered containers and protected from vandalism.
- Place hazardous waste containers in secondary containment.
- Do not mix wastes, this can cause chemical reactions, making recycling impossible and complicating disposal.
- Recycle any useful materials such as used oil or water-based paint.
- Make sure that toxic liquid wastes (used oils, solvents, and paints) and chemicals (acids, pesticides, additives, curing compounds) are not disposed of in dumpsters designated for construction debris.
- Arrange for regular waste collection before containers overflow.
- Make sure that hazardous waste (e.g., excess oil-based paint and sludge) is collected, removed, and disposed of only at authorized disposal areas.

Disposal Procedures

- Waste should be disposed of by a licensed hazardous waste transporter at an authorized and licensed disposal facility or recycling facility utilizing properly completed Uniform Hazardous Waste Manifest forms.
- A Department of Health Services certified laboratory should sample waste to determine the appropriate disposal facility.
- Properly dispose of rainwater in secondary containment that may have mixed with hazardous waste.
- Attention is directed to "Hazardous Material", "Contaminated Material", and "Aerially Deposited Lead" of the contract documents regarding the handling and disposal of hazardous materials.

Education

- Educate employees and subcontractors on hazardous waste storage and disposal procedures.
- Educate employees and subcontractors on potential dangers to humans and the environment from hazardous wastes.
- Instruct employees and subcontractors on safety procedures for common construction site hazardous wastes.
- Instruct employees and subcontractors in identification of hazardous and solid waste.
- Hold regular meetings to discuss and reinforce hazardous waste management procedures (incorporate into regular safety meetings).
- The contractor's superintendent or representative should oversee and enforce proper hazardous waste management procedures and practices.
- Make sure that hazardous waste is collected, removed, and disposed of only at authorized disposal areas.
- Warning signs should be placed in areas recently treated with chemicals.
- Place a stockpile of spill cleanup materials where it will be readily accessible.
- If a container does spill, clean up immediately.

Costs

All of the above are low cost measures.

Inspection and Maintenance

- Inspect and verify that activity–based BMPs are in place prior to the commencement of associated activities. While activities associated with the BMP are under way, inspect weekly during the rainy season and of two week intervals in the non-rainy season to verify continued BMP implementation.
- Inspect BMPs subject to non-stormwater discharge daily while non-stormwater discharges occur
- Hazardous waste should be regularly collected.
- A foreman or construction supervisor should monitor onsite hazardous waste storage and disposal procedures.
- Waste storage areas should be kept clean, well organized, and equipped with ample cleanup supplies as appropriate for the materials being stored.
- Perimeter controls, containment structures, covers, and liners should be repaired or replaced as needed to maintain proper function.
- Hazardous spills should be cleaned up and reported in conformance with the applicable Material Safety Data Sheet (MSDS) and the instructions posted at the project site.

- The National Response Center, at (800) 424-8802, should be notified of spills of federal reportable quantities in conformance with the requirements in 40 CFR parts 110, 117, and 302. Also notify the Governors Office of Emergency Services Warning Center at (916) 845-8911.

- A copy of the hazardous waste manifests should be provided.

References

Blueprint for a Clean Bay: Best Management Practices to Prevent Stormwater Pollution from Construction Related Activities; Santa Clara Valley Nonpoint Source Pollution Control Program, 1995.

Processes, Procedures and Methods to Control Pollution Resulting from All Construction Activity, 430/9-73-007, USEPA, 1973.

Stormwater Quality Handbooks - Construction Site Best Management Practices (BMPs) Manual, State of California Department of Transportation (Caltrans), November 2000.

Stormwater Management for Construction Activities; Developing Pollution Prevention Plans and Best Management Practice, EPA 832-R-92005; USEPA, April 1992.

Contaminated Soil Management WM-7

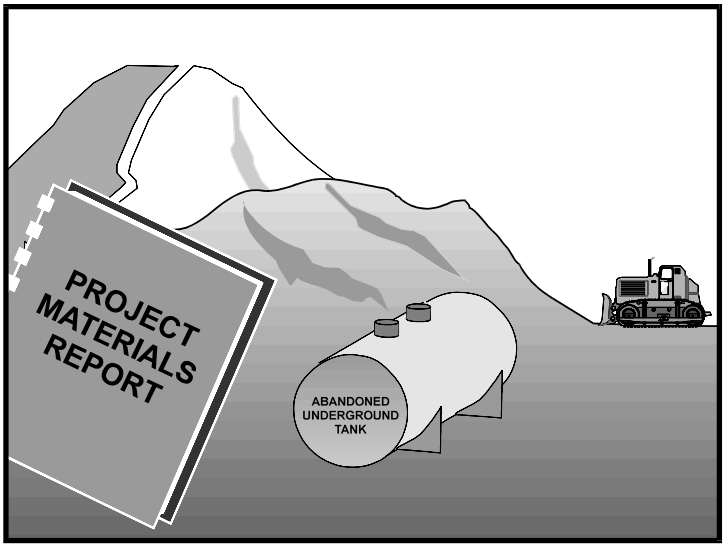

Objectives

EC	Erosion Control	
SE	Sediment Control	
TC	Tracking Control	
WE	Wind Erosion Control	
NS	Non-Stormwater Management Control	
WM	Waste Management and Materials Pollution Control	☑

Legend:

☑ **Primary Objective**

☒ **Secondary Objective**

Description and Purpose

Prevent or reduce the discharge of pollutants to stormwater from contaminated soil and highly acidic or alkaline soils by conducting pre-construction surveys, inspecting excavations regularly, and remediating contaminated soil promptly.

Suitable Applications

Contaminated soil management is implemented on construction projects in highly urbanized or industrial areas where soil contamination may have occurred due to spills, illicit discharges, aerial deposition, past use and leaks from underground storage tanks.

Limitations

Contaminated soils that cannot be treated onsite must be disposed of offsite by a licensed hazardous waste hauler. The presence of contaminated soil may indicate contaminated water as well. See NS-2, Dewatering Operations, for more information.

The procedures and practices presented in this BMP are general. The contractor should identify appropriate practices and procedures for the specific contaminants known to exist or discovered onsite.

Implementation

Most owners and developers conduct pre-construction environmental assessments as a matter of routine. Contaminated soils are often identified during project planning and development with known locations identified in the plans, specifications and in the SWPPP. The contractor should review applicable reports and investigate appropriate call-outs in the plans, specifications, and

Targeted Constituents

Sediment	
Nutrients	☑
Trash	☑
Metals	☑
Bacteria	☑
Oil and Grease	☑
Organics	☑

Potential Alternatives

None

CASQA
CALIFORNIA STORMWATER QUALITY ASSOCIATION

SWPPP. Recent court rulings holding contractors liable for cleanup costs when they unknowingly move contaminated soil highlight the need for contractors to confirm a site assessment is completed before earth moving begins.

The following steps will help reduce stormwater pollution from contaminated soil:

- Conduct thorough, pre-construction inspections of the site and review documents related to the site. If inspection or reviews indicated presence of contaminated soils, develop a plan before starting work.
- Look for contaminated soil as evidenced by discoloration, odors, differences in soil properties, abandoned underground tanks or pipes, or buried debris.
- Prevent leaks and spills. Contaminated soil can be expensive to treat and dispose of properly. However, addressing the problem before construction is much less expensive than after the structures are in place.
- The contractor may further identify contaminated soils by investigating:
  - Past site uses and activities
  - Detected or undetected spills and leaks
  - Acid or alkaline solutions from exposed soil or rock formations high in acid or alkaline forming elements
  - Contaminated soil as evidenced by discoloration, odors, differences in soil properties, abandoned underground tanks or pipes, or buried debris.
  - Suspected soils should be tested at a certified laboratory.

Education

- Have employees and subcontractors complete a safety training program which meets 29 CFR 1910.120 and 8 CCR 5192 covering the potential hazards as identified, prior to performing any excavation work at the locations containing material classified as hazardous.
- Educate employees and subcontractors in identification of contaminated soil and on contaminated soil handling and disposal procedures.
- Hold regular meetings to discuss and reinforce disposal procedures (incorporate into regular safety meetings).

Handling Procedures for Material with Aerially Deposited Lead (ADL)

- Materials from areas designated as containing (ADL) may, if allowed by the contract special provisions, be excavated, transported, and used in the construction of embankments and/or backfill.
- Excavation, transportation, and placement operations should result in no visible dust.
- Caution should be exercised to prevent spillage of lead containing material during transport.

- Quality should be monitored during excavation of soils contaminated with lead.

Handling Procedures for Contaminated Soils

- Minimize onsite storage. Contaminated soil should be disposed of properly in accordance with all applicable regulations. All hazardous waste storage will comply with the requirements in Title 22, CCR, Sections 66265.250 to 66265.260.
- Test suspected soils at an approved certified laboratory.
- Work with the local regulatory agencies to develop options for treatment or disposal if the soil is contaminated.
- Avoid temporary stockpiling of contaminated soils or hazardous material.
- Take the following precautions if temporary stockpiling is necessary:
  - Cover the stockpile with plastic sheeting or tarps.
  - Install a berm around the stockpile to prevent runoff from leaving the area.
  - Do not stockpile in or near storm drains or watercourses.
- Remove contaminated material and hazardous material on exteriors of transport vehicles and place either into the current transport vehicle or into the excavation prior to the vehicle leaving the exclusion zone.
- Monitor the air quality continuously during excavation operations at all locations containing hazardous material.
- Procure all permits and licenses, pay all charges and fees, and give all notices necessary and incident to the due and lawful prosecution of the work, including registration for transporting vehicles carrying the contaminated material and the hazardous material.
- Collect water from decontamination procedures and treat or dispose of it at an appropriate disposal site.
- Collect non-reusable protective equipment, once used by any personnel, and dispose of at an appropriate disposal site.
- Install temporary security fence to surround and secure the exclusion zone. Remove fencing when no longer needed.
- Excavate, transport, and dispose of contaminated material and hazardous material in accordance with the rules and regulations of the following agencies (the specifications of these agencies supersede the procedures outlined in this BMP):
  - United States Department of Transportation (USDOT)
  - United States Environmental Protection Agency (USEPA)
  - California Environmental Protection Agency (CAL-EPA)

- California Division of Occupation Safety and Health Administration (CAL-OSHA)
- Local regulatory agencies

Procedures for Underground Storage Tank Removals

- Prior to commencing tank removal operations, obtain the required underground storage tank removal permits and approval from the federal, state, and local agencies that have jurisdiction over such work.
- To determine if it contains hazardous substances, arrange to have tested, any liquid or sludge found in the underground tank prior to its removal.
- Following the tank removal, take soil samples beneath the excavated tank and perform analysis as required by the local agency representative(s).
- The underground storage tank, any liquid or sludge found within the tank, and all contaminated substances and hazardous substances removed during the tank removal and transported to disposal facilities permitted to accept such waste.

Water Control

- All necessary precautions and preventive measures should be taken to prevent the flow of water, including ground water, from mixing with hazardous substances or underground storage tank excavations. Such preventative measures may consist of, but are not limited to, berms, cofferdams, grout curtains, freeze walls, and seal course concrete or any combination thereof.
- If water does enter an excavation and becomes contaminated, such water, when necessary to proceed with the work, should be discharged to clean, closed top, watertight transportable holding tanks, treated, and disposed of in accordance with federal, state, and local laws.

Costs

Prevention of leaks and spills is inexpensive. Treatment or disposal of contaminated soil can be quite expensive.

Inspection and Maintenance

- Inspect and verify that activity–based BMPs are in place prior to the commencement of associated activities. While activities associated with the BMP are under way, inspect weekly during the rainy season and of two-week intervals in the non-rainy season to verify continued BMP implementation.
- Arrange for contractor's Water Pollution Control Manager, foreman, and/or construction supervisor to monitor onsite contaminated soil storage and disposal procedures.
- Monitor air quality continuously during excavation operations at all locations containing hazardous material.
- Coordinate contaminated soils and hazardous substances/waste management with the appropriate federal, state, and local agencies.

- Implement WM-4, Spill Prevention and Control, to prevent leaks and spills as much as possible.

References

Blueprint for a Clean Bay: Best Management Practices to Prevent Stormwater Pollution from Construction Related Activities; Santa Clara Valley Nonpoint Source Pollution Control Program, 1995.

Processes, Procedures and Methods to Control Pollution Resulting from All Construction Activity, 430/9-73-007, USEPA, 1973.

Stormwater Quality Handbooks - Construction Site Best Management Practices (BMPs) Manual, State of California Department of Transportation (Caltrans), November 2000.

Stormwater Management for Construction Activities; Developing Pollution Prevention Plans and Best Management Practice, EPA 832-R-92005; USEPA, April 1992.

Concrete Waste Management WM-8

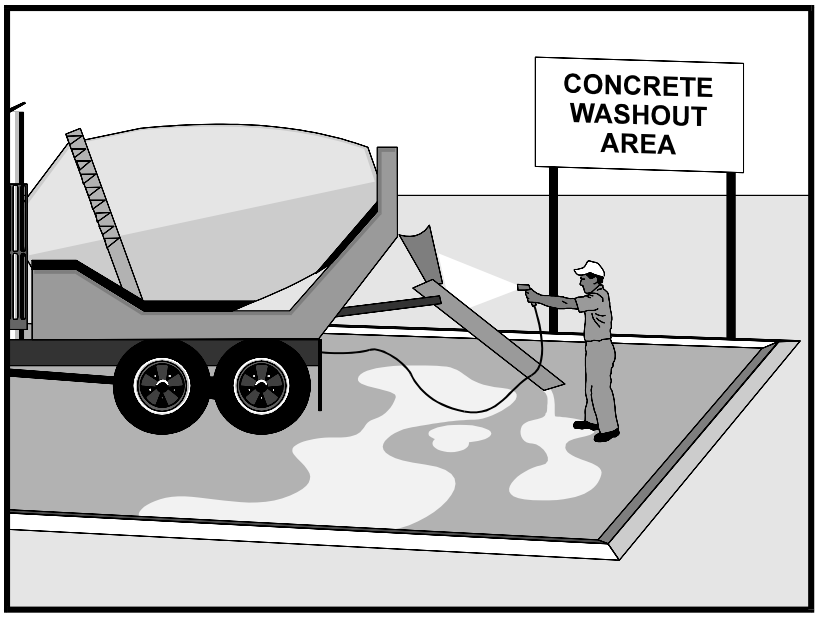

Objectives

EC	Erosion Control	
SE	Sediment Control	
TC	Tracking Control	
WE	Wind Erosion Control	
NS	Non-Stormwater Management Control	
WM	Waste Management and Materials Pollution Control	☑

Legend:

☑ **Primary Objective**

☒ **Secondary Objective**

Targeted Constituents

Sediment	☑
Nutrients	
Trash	
Metals	☑
Bacteria	
Oil and Grease	
Organics	

Potential Alternatives

None

Description and Purpose

Prevent or reduce the discharge of pollutants to stormwater from concrete waste by conducting washout offsite, performing onsite washout in a designated area, and training employee and subcontractors.

Suitable Applications

Concrete waste management procedures and practices are implemented on construction projects where:

- Concrete is used as a construction material or where concrete dust and debris result form demolition activities
- Slurries containing portland cement concrete (PCC) or asphalt concrete (AC) are generated, such as from saw cutting, coring, grinding, grooving, and hydro-concrete demolition
- Concrete trucks and other concrete-coated equipment are washed onsite
- Mortar-mixing stations exist
- See also NS-8, Vehicle and Equipment Cleaning

Limitations

- Offsite washout of concrete wastes may not always be possible.

Implementation

The following steps will help reduce stormwater pollution from concrete wastes:

- Discuss the concrete management techniques described in this BMP (such as handling of concrete waste and washout) with the ready-mix concrete supplier before any deliveries are made.
- Incorporate requirements for concrete waste management into material supplier and subcontractor agreements.
- Store dry and wet materials under cover, away from drainage areas.
- Avoid mixing excess amounts of fresh concrete.
- Perform washout of concrete trucks offsite or in designated areas only.
- Do not wash out concrete trucks into storm drains, open ditches, streets, or streams.
- Do not allow excess concrete to be dumped onsite, except in designated areas.
- For onsite washout:
  - Locate washout area at least 50 feet from storm drains, open ditches, or water bodies. Do not allow runoff from this area by constructing a temporary pit or bermed area large enough for liquid and solid waste.
  - Wash out wastes into the temporary pit where the concrete can set, be broken up, and then disposed properly.
- Avoid creating runoff by draining water to a bermed or level area when washing concrete to remove fine particles and expose the aggregate.
- Do not wash sweepings from exposed aggregate concrete into the street or storm drain. Collect and return sweepings to aggregate base stockpile or dispose in the trash.

Education

- Educate employees, subcontractors, and suppliers on the concrete waste management techniques described herein.
- Arrange for contractor's superintendent or representative to oversee and enforce concrete waste management procedures.

Concrete Slurry Wastes

- PCC and AC waste should not be allowed to enter storm drains or watercourses.
- PCC and AC waste should be collected and disposed of or placed in a temporary concrete washout facility.
- A sign should be installed adjacent to each temporary concrete washout facility to inform concrete equipment operators to utilize the proper facilities.

- Below grade concrete washout facilities are typical. Above grade facilities are used if excavation is not practical.
- A foreman or construction supervisor should monitor onsite concrete working tasks, such as saw cutting, coring, grinding and grooving to ensure proper methods are implemented.
- Saw-cut PCC slurry should not be allowed to enter storm drains or watercourses. Residue from grinding operations should be picked up by means of a vacuum attachment to the grinding machine. Saw cutting residue should not be allowed to flow across the pavement and should not be left on the surface of the pavement. See also NS-3, Paving and Grinding Operations; and WM-10, Liquid Waste Management.
- Slurry residue should be vacuumed and disposed in a temporary pit (as described in OnSite Temporary Concrete Washout Facility, Concrete Transit Truck Washout Procedures, below) and allowed to dry. Dispose of dry slurry residue in accordance with WM-5, Solid Waste Management.

Onsite Temporary Concrete Washout Facility, Transit Truck Washout Procedures

- Temporary concrete washout facilities should be located a minimum of 50 ft from storm drain inlets, open drainage facilities, and watercourses. Each facility should be located away from construction traffic or access areas to prevent disturbance or tracking.
- A sign should be installed adjacent to each washout facility to inform concrete equipment operators to utilize the proper facilities.
- Temporary concrete washout facilities should be constructed above grade or below grade at the option of the contractor. Temporary concrete washout facilities should be constructed and maintained in sufficient quantity and size to contain all liquid and concrete waste generated by washout operations.
- Temporary washout facilities should have a temporary pit or bermed areas of sufficient volume to completely contain all liquid and waste concrete materials generated during washout procedures.
- Washout of concrete trucks should be performed in designated areas only.
- Only concrete from mixer truck chutes should be washed into concrete wash out.
- Concrete washout from concrete pumper bins can be washed into concrete pumper trucks and discharged into designated washout area or properly disposed of offsite.
- Once concrete wastes are washed into the designated area and allowed to harden, the concrete should be broken up, removed, and disposed of per WM-5, Solid Waste Management. Dispose of hardened concrete on a regular basis.
- Temporary Concrete Washout Facility (Type Above Grade)
  - Temporary concrete washout facility (type above grade) should be constructed as shown on the details at the end of this BMP, with a recommended minimum length and

minimum width of 10 ft, but with sufficient quantity and volume to contain all liquid and concrete waste generated by washout operations.

- Straw bales, wood stakes, and sandbag materials should conform to the provisions in SE-9, Straw Bale Barrier.

- Plastic lining material should be a minimum of 10 mil in polyethylene sheeting and should be free of holes, tears, or other defects that compromise the impermeability of the material.

- Temporary Concrete Washout Facility (Type Below Grade)

  - Temporary concrete washout facilities (type below grade) should be constructed as shown on the details at the end of this BMP, with a recommended minimum length and minimum width of 10 ft. The quantity and volume should be sufficient to contain all liquid and concrete waste generated by washout operations.

  - Lath and flagging should be commercial type.

  - Plastic lining material should be a minimum of 10 mil polyethylene sheeting and should be free of holes, tears, or other defects that compromise the impermeability of the material.

Removal of Temporary Concrete Washout Facilities

- When temporary concrete washout facilities are no longer required for the work, the hardened concrete should be removed and disposed of. Materials used to construct temporary concrete washout facilities should be removed from the site of the work and disposed of.

- Holes, depressions or other ground disturbance caused by the removal of the temporary concrete washout facilities should be backfilled and repaired.

Costs

All of the above are low cost measures.

Inspection and Maintenance

- Inspect and verify that activity–based BMPs are in place prior to the commencement of associated activities. While activities associated with the BMP are under way, inspect weekly during the rainy season and of two-week intervals in the non-rainy season to verify continued BMP implementation.

- Temporary concrete washout facilities should be maintained to provide adequate holding capacity with a minimum freeboard of 4 in. for above grade facilities and 12 in. for below grade facilities. Maintaining temporary concrete washout facilities should include removing and disposing of hardened concrete and returning the facilities to a functional condition. Hardened concrete materials should be removed and disposed of.

- Washout facilities must be cleaned, or new facilities must be constructed and ready for use once the washout is 75% full.

References

Blueprint for a Clean Bay: Best Management Practices to Prevent Stormwater Pollution from Construction Related Activities; Santa Clara Valley Nonpoint Source Pollution Control Program, 1995.

Stormwater Quality Handbooks - Construction Site Best Management Practices (BMPs) Manual, State of California Department of Transportation (Caltrans), November 2000.

Stormwater Management for Construction Activities; Developing Pollution Prevention Plans and Best Management Practice, EPA 832-R-92005; USEPA, April 1992.

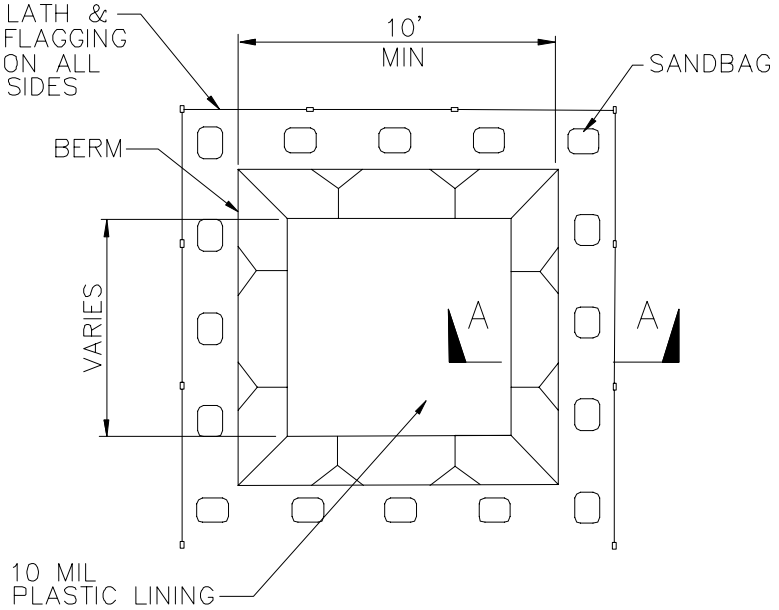

PLAN
NOT TO SCALE
TYPE "BELOW GRADE"

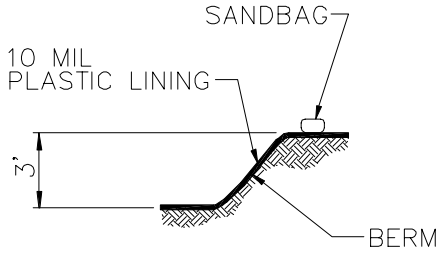

SECTION A–A
NOT TO SCALE

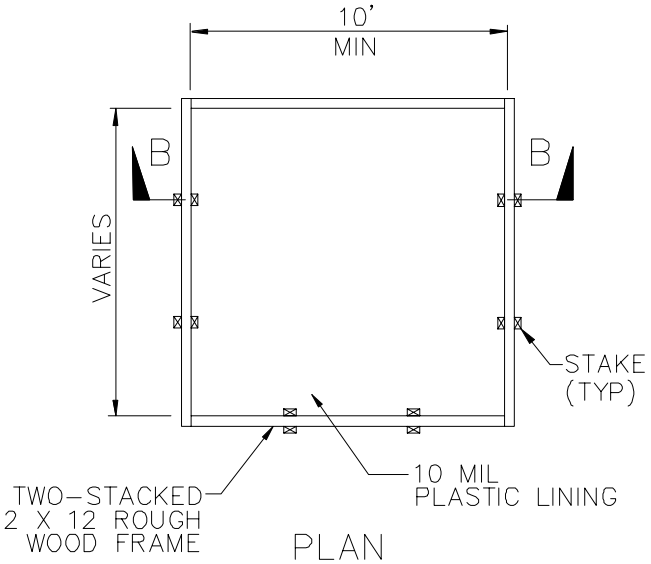

PLAN
NOT TO SCALE
TYPE "ABOVE GRADE"

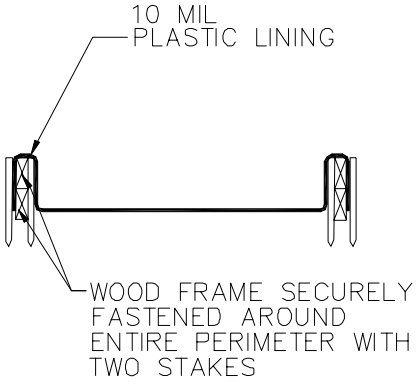

SECTION B–B
NOT TO SCALE

NOTES

1. ACTUAL LAYOUT DETERMINED IN FIELD.
2. THE CONCRETE WASHOUT SIGN SHALL BE INSTALLED WITHIN 30 FT. OF THE TEMPORARY CONCRETE WASHOUT FACILITY.

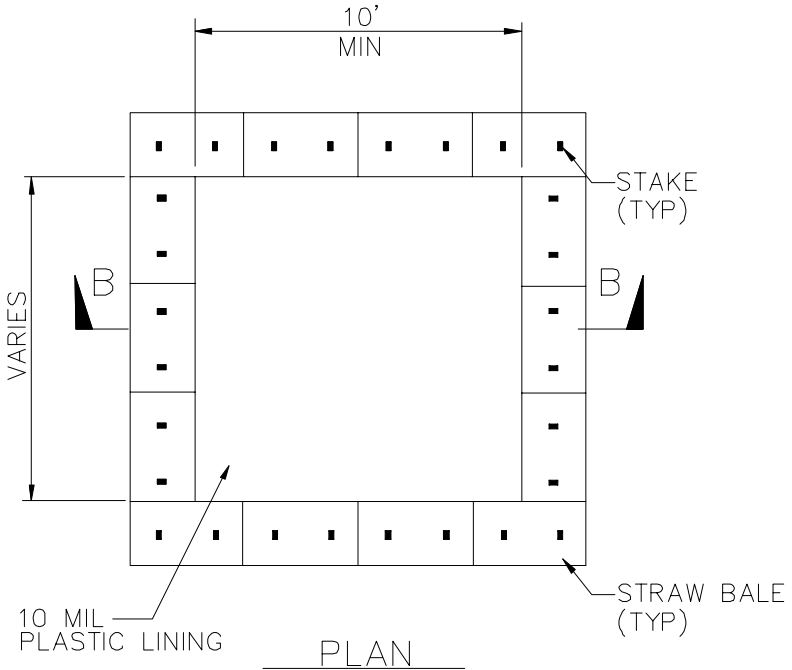

PLAN
NOT TO SCALE
TYPE "ABOVE GRADE"
WITH STRAW BALES

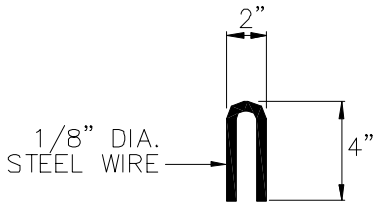

STAPLE DETAIL

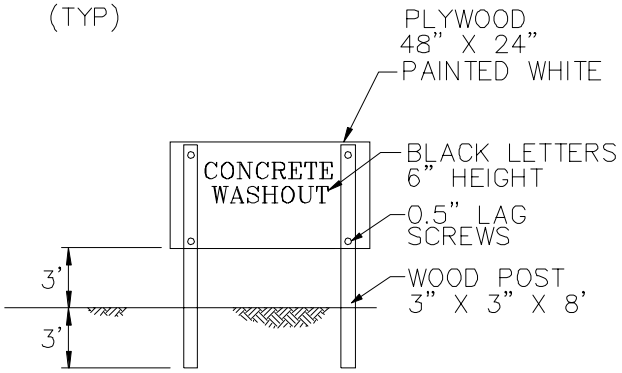

CONCRETE WASHOUT
SIGN DETAIL
(OR EQUIVALENT)

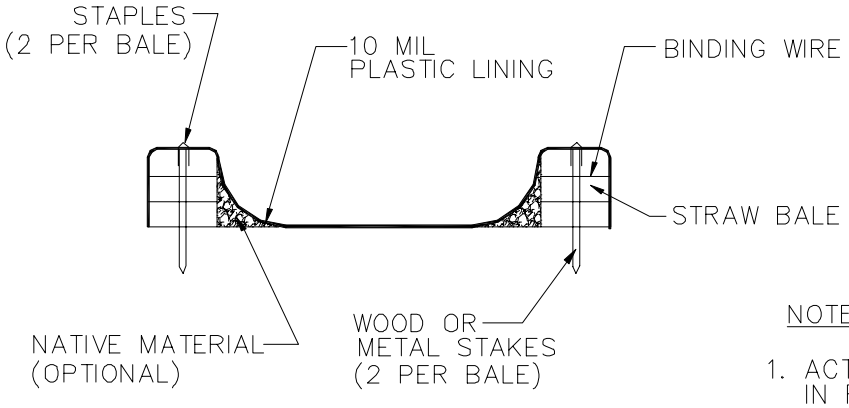

SECTION B–B
NOT TO SCALE

NOTES

1. ACTUAL LAYOUT DETERMINED IN FIELD.
2. THE CONCRETE WASHOUT SIGN SHALL BE INSTALLED WITHIN 30 FT. OF THE TEMPORARY CONCRETE WASHOUT FACILITY.

Sanitary/Septic Waste Management WM-9

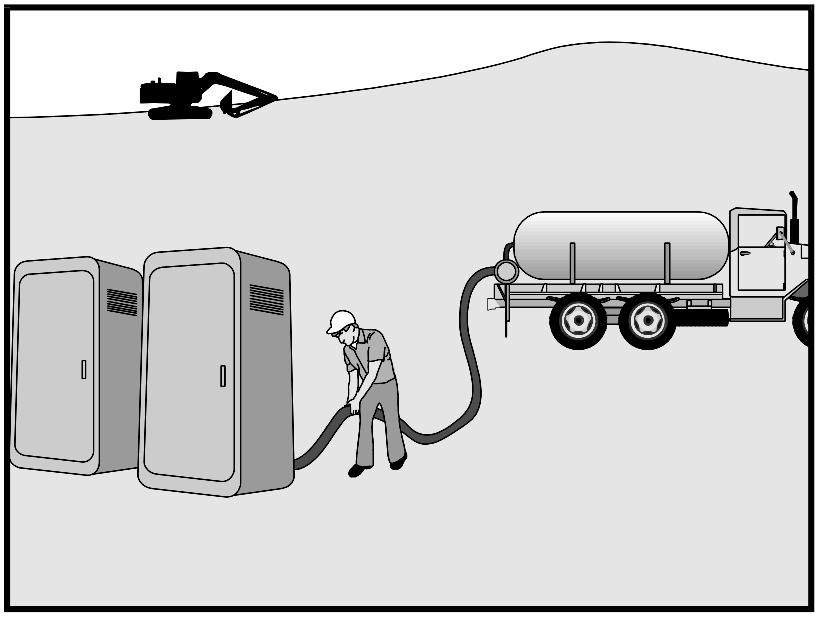

Objectives

EC	Erosion Control	
SE	Sediment Control	
TC	Tracking Control	
WE	Wind Erosion Control	
NS	Non-Stormwater Management Control	
WM	Waste Management and Materials Pollution Control	☑

Legend:

☑ **Primary Objective**

☒ **Secondary Objective**

Targeted Constituents

Sediment	
Nutrients	☑
Trash	☑
Metals	
Bacteria	☑
Oil and Grease	
Organics	☑

Potential Alternatives

None

Description and Purpose

Proper sanitary and septic waste management prevent the discharge of pollutants to stormwater from sanitary and septic waste by providing convenient, well-maintained facilities, and arranging for regular service and disposal.

Suitable Applications

Sanitary septic waste management practices are suitable for use at all construction sites that use temporary or portable sanitary and septic waste systems.

Limitations

None identified.

Implementation

Sanitary or septic wastes should be treated or disposed of in accordance with state and local requirements. In many cases, one contract with a local facility supplier will be all that it takes to make sure sanitary wastes are properly disposed.

Storage and Disposal Procedures

- Temporary sanitary facilities should be located away from drainage facilities, watercourses, and from traffic circulation. When subjected to high winds or risk of high winds, temporary sanitary facilities should be secured to prevent overturning.

- Wastewater should not be discharged or buried within the project site.

- Sanitary and septic systems that discharge directly into sanitary sewer systems, where permissible, should comply with the local health agency, city, county, and sewer district requirements.
- Only reputable, licensed sanitary and septic waste haulers should be used.
- Sanitary facilities should be located in a convenient location.
- Untreated raw wastewater should never be discharged or buried.
- Temporary septic systems should treat wastes to appropriate levels before discharging.
- If using an onsite disposal system (OSDS), such as a septic system, local health agency requirements must be followed.
- Temporary sanitary facilities that discharge to the sanitary sewer system should be properly connected to avoid illicit discharges.
- Sanitary and septic facilities should be maintained in good working order by a licensed service.
- Regular waste collection by a licensed hauler should be arranged before facilities overflow.

Education

- Educate employees, subcontractors, and suppliers on sanitary and septic waste storage and disposal procedures.
- Educate employees, subcontractors, and suppliers of potential dangers to humans and the environment from sanitary and septic wastes.
- Instruct employees, subcontractors, and suppliers in identification of sanitary and septic waste.
- Hold regular meetings to discuss and reinforce disposal procedures (incorporate into regular safety meetings).
- Establish a continuing education program to indoctrinate new employees.

Costs

All of the above are low cost measures.

Inspection and Maintenance

- Inspect and verify that activity–based BMPs are in place prior to the commencement of associated activities. While activities associated with the BMP are under way, inspect weekly during the rainy season and of two-week intervals in the non-rainy season to verify continued BMP implementation.
- Arrange for regular waste collection.
- If high winds are expected, portable sanitary facilities must be secured with spikes or weighed down to prevent over turning.

References

Stormwater Quality Handbooks - Construction Site Best Management Practices (BMPs) Manual, State of California Department of Transportation (Caltrans), November 2000.

Stormwater Management for Construction Activities; Developing Pollution Prevention Plans and Best Management Practice, EPA 832-R-92005; USEPA, April 1992.

Liquid Waste Management WM-10

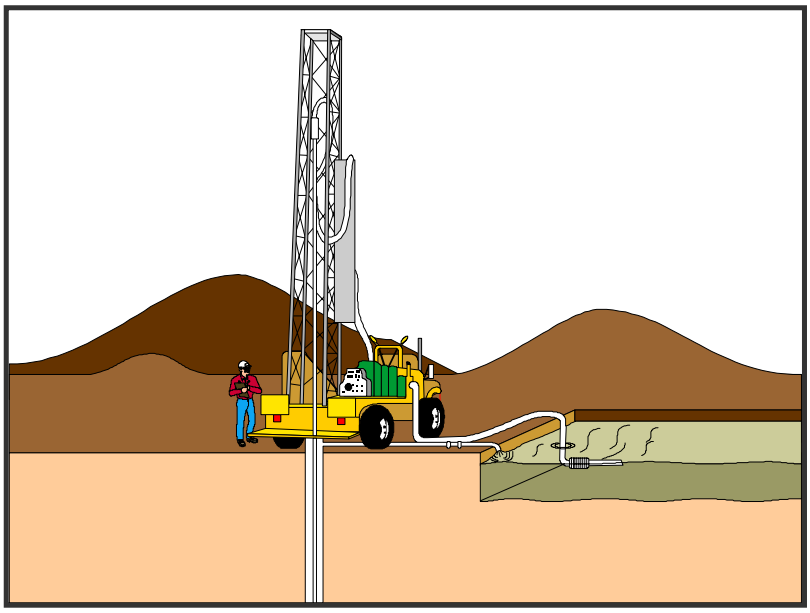

Objectives

EC	Erosion Control	
SE	Sediment Control	
TC	Tracking Control	
WE	Wind Erosion Control	
NS	Non-Stormwater Management Control	
WM	Waste Management and Materials Pollution Control	☑

Legend:

☑ **Primary Objective**

☒ **Secondary Objective**

Targeted Constituents

Sediment	☑
Nutrients	☑
Trash	☑
Metals	☑
Bacteria	
Oil and Grease	☑
Organics	

Potential Alternatives

None

Description and Purpose

Liquid waste management includes procedures and practices to prevent discharge of pollutants to the storm drain system or to watercourses as a result of the creation, collection, and disposal of non-hazardous liquid wastes.

Suitable Applications

Liquid waste management is applicable to construction projects that generate any of the following non-hazardous by-products, residuals, or wastes:

- Drilling slurries and drilling fluids
- Grease-free and oil-free wastewater and rinse water
- Dredgings
- Other non-stormwater liquid discharges not permitted by separate permits

Limitations

- Disposal of some liquid wastes may be subject to specific laws and regulations or to requirements of other permits secured for the construction project (e.g., NPDES permits, Army Corps permits, Coastal Commission permits, etc.).
- Liquid waste management does not apply to dewatering operations (NS-2 Dewatering Operations), solid waste management (WM-5, Solid Waste Management), hazardous

wastes (WM-6, Hazardous Waste Management), or concrete slurry residue (WM-8, Concrete Waste Management).

- Typical permitted non-stormwater discharges can include: water line flushing; landscape irrigation; diverted stream flows; rising ground waters; uncontaminated pumped ground water; discharges from potable water sources; foundation drains; irrigation water; springs; water from crawl space pumps; footing drains; lawn watering; flows from riparian habitats and wetlands; and discharges or flows from emergency fire fighting activities.

Implementation

General Practices

- Instruct employees and subcontractors how to safely differentiate between non-hazardous liquid waste and potential or known hazardous liquid waste.
- Instruct employees, subcontractors, and suppliers that it is unacceptable for any liquid waste to enter any storm drainage device, waterway, or receiving water.
- Educate employees and subcontractors on liquid waste generating activities and liquid waste storage and disposal procedures.
- Hold regular meetings to discuss and reinforce disposal procedures (incorporate into regular safety meetings).
- Verify which non-stormwater discharges are permitted by the statewide NPDES permit; different regions might have different requirements not outlined in this permit.
- Apply NS-8, Vehicle and Equipment Cleaning for managing wash water and rinse water from vehicle and equipment cleaning operations.

Containing Liquid Wastes

- Drilling residue and drilling fluids should not be allowed to enter storm drains and watercourses and should be disposed of.
- If an appropriate location is available, drilling residue and drilling fluids that are exempt under Title 23, CCR § 2511(g) may be dried by infiltration and evaporation in a containment facility constructed in conformance with the provisions concerning the Temporary Concrete Washout Facilities detailed in WM-8, Concrete Waste Management.
- Liquid wastes generated as part of an operational procedure, such as water-laden dredged material and drilling mud, should be contained and not allowed to flow into drainage channels or receiving waters prior to treatment.
- Liquid wastes should be contained in a controlled area such as a holding pit, sediment basin, roll-off bin, or portable tank.
- Containment devices must be structurally sound and leak free.
- Containment devices must be of sufficient quantity or volume to completely contain the liquid wastes generated.

- Precautions should be taken to avoid spills or accidental releases of contained liquid wastes. Apply the education measures and spill response procedures outlined in WM-4, Spill Prevention and Control.

- Containment areas or devices should not be located where accidental release of the contained liquid can threaten health or safety or discharge to water bodies, channels, or storm drains.

Capturing Liquid Wastes

- Capture all liquid wastes that have the potential to affect the storm drainage system (such as wash water and rinse water from cleaning walls or pavement), before they run off a surface.

- Do not allow liquid wastes to flow or discharge uncontrolled. Use temporary dikes or berms to intercept flows and direct them to a containment area or device for capture.

- Use a sediment trap (SE-3, Sediment Trap) for capturing and treating sediment laden liquid waste or capture in a containment device and allow sediment to settle.

Disposing of Liquid Wastes

- A typical method to handle liquid waste is to dewater the contained liquid waste, using procedures such as described in NS-2, Dewatering Operations, and SE-2, Sediment Basin, and dispose of resulting solids per WM-5, Solid Waste Management.

- Methods of disposal for some liquid wastes may be prescribed in Water Quality Reports, NPDES permits, Environmental Impact Reports, 401 or 404 permits, and local agency discharge permits, etc. Review the SWPPP to see if disposal methods are identified.

- Liquid wastes, such as from dredged material, may require testing and certification whether it is hazardous or not before a disposal method can be determined.

- For disposal of hazardous waste, see WM-6, Hazardous Waste Management.

- If necessary, further treat liquid wastes prior to disposal. Treatment may include, though is not limited to, sedimentation, filtration, and chemical neutralization.

Costs

Prevention costs for liquid waste management are minimal. Costs increase if cleanup or fines are involved.

Inspection and Maintenance

- Inspect and verify that activity–based BMPs are in place prior to the commencement of associated activities. While activities associated with the BMP are under way, inspect weekly during the rainy season and of two-week intervals in the non-rainy season to verify continued BMP implementation.

- Inspect BMPs subject to non-stormwater discharge daily while non-stormwater discharges occur.

- Remove deposited solids in containment areas and capturing devices as needed and at the completion of the task. Dispose of any solids as described in WM-5, Solid Waste Management.
- Inspect containment areas and capturing devices and repair as needed.

References

Stormwater Quality Handbooks - Construction Site Best Management Practices (BMPs) Manual, State of California Department of Transportation (Caltrans), November 2000.

Section 5
Glossary and List of Acronyms
5.1 Glossary

303(d) Listed: Water bodies listed as impaired as per Section 303(d) of the 1972 Clean Water Act.

Best Management Practices (BMPs): Includes schedules of activities, prohibitions of practices, maintenance procedures, and other management practices to prevent, eliminate, or reduce the pollution of waters of the receiving waters. BMPs also include treatment requirements, operating procedures, and practices to control plant site runoff spillage or leaks, sludge or waste disposal, or drainage from raw material storage.

Catch Basin (Also known as Inlet): Box-like underground concrete structure with openings in curbs and gutters designed to collect runoff from streets and pavement.

Clean Water Act (CWA): (33 U.S.C. 1251 et seq.) requirements of the NPDES program are defined under Sections 307, 402, 318 and 405 of the CWA.

Construction Activity: Includes clearing, grading, excavation, and contractor activities that result in soil disturbance.

Construction General Permit: A National Pollutant Discharge Elimination System (NPDES) permit issued by the State Water Resources Control Board for the discharge of stormwater associated with construction activity from soil disturbance of five acres or more. Threshold lowered to one acre beginning October 10, 2003. Construction General Permit No. CAS000002.

Denuded: Land stripped of vegetation or land that has had its vegetation worn down due to the impacts from the elements or humans.

Detention: The capture and subsequent release of stormwater runoff from the site at a slower rate than it is collected, the difference being held in temporary storage.

Discharge: A release or flow of stormwater or other substance from a conveyance system or storage container. Broader – includes release to storm drains, etc.

Effluent Limits: Limitations on amounts of pollutants that may be contained in a discharge. Can be expressed in a number of ways including as a concentration, as a concentration over a time period (e.g., 30-day average must be less than 20 mg/l), or as a total mass per time unit, or as a narrative limit.

Erosion: The wearing away of land surface by wind or water. Erosion occurs naturally from weather or runoff but can be intensified by land-clearing practices related to farming, new development, redevelopment, road building, or timber cutting.

Facility: Is a collection of industrial processes discharging stormwater associated with industrial activity within the property boundary or operational unit.

Grading: The cutting or filling of the land surface to a desired slope or elevation.

Hazardous Waste: A waste or combination of wastes that, because of its quantity, concentration, or physical, chemical or infectious characteristics, may either cause or significantly contribute to an increase in mortality or an increase in serious irreversible illness; or pose a substantial present or potential hazard to human health or the environment when improperly treated, stored, transported, disposed of or otherwise managed. Possesses at least one of four characteristics (ignitability, corrosivity, reactivity, or toxicity) or appears on special EPA or state lists. Regulated under the federal Resource Conservation and Recovery Act and the California Health and Safety Code.

Illicit Discharges: Any discharge to a municipal separate storm sewer that is not in compliance with applicable laws and regulations as discussed in this document.

Industrial General Permit: A National Pollutant Discharge Elimination System (NPDES) Permit (No. CAS000001) issued by the State Water Resources Control Board for discharge of stormwater associated with industrial activity. Board Order 97-03-DWQ.

Inlet: An entrance into a ditch, storm drain, or other waterway.

Integrated Pest Management (IPM): An ecosystem-based strategy that focuses on long-term prevention of pests or their damage through a combination of techniques such as biological control, habitat manipulation, modification of cultural practices, and use of resistant varieties. Pesticides are used only after monitoring indicates they are needed according to established guidelines, and treatments are made with the goal of removing only the target organism.

Municipal Separate Storm Sewer System (MS4): A conveyance or system of conveyances (including roads with drainage systems, municipal streets, catch basins, curbs, gutters, ditches, man-made channels, or storm drains): (i) designed or used for collecting or conveying storm water; (ii) which is not a combined sewer; and (iii) which is not part of a Publicly Owned Treatment Works (POTW) as defined at Title 40 of the Code of Federal Regulations (CFR) 122.2. A “Small MS4” is defined as an MS4 that is not a permitted MS4 under the Phase I regulations. This definition of a Small MS4 applies to MS4 operated within cities and counties as well as governmental facilities that have a system of storm sewers.

Non-Stormwater Discharge: Any discharge to municipal separate storm sewer that is not composed entirely of stormwater.

Nonpoint Source Pollution: Pollution that does not come from a point source. Nonpoint source pollution originates from aerial diffuse sources that are mostly related to land use.

Notice of Intent (NOI): A formal notice to SWRCB submitted by the owner of an industrial site or construction site that said owner seeks coverage under a General Permit for discharges associated with industrial and construction activities. The NOI provides information on the

owner, location, type of project, and certifies that the owner will comply with the conditions of the construction General Permit.

Notice of Termination (NOT): Formal notice to SWRCB submitted by owner/ developer that a construction project is complete.

NPDES Permit: NPDES is an acronym for National Pollutant Discharge Elimination System. NPDES is the national program for administering and regulating Sections 307, 318, 402, and 405 of the Clean Water Act (CWA). In California, the State Water Resources Control Board (SWRCB) has issued a General Permit for stormwater discharges associated with industrial activities (see Appendix A).

Outfall: The end point where storm drains discharge water into a waterway.

Point Source: Any discernible, confined, and discrete conveyance from which pollutants are or may be discharged. This term does not include return flows from irrigated agriculture or agricultural stormwater runoff.

Pollutant: Generally, any substance introduced into the environment that adversely affects the usefulness of a resource.

Pollution Prevention (P2): Practices and actions that reduce or eliminate the generation of pollutants.

Precipitation: Any form of rain or snow.

Pretreatment: Treatment of waste stream before it is discharged to a collection system.

Reclaim (water reclamation): Planned use of treated effluent that would otherwise be discharged without being put to direct use.

Retention: The storage of stormwater to prevent it from leaving the development site.

Reuse (water reuse): (see Reclaim)

Runoff: Water originating from rainfall, melted snow, and other sources (e.g., sprinkler irrigation) that flows over the land surface to drainage facilities, rivers, streams, springs, seeps, ponds, lakes, and wetlands.

Run-on: Off site stormwater surface flow or other surface flow which enters your site.

Scour: The erosive and digging action in a watercourse caused by flowing water.

Secondary Containment: Structures, usually dikes or berms, surrounding tanks or other storage containers, designed to catch spilled materials from the storage containers.

Sedimentation: The process of depositing soil particles, clays, sands, or other sediments that were picked up by runoff.

Sediments: Soil, sand, and minerals washed from land into water, usually after rain, that collect in reservoirs, rivers, and harbors, destroying fish nesting areas and clouding the water, thus preventing sunlight from reaching aquatic plants. Farming, mining, and building activities without proper implementation of BMPs will expose sediment materials, allowing them to be washed off the land after rainfalls.

Significant Materials: Includes, but not limited to, raw materials; fuels; materials such as solvents, detergents, and plastic pellets; finished materials such as metallic products; raw materials used in food processing or production; hazardous substances designed under Section 101(14) of CERLCA; any chemical the facility is required to report pursuant to Section 313 of Title III of SARA; fertilizers; pesticides; and waste products such as ashes, slag, and sludge that have the potential to be released with stormwater discharges.

Significant Quantities: The volume, concentrations, or mass of a pollutant in stormwater discharge that can cause or threaten to cause pollution, contamination, or nuisance that adversely impact human health or the environment and cause or contribute to a violation of any applicable water quality standards for receiving water.

Source Control BMPs: Operational practices that reduce potential pollutants at the source.

Source Reduction (also source control): The technique of stopping and/ or reducing pollutants at their point of generation so that they do not come into contact with stormwater.

Storm Drains: Above- and below-ground structures for transporting stormwater to streams or outfalls for flood control purposes.

Stormwater: Defined as urban runoff and snowmelt runoff consisting only of those discharges, which originate from precipitation events. Stormwater is that portion of precipitation that flows across a surface to the storm drain system or receiving waters.

Stormwater Discharge Associated with Industrial Activity: Discharge from any conveyance which is used for collecting and conveying stormwater from an area that is directly related to manufacturing, processing, or raw materials storage activities at an industrial plant.

Stormwater Pollution Control Plan (SWPCP): A less formal plan than the SWPPP that addresses the implementation of BMPs at facilities/businesses not covered by a general permit but that have the potential to discharge pollutants.

Stormwater Pollution Prevention Plan (SWPPP): A written plan that documents the series of phases and activities that, first, characterizes your site, and then prompts you to select and carry out actions which prevent the pollution of stormwater discharges.

Treatment Control BMPs: Treatment methods to remove pollutants from stormwater.

Toxicity: Adverse responses of organisms to chemicals or physical agents ranging from mortality to physiological responses such as impaired reproduction or growth anomalies.

Turbidity: Describes the ability of light to pass through water. The cloudy appearance of water caused by suspended and colloidal matter (particles).

5.2 Acronyms

AASHTO	American Association of State Highway and Transportation Officials
AC	Asphalt Concrete
ADL	Aerially Deposited Lead
AIMP	Impervious Area
AINF	Infiltration Area
ANSI	American National Standards Institute
APHA	American Public Health Association
APWA	American Public Works Association
ARS	Agricultural Research Service
AQMD	Air Quality Management District
ASTM	American Society for Testing Materials
AWWA	American Water Works Association
BAT	Best Available Technology (economically available)
BCT	Best Conventional Technology (pollution control)
BFP	Bonded Fiber Matrix
BMPs	Best Management Practices
BOD	Biological Oxygen Demand
CA	Contractor Activities
CAL-EPA	California Environmental Protection Agency
CAL-OSHA	California Division of Occupational Safety and Health Administration
CASQA	California Stormwater Quality Association
CCR	California Code of Regulations

CCS	Cellular Confinement System
CEQA	California Environmental Quality Act
CERCLA	Comprehensive Environmental Response Compensation and Liability Act
CFR	Code of Federal Register
CMA	Congestion Management Program
COE	U.S. Army Corps of Engineers
CPI	Coalescing Plate Interceptor
CWA	Clean Water Act (Federal Water Pollution Control Act of 1972 as amended in 1987)
DCIA	Directly Connected Impervious Area
DTSC	California Department of Toxic Substances Control
EEC	Effect Effluent Concentration
EIR	Environmental Impact Report
EMC	Event Mean Concentration
EOS	Equivalent Opening Size
ESA	Environmentally Sensitive Area
ESC	Erosion and Sedimentation Control
FEMA	Federal Emergency Management Agency
FHWA	Federal Highway Administration
GIS	Geographical Information System
Hazmat	Hazardous Material
HSG	Hydrologic Soil Groups
IPM	Integrated Pest Management
JURMP	Jurisdictional Urban Runoff Management Program
MEP	Maximum Extent Practicable

MS4	Municipal Separate Storm Sewer System
MSDS	Material Safety Data Sheet
MSHA	Mine Safety and Health Administration
NMFS	National Marine Fisheries Service
NOAA	National Oceanographic and Atmospheric Administration
NOI	Notice of Intent
NPDES	National Pollution Discharge Elimination System
NPS	Nonpoint Source
NRC	National Response Center
NRCS	Natural Resources Conservation Service
NSF	National Science Foundation
NURP	National Urban Runoff Program
O&G	Oil and Grease
O&M	Operations and Maintenance
OSDS	On-site Disposal System
OSHA	Occupational Safety and Health Administration
P2	Pollution Prevention
PAHs	Polyaromatic Hydrocarbons
PAM	Polyacrylamide
PCBs	Polychlorinated Biphenyls
PCC	Portland Concrete Cement
PPT	Pollution Prevention Team
POTW	Publicly Owned Treatment Works
PSD	Particle Size Distribution
RCRA	Resource Conservation and Recovery Act

RWQCB	Regional Water Quality Control Board
SAP	Sampling and Analysis Plan
SARA	Superfund Amendments and Reauthorization Act
SIC	Standard Industrial Classification
SPCC	Spill Prevention Control and Countermeasure
SUSMP	Standard Urban Stormwater Mitigation Plan
SWMP	Stormwater Management Program
SWPCP	Stormwater Pollution Control Plan
SWPPP	Stormwater Pollution Prevention Plan
SWRCB	State Water Resource Control Board
TMDL	Total Maximum Daily Load
TOC	Total Organic Carbon
TSS	Total Suspended Solids
UFC	Uniform Fire Code
USACE	United States Army Corps of Engineers
USDA	United States Department of Agriculture
USDOT	United States Department of Transportation
USEPA	United States Environmental Protection Agency
WEF	Water Environment Federation

Appendix A
General Permit

Winston H. Hickox
Secretary for Environmental Protection

State Water Resources Control Board

Division of Water Quality
1001 I Street • Sacramento, California 95814 • (916) 341-5537
Mailing Address: P.O. Box 1977 • Sacramento, California • 95812-1977
FAX (916) 341-5543 • Internet Address: http://www.swrcb.ca.gov

Gray Davis
Governor

To: CONSTRUCTION STORM WATER DISCHARGER

SUBJECT: CHECKLIST FOR SUBMITTING A NOTICE OF INTENT

In order for the State Water Resources Control Board to expeditiously process your Notice of Intent (NOI), the following items must be submitted to either of the addresses indicated below:

1._____ NOI (please keep a copy for your files) with all applicable sections completed and original signature of the landowner or signatory agent;

2._____ Check made out to the "State Water Resources Control Board" for $**700.00**; and

3. _____ Site Map of the facility (see NOI instructions). DO NOT SEND BLUEPRINTS

U.S. Postal Service Address

State Water Resources Control Board
Division of Water Quality
Attn: Storm Water Section
P.O. Box 1977
Sacramento, CA 95812-1977

Overnight Mailing Address

State Water Resources Control Board
Division Of Water Quality
Attn: Storm Water, 15th Floor
1001 I Street
Sacramento, CA 95814

NOIs are processed in the order they are received. A NOI receipt letter will be mailed to the land owner within approximately two weeks. Incomplete NOI submittals will be returned to the landowner's address within the same timeframe and will specify the reason(s) for return. If you need a receipt letter by a specific date (for example, to provide to a local agency), we advise that you submit your NOI thirty (30) days prior to the date the receipt letter is needed.

Please do not call us to verify your NOI status. A copy of your NOI receipt letter will be available on our web page within twenty-four (24) hours of processing. Go to: http://esmr.swrcb.ca.gov/dwq/ConReceiptLetter.asp to retrieve an electronic copy of your NOI receipt letter. If you have any questions regarding this matter, please contact us at (916) 341-5537.

FACT SHEET
FOR
WATER QUALITY ORDER 99-08-DWQ

STATE WATER RESOURCES CONTROL BOARD (SWRCB)
901 P STREET, SACRAMENTO, CALIFORNIA 95814

NATIONAL POLLUTANT DISCHARGE ELIMINATION SYSTEM (NPDES)
GENERAL PERMIT FOR
STORM WATER DISCHARGES ASSOCIATED WITH
CONSTRUCTION ACTIVITY (GENERAL PERMIT)

BACKGROUND

In 1972, the Federal Water Pollution Control Act (also referred to as the Clean Water Act [CWA]) was amended to provide that the discharge of pollutants to waters of the United States from any point source is unlawful unless the discharge is in compliance with an NPDES permit. The 1987 amendments to the CWA added Section 402(p) which establishes a framework for regulating municipal and industrial storm water discharges under the NPDES Program. On November 16, 1990, the U.S. Environmental Protection Agency (USEPA) published final regulations that establish storm water permit application requirements for specified categories of industries. The regulations provide that discharges of storm water to waters of the United States from construction projects that encompass five (5) or more acres of soil disturbance are effectively prohibited unless the discharge is in compliance with an NPDES Permit. Regulations (Phase II Rule) that became final on December 8, 1999 expand the existing NPDES program to address storm water discharges from construction sites that disturb land equal to or greater than one (1) acre and less than five (5) acres (small construction activity). The regulations require that small construction activity, other than those regulated under an individual or Regional Water Quality Control Board General Permit, must be permitted no later than March 10, 2003.

While federal regulations allow two permitting options for storm water discharges (individual permits and General Permits), the SWRCB has elected to adopt only one statewide General Permit at this time that will apply to all storm water discharges associated with construction activity, except from those on Tribal Lands, in the Lake Tahoe Hydrologic Unit, and those performed by the California Department of Transportation (Caltrans). Construction on Tribal Lands is regulated by an USEPA permit, the Lahontan Regional Water Control Board adopted a separate NPDES permit for the Lake Tahoe Hydrologic Unit, and the SWRCB adopted a separate NPDES permit for Caltrans projects. This General Permit requires all dischargers where construction activity disturbs one acre or more, to:

1. Develop and implement a Storm Water Pollution Prevention Plan (SWPPP) which specifies Best Management Practices (BMPs) that will prevent all construction pollutants from contacting storm water and with the intent of keeping all products of erosion from moving off site into receiving waters.

2. Eliminate or reduce nonstorm water discharges to storm sewer systems and other waters of the nation.

3. Perform inspections of all BMPs.

This General Permit shall be implemented and enforced by the nine California Regional Water Quality Control Boards (RWQCBs).

The General Permit accompanying this fact sheet regulates storm water runoff from construction sites. Regulating many storm water discharges under one permit will greatly reduce the otherwise overwhelming administrative burden associated with permitting individual storm water discharges. Dischargers shall submit a Notice of Intent (NOI) to obtain coverage under this General Permit. It is expected that as the storm water program develops, the RWQCBs may issue General Permits or individual permits containing more specific permit provisions. When this occurs, those dischargers will no longer be regulated by this General Permit.

On August 19, 1999, the State Water Resources Control Board (SWRCB) reissued the General Construction Storm Water Permit (Water Quality Order 99-08-DWQ referred to as "General Permit"). The San Francisco BayKeeper, Santa Monica BayKeeper, San Diego BayKeeper, and Orange Coast Keeper filed a petition for writ of mandate challenging the General Permit in the Superior Court, County of Sacramento. The Court issued a judgment and writ of mandate on September 15, 2000. The Court directed the SWRCB to modify the provisions of the General Permit to require permittees to implement specific sampling and analytical procedures to determine whether Best Management Practices (BMPs) implemented on a construction site are: (1) preventing further impairment by sediment in storm waters discharged directly into waters listed as impaired for sediment or silt, and (2) preventing other pollutants, that are known or should be known by permittees to occur on construction sites and that are not visually detectable in storm water discharges, from causing or contributing to exceedances of water quality objectives. The monitoring provisions in the General Permit have been modified pursuant to the court order.

TYPES OF CONSTRUCTION ACTIVITY COVERED BY THIS GENERAL PERMIT

Construction activity subject to this General Permit includes clearing, grading, disturbances to the ground such as stockpiling, or excavation that results in soil disturbances of at least one acre of total land area. Construction activity that results in soil disturbances of less than one acre is subject to this General Permit if the construction activity is part of a larger common plan of development that encompasses one or more acres of soil disturbance or if there is significant water quality impairment resulting from the activity. Construction activity does not include routine maintenance to maintain original line and grade, hydraulic capacity, or original purpose of the facility, nor does it include emergency construction activities required to protect public health and safety. Dischargers should confirm with the local RWQCB whether or not a particular routine maintenance activity is subject to this General Permit.

A construction project which includes a dredge and/or fill discharge to any jurisdictional surface water (e.g., wetland, channel, pond, or marine water) will also need a CWA Section 404 permit from the U.S. Army Corps of Engineers and a CWA Section 401 Water Quality Certification from the RWQCB/SWRCB. Storm water discharges from dredge spoil placement which occurs outside of Corps jurisdiction (upland sites) and are part of construction activity which disturbs one or more acres of land are covered by this general permit. Proponents of construction projects which disturb one or more acres of land within the jurisdictional boundaries of a CWA Section 404 permit should contact the local RWQCB to determine the applicability of this permit to the project.

NOTIFICATION REQUIREMENTS

It is the responsibility of the landowner to obtain coverage under this General Permit prior to commencement of construction activities. To obtain coverage, the landowner must file an NOI with a vicinity map and the appropriate fee with the SWRCB. In addition, coverage under this permit shall not occur until the applicant develops an adequate SWPPP for the project. Section A of the General Permit outlines the required contents of a SWPPP. For proposed construction activity on easements or on nearby property by agreement or permission, the entity responsible for the construction activity shall file an NOI and filing fee and shall be responsible for development of the SWPPP, all of which must occur prior to commencement of construction activities.

A separate NOI shall be submitted to the SWRCB for each construction site. Owners of new construction shall file an NOI prior to the commencement of construction. Owners of an ongoing construction site that is covered under the previous General Construction Permit (WQ Order No.92-08-DWQ) (1) shall continue to implement their existing SWPPP and monitoring program and (2) shall implement any necessary revisions to their SWPPP in a timely manner but in no case later than 90-calender days from adoption of this General Permit in accordance with Section A of this General Permit.

The NOI requirements of the General Permit are intended to establish a mechanism which can be used to clearly identify the responsible parties, locations, and scope of operations of dischargers covered by the General Permit and to document the discharger's knowledge of the requirements for a SWPPP.

The NOI must be sent to the following address:

State Water Resources Control Board
Division of Water Quality
Storm Water Permit Unit
P.O. Box 1977
Sacramento, CA 95812-1977

The current annual fee for this General Permit is $700.

When construction is complete or ownership has been transferred, dischargers shall file a Notice of Termination with the RWQCB certifying that all State and local requirements have been met in accordance with Special Provisions for Construction Activity, C.7, of the General Permit.

Dischargers who fail to obtain coverage under this General Permit for storm water discharges to surface waters will be in violation of the CWA and the California Water Code.

CONSTRUCTION ACTIVITY NOT COVERED BY THIS GENERAL PERMIT

This General Permit does not apply to storm water discharges from (1) those areas on Tribal Lands; (2) the Lake Tahoe Hydrologic Unit; (3) construction under one acre, unless part of a larger common plan of development or sale; (4) projects covered by an individual NPDES Permit for storm water discharges associated with construction activity; and (5) landfill construction that is subject to the general industrial permit.

Storm water discharges in the Lake Tahoe Hydrologic Unit are regulated by a separate permit(s) adopted by the California Regional Water Quality Control Board, Lahontan Region (LRWQCB). USEPA regulates storm water discharges on Tribal Lands. Permit applications for storm water discharges that will be conducted in the Lake Tahoe Hydrologic Unit must be submitted directly to the LRWQCB.

DESCRIPTION OF GENERAL PERMIT CONDITIONS

The following is a brief description of the major provisions of the General Permit and the basis for the General Permit.

Prohibitions

This General Permit authorizes the discharge of storm water to surface waters from construction activities that result in the disturbance of one or more acres of land. It prohibits the discharge of materials other than storm water and authorized non-storm water discharges and all discharges which contain a hazardous substance in excess of reportable quantities established at 40 Code of Federal Regulations (CFR) 117.3 or 40 CFR 302.4 unless a separate NPDES Permit has been issued to regulate those discharges. In addition, this General Permit contains provisions that uphold discharge prohibitions contained in water quality control plans, as implemented through the nine RWQCBs.

Effluent Limitations

Permits for storm water discharges associated with construction activity shall meet all applicable provisions of Sections 301 and 402 of the CWA. These provisions require controls of pollutant discharges that utilize best available technology economically achievable (BAT) and best conventional pollutant control technology (BCT) to reduce pollutants and any more stringent controls necessary to meet water quality standards.

It is not feasible at this time for the SWRCB to establish numeric effluent limitations. The reasons why it is not feasible to establish numeric effluent limitations are discussed in detail in SWRCB Order Nos. WQ 91-03 and WQ 91-04. Therefore, the effluent limitations contained in this General Permit are narrative and include the requirement to implement appropriate BMPs. The BMPs shall primarily emphasize source controls such as erosion control and pollution prevention methods. The discharger shall also install structural controls, as necessary, such as sediment control which will constitute BAT and BCT and will achieve compliance with water quality standards. The narrative effluent limitations constitute compliance with the requirements of the CWA.

Elimination or reduction of nonstorm water discharges is a major goal of this General Permit. Nonstorm water discharges include a wide variety of sources, including improper dumping, spills, or leakage from storage tanks or transfer areas. Nonstorm water discharges may contribute a significant pollutant load to receiving waters. Measures to control spills, leakage, and dumping and to prevent illicit connections during construction shall be addressed through structural as well as non-structural BMPs.

This General Permit prohibits the discharge of materials other than storm water and authorized nonstorm water discharges. It is recognized that certain nonstorm water discharges may be necessary for the completion of construction projects. Such discharges include, but are not limited to irrigation of vegetative erosion control measures, pipe flushing and testing, street cleaning, and dewatering. Such discharges are allowed by this General Permit provided they are not relied upon to clean up failed or inadequate construction or post-construction BMPs designed to keep materials onsite. These authorized nonstorm water discharges shall (1) be infeasible to eliminate, (2) comply with BMPs as described in the SWPPP, and (3) not cause or contribute to a violation of water quality standards. Additionally, these discharges may be required to be permitted by the local RWQCB (e.g., some RWQCBs have adopted General Permits for dewatering discharges). This General Permit is performance-based to the extent that it prohibits the discharge of storm water that causes or threatens to cause pollution, contamination, or nuisance; but it also allows the owner/developer to determine the most economical, effective, and possibly innovative BMPs.

The requirements of this General Permit are intended to be implemented on a year-round basis, not just during the part of the year when there is a high probability of a precipitation event which results in storm water runoff. The permit should be implemented at the appropriate level and in a proactive manner during all seasons while construction is ongoing.

Weather and storm predictions or weather information concerning the 10-year, 6-hour storm event and mean annual rainfall can be obtained by calling the Western Regional Climate Center at 775-674-7010 or via the internet at www.wrcc.dri.edu/precip.html and/or www.wrcc.dri.edu/pcpnfreq.html.

<u>Receiving Water Limitations Language</u>

The receiving water limitations language is fundamentally different from the language adopted in the SWRCB General Industrial Activities Storm Water Permit on April 17, 1997. Construction related activities which cause or contribute to an exceedance of water quality standards must be corrected immediately and cannot wait for the RWQCB to approve a plan of action to correct. The dynamic nature of construction activity allows the discharger the ability to more quickly identify and correct the source of the exceedances. Therefore, the owner is required to take immediate corrective action and to provide a report to the appropriate RWQCB within
14-calendar days of the violation describing the corrective action.

Storm Water Pollution Prevention Plan (SWPPP)

This General Permit requires development and implementation of a SWPPP. This document emphasizes the use of appropriately selected, correctly installed and maintained pollution reduction BMPs. This approach provides the flexibility necessary to establish BMPs which can effectively address source control of pollutants during changing construction activities.

All dischargers shall prepare and implement a SWPPP prior to disturbing a site. The SWPPP must be implemented at the appropriate level to protect water quality at all times throughout the life of the project. Nonstorm water BMPs must be implemented year round. The SWPPP shall remain on the site while the site is under construction, commencing with the initial mobilization and ending with the termination of coverage under the permit.

The SWPPP has two major objectives: (1) to help identify the sources of sediment and other pollutants that affect the quality of storm water discharges and (2) to describe and ensure the implementation of BMPs to reduce or eliminate sediment and other pollutants in storm water as well as nonstorm water discharges. The SWPPP shall include BMPs which address source control and, if necessary, shall also include BMPs which address pollutant control.

Required elements of a SWPPP include: (1) site description addressing the elements and characteristics specific to the site, (2) descriptions of BMPs for erosion and sediment controls, (3) BMPs for construction waste handling and disposal, (4) implementation of approved local plans, (5) proposed post-construction controls, including description of local post-construction erosion and sediment control requirements, and (6) nonstorm water management.

To ensure that the preparation, implementation, and oversight of the SWPPP is sufficient for effective pollution prevention, individuals responsible for creating, revising, overseeing, and implementing the SWPPP should participate in applicable training programs and document such training in the SWPPP.

SWPPPs are reports that are available to the public under Section 308(b) of the CWA and will be made available by the RWQCB upon request.

Monitoring Program

Another major feature of the General Permit is the development and implementation of a monitoring program. All dischargers are required to conduct inspections of the construction site

prior to anticipated storm events and after actual storm events. During extended storm events, inspections must be made during each 24-hour period. The goals of these inspections are (1) to identify areas contributing to a storm water discharge; (2) to evaluate whether measures to reduce pollutant loadings identified in the SWPPP are adequate and properly installed and functioning in accordance with the terms of the General Permit; and (3) whether additional control practices or corrective maintenance activities are needed. Equipment, materials, and workers must be available for rapid response to failures and emergencies. All corrective maintenance to BMPs shall be performed as soon as possible, depending upon worker safety.

Each discharger shall certify annually that the construction activities are in compliance with the requirements of this General Permit. Dischargers who cannot certify annual compliance shall notify the appropriate RWQCB. A well-developed monitoring program will provide a good method for checking the effectiveness of the SWPPP.

Retention of Records

The discharger is required to retain records of all monitoring information, copies of all reports required by this General Permit, and records of all data used to complete the NOI for all construction activities to be covered by the General Permit for a period of at least three years from the date generated. This period may be extended by request of the SWRCB and/or RWQCB. With the exception of reporting noncompliance to the appropriate RWQCB, dischargers are not required to submit the records, except upon specific request by the RWQCB.

STATE WATER RESOURCES CONTROL BOARD (SWRCB)
ORDER NO. 99 - 08 - DWQ
NATIONAL POLLUTANT DISCHARGE ELIMINATION SYSTEM (NPDES)
GENERAL PERMIT NO. CAS000002

WASTE DISCHARGE REQUIREMENTS (WDRS) FOR DISCHARGES OF STORM WATER RUNOFF ASSOCIATED WITH CONSTRUCTION ACTIVITY

The State Water Resources Control Board finds that:

1. Federal regulations for controlling pollutants in storm water runoff discharges were promulgated by the U.S. Environmental Protection Agency (USEPA) on November 16, 1990 (40 Code of Federal Regulations (CFR) Parts 122, 123, and 124). The regulations require discharges of storm water to surface waters associated with construction activity including clearing, grading, and excavation activities (except operations that result in disturbance of less than five acres of total land area and which are not part of a larger common plan of development or sale) to obtain an NPDES permit and to implement Best Available Technology Economically Achievable (BAT) and Best Conventional Pollutant Control Technology (BCT) to reduce or eliminate storm water pollution.

   On December 8, 1999 federal regulations promulgated by USEPA (40CFR Parts 9, 122, 123, and 124) expanded the NPDES storm water program to include storm water discharges from municipal separate storm sewer systems (MS4s) and construction sites that were smaller than those previously included in the program. Federal regulation 40 CFR § 122.26(b)(15) defines small construction activity as including clearing, grading, and excavating that result in land disturbance of equal to or greater than one acre or less than five acres or is part of a larger common plan of development or sale. Permit applications for small construction activities are due by March 10, 2003.

2. This General Permit regulates pollutants in discharges of storm water associated with construction activity (storm water discharges) to surface waters, except from those areas on Tribal Lands; Lake Tahoe Hydrologic Unit; construction projects which disturb less than one acre, unless part of a larger common plan of development or sale; and storm water discharges which are determined ineligible for coverage under this General Permit by the California Regional Water Quality Control Boards (RWQCBs). Attachment 1 contains addresses and telephone numbers of each RWQCB office.

3. This General Permit does not preempt or supersede the authority of local storm water management agencies to prohibit, restrict, or control storm water discharges to separate storm sewer systems or other watercourses within their jurisdiction, as allowed by State and Federal law.

4. To obtain authorization for proposed storm water discharges to surface waters, pursuant to this General Permit, the landowner (discharger) must submit a Notice of Intent (NOI) with a vicinity map and the appropriate fee to the SWRCB prior to commencement of construction activities. In addition, coverage under this General Permit shall not occur until the applicant develops a Storm Water Pollution Prevention Plan (SWPPP) in accordance with the requirements of Section A of this permit for the project. For proposed construction activity conducted on easements or on nearby property by agreement or permission, or by an owner or lessee of a mineral estate (oil, gas, geothermal, aggregate, precious metals, and/or industrial minerals) entitled to conduct the activities, the entity responsible for the construction activity must submit the NOI and filing fee and shall be responsible for development of the SWPPP.

5. If an individual NPDES Permit is issued to a discharger otherwise subject to this General Permit or if an alternative General Permit is subsequently adopted which covers storm water discharges regulated by this General Permit, the applicability of this General Permit to such discharges is automatically terminated on the effective date of the individual permit or the date of approval for coverage under the subsequent General Permit.

6. This action to adopt an NPDES permit is exempt from the provisions of the California Environmental Quality Act (Public Resources Code Section 21100, et seq.) in accordance with section 13389 of the California Water Code.

7. The SWRCB adopted the California Ocean Plan, and the RWQCBs have adopted and the SWRCB has approved Water Quality Control Plans (Basin Plans). Dischargers regulated by this General Permit must comply with the water quality standards in these Basin Plans and subsequent amendments thereto.

8. The SWRCB finds storm water discharges associated with construction activity to be a potential significant sources of pollutants. Furthermore, the SWRCB finds that storm water discharges associated with construction activities have the reasonable potential to cause or contribute to an excursion above water quality standards for sediment in the water bodies listed in Attachment 3 to this permit.

9. It is not feasible at this time to establish numeric effluent limitations for pollutants in storm water discharges from construction activities. Instead, the provisions of this General Permit require implementation of Best Management Practices (BMPs) to control and abate the discharge of pollutants in storm water discharges.

10. Discharges of non-storm water may be necessary for the completion of certain construction projects. Such discharges include, but are not limited to: irrigation of vegetative erosion control measures, pipe flushing and testing, street cleaning, and dewatering. Such discharges are authorized by this General Permit as long as they (a) do comply with Section A.9 of this General Permit, (b) do not cause or contribute to violation of any water quality standard, (c) do not violate any other provision of this

General Permit, (d) do not require a non-storm water permit as issued by some RWQCBs, and (e) are not prohibited by a Basin Plan. If a non-storm water discharge is subject to a separate permit adopted by a RWQCB, the discharge must additionally be authorized by the RWQCB permit.

11. Following adoption of this General Permit, the RWQCBs shall enforce the provisions herein including the monitoring and reporting requirements.

12. Following public notice in accordance with State and Federal laws and regulations, the SWRCB in a public meeting on June 8, 1998, heard and considered all comments. The SWRCB has prepared written responses to all significant comments.

13. This Order is an NPDES permit in compliance with section 402 of the Clean Water Act (CWA) and shall take effect upon adoption by the SWRCB provided the Regional Administrator of the USEPA has no objection. If the USEPA Regional Administrator objects to its issuance, the General Permit shall not become effective until such objection is withdrawn.

14. This General Permit does not authorize discharges of fill or dredged material regulated by the U.S. Army Corps of Engineers under CWA section 404 and does not constitute a waiver of water quality certification under CWA section 401.

15 The Monitoring Program and Reporting Requirements are modified in compliance with a judgment in the case of San Francisco BayKeeper, et al. v. State Water Resources Control Board. The modifications include sampling and analysis requirements for direct discharges of sediment to waters impaired due to sediment and for pollutants that are not visually detectable in runoff that may cause or contribute to an exceedance of water quality objectives.

16 Storm water discharges associated with industrial activity that are owned or operated by municipalities serving populations less than 100,000 people are no longer exempt from the need to apply for or obtain a storm water discharge permit. A temporary exemption, which was later extended by USEPA, was provided under section 1068(c) of the Intermodal Surface Transportation and Efficiency Act (ISTEA) of 1991. Federal regulation 40 CFR § 122.26(e)(1)(ii) requires the above municipalities to submit permit application by March 10, 2003.

17 This permit may be reopened and modified to include different monitoring requirements for small construction activity than for construction activity over five (5) acres.

IT IS HEREBY ORDERED that all dischargers who file an NOI indicating their intention to be regulated under the provisions of this General Permit shall comply with the following:

A. DISCHARGE PROHIBITIONS:

1. Authorization pursuant to this General Permit does not constitute an exemption to applicable discharge prohibitions prescribed in Basin Plans, as implemented by the nine RWQCBs.

2. Discharges of material other than storm water which are not otherwise authorized by an NPDES permit to a separate storm sewer system (MS4) or waters of the nation are prohibited, except as allowed in Special Provisions for Construction Activity, C.3.

3. Storm water discharges shall not cause or threaten to cause pollution, contamination, or nuisance.

4. Storm water discharges regulated by this General Permit shall not contain a hazardous substance equal to or in excess of a reportable quantity listed in 40 CFR Part 117 and/or 40 CFR Part 302.

B. RECEIVING WATER LIMITATIONS:

1. Storm water discharges and authorized nonstorm water discharges to any surface or ground water shall not adversely impact human health or the environment.

2. The SWPPP developed for the construction activity covered by this General Permit shall be designed and implemented such that storm water discharges and authorized nonstorm water discharges shall not cause or contribute to an exceedance of any applicable water quality standards contained in a Statewide Water Quality Control Plan and/or the applicable RWQCB's Basin Plan.

3. Should it be determined by the discharger, SWRCB, or RWQCB that storm water discharges and/or authorized nonstorm water discharges are causing or contributing to an exceedance of an applicable water quality standard, the discharger shall:

   a. Implement corrective measures immediately following discovery that water quality standards were exceeded, followed by notification to the RWQCB by telephone as soon as possible but no later than 48 hours after the discharge has been discovered. This notification shall be followed by a report within 14-calender days to the appropriate RWQCB, unless otherwise directed by the RWQCB, describing (1) the nature and cause of the water quality standard exceedance; (2) the BMPs currently being implemented; (3) any additional BMPs which will be implemented to

prevent or reduce pollutants that are causing or contributing to the exceedance of water quality standards; and (4) any maintenance or repair of BMPs. This report shall include an implementation schedule for corrective actions and shall describe the actions taken to reduce the pollutants causing or contributing to the exceedance.

b. The discharger shall revise its SWPPP and monitoring program immediately after the report to the RWQCB to incorporate the additional BMPs that have been and will be implemented, the implementation schedule, and any additional monitoring needed.

c. Nothing in this section shall prevent the appropriate RWQCB from enforcing any provisions of this General Permit while the discharger prepares and implements the above report.

C. SPECIAL PROVISIONS FOR CONSTRUCTION ACTIVITY:

1. All dischargers shall file an NOI and pay the appropriate fee for construction activities conducted at each site as required by Attachment 2: Notice of Intent--General Instructions.

2. All dischargers shall develop and implement a SWPPP in accordance with Section A: Storm Water Pollution Prevention Plan. The discharger shall implement controls to reduce pollutants in storm water discharges from their construction sites to the BAT/BCT performance standard.

3. Discharges of non-storm water are authorized only where they do not cause or contribute to a violation of any water quality standard and are controlled through implementation of appropriate BMPs for elimination or reduction of pollutants. Implementation of appropriate BMPs is a condition for authorization of non-storm water discharges. Non-storm water discharges and the BMPs appropriate for their control must be described in the SWPPP. Wherever feasible, alternatives which do not result in discharge of nonstorm water shall be implemented in accordance with Section A.9. of the SWPPP requirements.

4. All dischargers shall develop and implement a monitoring program and reporting plan in accordance with Section B: Monitoring Program and Reporting Requirements.

5. All dischargers shall comply with the lawful requirements of municipalities, counties, drainage districts, and other local agencies regarding discharges of storm water to separate storm sewer systems or other watercourses under their jurisdiction, including applicable requirements in municipal storm water management programs developed to comply with NPDES permits issued by the RWQCBs to local agencies.

6. All dischargers shall comply with the standard provisions and reporting requirements contained in Section C: Standard Provisions.

7. The discharger may terminate coverage for a portion of the project under this General Permit when ownership of a portion of this project has been transferred or when a phase within this multi-phase project has been completed. When ownership has transferred, the discharger must submit to its RWQCB a Change of Information Form (COI) Attachment 4 with revised site map and the name, address and telephone number of the new owner(s). Upon transfer of title, the discharger should notify the new owner(s) of the need to obtain coverage under this General Permit. The new owner must comply with provisions of Sections A. 2. (c) and
B. 2. (b) of this General Permit. To terminate coverage for a portion of the project when a phase has been completed, the discharger must submit to its RWQCB a COI with a revised map that identifies the newly delineated site.

8. The discharger may terminate coverage under this General Permit for a complete project by submitting to its RWQCB a Notice of Termination Form (NOT), and the post-construction BMPs plan according to Section A.10 of this General Permit. Note that a construction project is considered complete only when all portions of the site have been transferred to a new owner; or the following conditions have been met:

   a. There is no potential for construction related storm water pollution,

   b. All elements of the SWPPP have been completed,

   c. Construction materials and waste have been disposed of properly,

   d. The site is in compliance with all local storm water management requirements, and

   e. A post-construction storm water management plan is in place as described in the site's SWPPP.

9. This General Permit expires five years from the date of adoption.

D. REGIONAL WATER QUALITY CONTROL BOARD (RWQCB) AUTHORITIES:

1. RWQCBs shall:

   a. Implement the provisions of this General Permit. Implementation of this General Permit may include, but is not limited to requesting the submittal of SWPPPS, reviewing SWPPPs, reviewing monitoring reports, conducting compliance inspections, and taking enforcement actions.

   b. Issue permits as they deem appropriate to individual dischargers, categories of dischargers, or dischargers in a geographic area. Upon issuance of such permits by a RWQCB, the affected dischargers shall no longer be regulated by this General Permit.

2. RWQCBs may require, on a case-by-case basis, the inclusion of an analysis of potential downstream impacts on receiving waterways due to the permitted construction.

3. RWQCBs may provide information to dischargers on the development and implementation of SWPPPs and monitoring programs and may require revisions to SWPPPs and monitoring programs.

4. RWQCBs may require dischargers to retain records for more than three years.

5. RWQCBs may require additional monitoring and reporting program requirements including sampling and analysis of discharges to water bodies listed in Attachment 3 to this permit. Additional requirements imposed by the RWQCB should be consistent with the overall monitoring effort in the receiving waters.

6. RWQCBs may issue individual NPDES permits for those construction activities found to be ineligible for coverage under this permit.

CERTIFICATION

The undersigned, Administrative Assistant to the Board, does hereby certify that the foregoing is a full, true, and correct copy of an order duly and regularly adopted at a meeting of the State Water Resources Control Board held on August 19, 1999.

AYE: James M. Stubchaer
Mary Jane Forster
John W. Brown
Arthur G. Baggett, Jr.

NO: None

ABSENT: None

ABSTAIN: None

/s/

Maureen Marché
Administrative Assistant to the Board

SECTION A: STORM WATER POLLUTION PREVENTION PLAN

1. Objectives

A Storm Water Pollution Prevention Plan (SWPPP) shall be developed and implemented to address the specific circumstances for each construction site covered by this General Permit. The SWPPP shall be certified in accordance with the signatory requirements of section C, Standard Provision for Construction Activities (9). The SWPPP shall be developed and amended or revised, when necessary, to meet the following objectives:

a. Identify all pollutant sources including sources of sediment that may affect the quality of storm water discharges associated with construction activity (storm water discharges) from the construction site, and

b. Identify non-storm water discharges, and

c. Identify, construct, implement in accordance with a time schedule, and maintain Best Management Practices (BMPs) to reduce or eliminate pollutants in storm water discharges and authorized nonstorm water discharges from the construction site during construction, and

d. Develop a maintenance schedule for BMPs installed during construction designed to reduce or eliminate pollutants after construction is completed (post-construction BMPs).

e. Identify a sampling and analysis strategy and sampling schedule for discharges from construction activity which discharge directly into water bodies listed on Attachment 3. (Clean Water Act Section 303(d) [303(d)] Water Bodies listed for Sedimentation).

f. For all construction activity, identify a sampling and analysis strategy and sampling schedule for discharges that have been discovered through visual monitoring to be potentially contaminated by pollutants not visually detectable in the runoff.

2. Implementation Schedule

a. For construction activity commencing on or after adoption of this General Permit, the SWPPP shall be developed prior to the start of soil-disturbing activity in accordance with this Section and shall be implemented concurrently with commencement of soil-disturbing activities.

b. Existing permittees engaging in construction activities covered under the terms of the previous General Construction Permit SWPPP (WQ Order No.92-08-DWQ) shall continue to implement their existing SWPPP and shall implement any

necessary revisions to their SWPPP in accordance with this Section of the General Permit in a timely manner, but in no case more than 90-calender days from the date of adoption of this General Permit.

c. For ongoing construction activity involving a change of ownership of property, the new owner shall review the existing SWPPP and amend if necessary, or develop a new SWPPP within 45-calender days.

d. Existing permittees shall revise their SWPPP in accordance with the sampling and analysis modifications prior to August 1, 2001. For ongoing construction activity involving a change of ownership the new owner shall review the existing SWPPP and amend the sampling and analysis strategy, if required, within 45 days. For construction activity commencing after the date of adoption, the SWPPP shall be developed in accordance with the modification language adopted.

3. Availability

The SWPPP shall remain on the construction site while the site is under construction during working hours, commencing with the initial construction activity and ending with termination of coverage under the General Permit.

4. Required Changes

a. The discharger shall amend the SWPPP whenever there is a change in construction or operations which may affect the discharge of pollutants to surface waters, ground waters, or a municipal separate storm sewer system (MS4). The SWPPP shall also be amended if the discharger violates any condition of this General Permit or has not achieved the general objective of reducing or eliminating pollutants in storm water discharges. If the RWQCB determines that the discharger is in violation of this General Permit, the SWPPP shall be amended and implemented in a timely manner, but in no case more than 14-calendar days after notification by the RWQCB. All amendments should be dated and directly attached to the SWPPP.

b. The RWQCB or local agency with the concurrence of the RWQCB may require the discharger to amend the SWPPP.

5. Source Identification

The SWPPP shall include: (a) project information and (b) pollutant source identification combined with an itemization of those BMPs specifically chosen to control the pollutants listed.

a. Project Information

(1) The SWPPP shall include a vicinity map locating the project site with respect to easily identifiable major roadways, geographic features, or landmarks. At a minimum, the map must show the construction site perimeter, the geographic features surrounding the site, and the general topography.

(2) The SWPPP shall include a site map(s) which shows the construction project in detail, including the existing and planned paved areas and buildings.

(a) At a minimum, the map must show the construction site perimeter; existing and proposed buildings, lots, roadways, storm water collection and discharge points; general topography both before and after construction; and the anticipated discharge location(s) where the storm water from the construction site discharges to a municipal storm sewer system or other water body.

(b) The drainage patterns across the project area must clearly be shown on the map, and the map must extend as far outside the site perimeter as necessary to illustrate the relevant drainage areas. Where relevant drainage areas are too large to depict on the map, map notes or inserts illustrating the upstream drainage areas are sufficient.

(c) Temporary on-site drainages to carry concentrated flow shall be selected to comply with local ordinances, to control erosion, to return flows to their natural drainage courses, and to prevent damage to downstream properties.

3. Information presented in the SWPPP may be represented either by narrative or by graphics. Where possible, narrative descriptions should be plan notes. Narrative descriptions which do not lend themselves to plan notes can be contained in a separate document which must be referenced on the plan.

b. Pollutant Source and BMP Identification

The SWPPP shall include a description of potential sources which are likely to add pollutants to storm water discharges or which may result in nonstorm water discharges from the construction site. Discharges originating from off-site which flow across or through areas disturbed by construction that may contain pollutants should be reported to the RWQCB.

The SWPPP shall:

(1) Show drainage patterns and slopes anticipated after major grading activities are completed. Runoff from off-site areas should be prevented from flowing through areas that have been disturbed by construction unless appropriate conveyance systems are in place. The amount of anticipated storm water run-on must be considered to determine the appropriateness of the BMPs chosen. Show all calculations for anticipated storm water run-on, and describe all BMPs implemented to divert off-site drainage described in section A. 5 a. (2) (c) around or through the construction project.

(2) Show the drainage patterns into each on-site storm water inlet point or receiving water. Show or describe the BMPs that will protect operational storm water inlets or receiving waters from contaminated discharges other than sediment discharges, such as, but not limited to: storm water with elevated pH levels from contact with soil amendments such as lime or gypsum; slurry from sawcutting of concrete or asphalt ;washing of exposed aggregate concrete; concrete rinse water; building washing operations; equipment washing operations; minor street washing associated with street delineation; and/or sealing and paving activities occurring during rains.

(3) Show existing site features that, as a result of known past usage, may contribute pollutants to storm water, (e.g., toxic materials that are known to have been treated, stored, disposed, spilled, or leaked onto the construction site). Show or describe the BMPs implemented to minimize the exposure of storm water to contaminated soil or toxic materials.

(4) Show areas designated for the (a) storage of soil or waste, (b) vehicle storage and service areas, (c) construction material loading, unloading, and access areas, (d) equipment storage, cleaning, and maintenance areas.

(5) Describe the BMPs for control of discharges from waste handling and disposal areas and methods of on-site storage and disposal of construction materials and construction waste. Describe the BMPs designed to minimize or eliminate the exposure of storm water to construction materials, equipment, vehicles, waste storage areas, or service areas. The BMPs described shall be in compliance with Federal, State, and local laws, regulations, and ordinances.

(6) Describe all post-construction BMPs for the project, and show the location of each BMP on the map. (Post-construction BMPs consist of permanent features designed to minimize pollutant discharges, including sediment, from the site after construction has been completed.) Also, describe the agency or parties to be the responsible party for long-term maintenance of these BMPs.

(7) Show the locations of direct discharge from the construction site into a Section 303(d) list water body. Show the designated sampling locations in the receiving waters, which represent the prevailing conditions of the water bodies upstream of the construction site discharge and immediately downstream from the last point of discharge.

(8) Show the locations designated for sampling the discharge from areas identified in Section A. 5. b. (2), (3), and (4) and Section A. 5. c. (1) and (2). Samples shall be taken should visual monitoring indicate that there has been a breach, malfunction, leakage, or spill from a BMP which could result in the discharge in storm water of pollutants that would not be visually detectable, or if storm water comes into contact with soil amendments or other exposed materials or contamination and is allowed to be discharged. Describe the sampling procedure, location, and rationale for obtaining the uncontaminated sample of storm water.

c. Additional Information

(1) The SWPPP shall include a narrative description of pollutant sources and BMPs that cannot be adequately communicated or identified on the site map. In addition, a narrative description of preconstruction control practices (if any) to reduce sediment and other pollutants in storm water discharges shall be included.

(2) The SWPPP shall include an inventory of all materials used and activities performed during construction that have the potential to contribute to the discharge of pollutants other than sediment in storm water. Describe the BMPs selected and the basis for their selection to eliminate or reduce these pollutants in the storm water discharges.

(3) The SWPPP shall include the following information regarding the construction site surface area: the size (in acres or square feet), the runoff coefficient before and after construction, and the percentage that is impervious (e.g., paved, roofed, etc.) before and after construction.

(4) The SWPPP shall include a copy of the NOI, and the Waste Discharge Identification (WDID) number. Should a WDID number not be received from the SWRCB at the time construction commences, the discharger shall include proof of mailing of the NOI, e.g., certified mail receipt, copy of check, express mail receipt, etc.

(5) The SWPPP shall include a construction activity schedule which describes all major activities such as mass grading, paving, lot or parcel

improvements at the site and the proposed time frame to conduct those activities.

(6) The SWPPP shall list the name and telephone number of the qualified person(s) who have been assigned responsibility for prestorm, poststorm, and storm event BMP inspections; and the qualified person(s) assigned responsibility to ensure full compliance with the permit and implementation of all elements of the SWPPP, including the preparation of the annual compliance evaluation and the elimination of all unauthorized discharges.

6. Erosion Control

Erosion control, also referred to as "soil stabilization" is the most effective way to retain soil and sediment on the construction site. The most efficient way to address erosion control is to preserve existing vegetation where feasible, to limit disturbance, and to stabilize and revegetate disturbed areas as soon as possible after grading or construction. Particular attention must be paid to large mass-graded sites where the potential for soil exposure to the erosive effects of rainfall and wind is great. Mass graded construction sites may be exposed for several years while the project is being built out. Thus, there is potential for significant sediment discharge from the site to surface waters.

At a minimum, the discharger/operator must implement an effective combination of erosion and sediment control on all disturbed areas during the rainy season. These disturbed areas include rough graded roadways, slopes, and building pads. Until permanent vegetation is established, soil cover is the most cost-effective and expeditious method to protect soil particles from detachment and transport by rainfall. Temporary soil stabilization can be the single-most important factor in reducing erosion at construction sites. The discharger shall consider measures such as: covering with mulch, temporary seeding, soil stabilizers, binders, fiber rolls or blankets, temporary vegetation, permanent seeding, and a variety of other measures.

The SWPPP shall include a description of the erosion control practices, including a time schedule, to be implemented during construction to minimize erosion on disturbed areas of a construction site. The discharger must consider the full range of erosion control BMPs. The discharger must consider any additional site-specific and seasonal conditions when selecting and implementing appropriate BMPs. The above listed erosion control measures are examples of what should be considered and are not exclusive of new or innovative approaches currently available or being developed.

a. The SWPPP shall include:

(1) An outline of the areas of vegetative soil cover or native vegetation onsite which will remain undisturbed during the construction project.

(2) An outline of all areas of soil disturbance including cut or fill areas which will be stabilized during the rainy season by temporary or permanent erosion control measures, such as seeding, mulch, or blankets, etc.

(3) An outline of the areas of soil disturbance, cut, or fill which will be left exposed during any part of the rainy season, representing areas of potential soil erosion where sediment control BMPs are required to be used during construction.

(4) A proposed schedule for the implementation of erosion control measures.

b. The SWPPP shall include a description of the BMPs and control practices to be used for both temporary and permanent erosion control measures.

c. The SWPPP shall include a description of the BMPs to reduce wind erosion at all times, with particular attention paid to stock-piled materials.

7. Stabilization

(1) All disturbed areas of the construction site must be stabilized. Final stabilization for the purposes of submitting a NOT is satisfied when:

-All soil disturbing activities are completed AND EITHER OF THE TWO FOLLOWING CRITERIA ARE MET:

-A uniform vegetative cover with 70 percent coverage has been established OR:

-equivalent stabilization measures have been employed. These measures include the use of such BMPs as blankets, reinforced channel liners, soil cement, fiber matrices, geotextiles, or other erosion resistant soil coverings or treatments.

(2) Where background native vegetation covers less than 100 percent of the surface, such as in arid areas, the 70 percent coverage criteria is adjusted as follows: If the native vegetation covers 50 percent of the ground surface, 70 percent of 50 percent (.70 X .50=.35) would require 35 percent total uniform surface coverage.

8. <u>Sediment Control</u>

The SWPPP shall include a description or illustration of BMPs which will be implemented to prevent a net increase of sediment load in storm water discharge relative to preconstruction levels. Sediment control BMPs are required at appropriate locations along the site perimeter and at all operational internal inlets to the storm drain system at all times during the rainy season. Sediment control practices may include filtration devices and barriers (such as fiber rolls, silt fence, straw bale barriers, and gravel inlet filters) and/or settling devices (such as sediment traps or basins). Effective filtration devices, barriers, and settling devices shall be selected, installed and maintained properly. A proposed schedule for deployment of sediment control BMPs shall be included in the SWPPP. These are the most basic measures to prevent sediment from leaving the project site and moving into receiving waters. Limited exemptions may be authorized by the RWQCB when work on active areas precludes the use of sediment control BMPs temporarily. Under these conditions, the SWPPP must describe a plan to establish perimeter controls prior to the onset of rain.

During the nonrainy season, the discharger is responsible for ensuring that adequate sediment control materials are available to control sediment discharges at the downgrade perimeter and operational inlets in the event of a predicted storm. The discharger shall consider a full range of sediment controls, in addition to the controls listed above, such as straw bale dikes, earth dikes, brush barriers, drainage swales, check dams, subsurface drain, sandbag dikes, fiber rolls, or other controls. At a minimum, the discharger/operator must implement an effective combination of erosion and sediment control on all disturbed areas during the rainy season.

If the discharger chooses to rely on sediment basins for treatment purposes, sediment basins shall, at a minimum, be designed and maintained as follows:

Option 1: Pursuant to local ordinance for sediment basin design and maintenance, provided that the design efficiency is as protective or more protective of water quality than Option 3.

OR

Option 2: Sediment basin(s), as measured from the bottom of the basin to the principal outlet, shall have at least a capacity equivalent to 3,600 cubic feet of storage per acre draining into the sediment basin. The length of the basin shall be more than twice the width of the basin. The length is determined by measuring the distance between the inlet and the outlet; and the depth must not be less than three feet nor greater than five feet for safety reasons and for maximum efficiency.

OR

Option 3: Sediment basin(s) shall be designed using the standard equation:

$$As=1.2Q/Vs$$

Where: As is the minimum surface area for trapping soil particles of a certain size; Vs is the settling velocity of the design particle size chosen; and Q=C x I x A where Q is the discharge rate measured in cubic feet per second; C is the runoff coefficient; I is the precipitation intensity for the 10-year, 6-hour rain event and A is the area draining into the sediment basin in acres. The design particle size shall be the smallest soil grain size determined by wet sieve analysis, or the fine silt sized (0.01mm) particle, and the Vs used shall be 100 percent of the calculated settling velocity.

The length is determined by measuring the distance between the inlet and the outlet; the length shall be more than twice the dimension as the width; the depth shall not be less than three feet nor greater than five feet for safety reasons and for maximum efficiency (two feet of storage, two feet of capacity). The basin(s) shall be located on the site where it can be maintained on a year-round basis and shall be maintained on a schedule to retain the two feet of capacity;

OR

Option 4: The use of an equivalent surface area design or equation, provided that the design efficiency is as protective or more protective of water quality than Option 3.

A sediment basin shall have a means for dewatering within 7-calendar days following a storm event. Sediment basins may be fenced if safety (worker or public) is a concern.

The outflow from a sediment basin that discharges into a natural drainage shall be provided with outlet protection to prevent erosion and scour of the embankment and channel.

The discharger must consider any additional site-specific and seasonal conditions when selecting and designing sediment control BMPs. The above listed sediment control measures are examples of what should be considered and are not exclusive of new or innovative approaches currently available or being developed.

The SWPPP shall include a description of the BMPs to reduce the tracking of sediment onto public or private roads at all times. These public and private roads shall be inspected and cleaned as necessary. Road cleaning BMPs shall be discussed in the SWPPP and will not rely on the washing of accumulated sediment or silt into the storm drain system.

9. Non-Storm Water Management

Describe all non-storm water discharges to receiving waters that are proposed for the construction project. Non-storm water discharges should be eliminated or reduced to the extent feasible. Include the locations of such discharges and descriptions of all BMPs designed for the control of pollutants in such discharges. Onetime discharges shall be monitored during the time that such discharges are occurring. A qualified person should be assigned the responsibility for ensuring that no materials other than storm water are discharged in quantities which will have an adverse effect on receiving waters or storm drain systems (consistent with BAT/BCT), and the name and contact number of that person should be included in the SWPPP document.

Discharging sediment-laden water which will cause or contribute to an exceedance of the applicable RWQCB's Basin Plan from a dewatering site or sediment basin into any receiving water or storm drain without filtration or equivalent treatment is prohibited.

10. Post-Construction Storm Water Management

The SWPPP shall include descriptions of the BMPs to reduce pollutants in storm water discharges after all construction phases have been completed at the site (Post-Construction BMPs). Post-Construction BMPs include the minimization of land disturbance, the minimization of impervious surfaces, treatment of storm water runoff using infiltration, detention/retention, biofilter BMPs, use of efficient irrigation systems, ensuring that interior drains are not connected to a storm sewer system, and appropriately designed and constructed energy dissipation devices. These must be consistent with all local post-construction storm water management requirements, policies, and guidelines. The discharger must consider site-specific and seasonal conditions when designing the control practices. Operation and maintenance of control practices after construction is completed shall be addressed, including short-and long-term funding sources and the responsible party.

11. Maintenance, Inspection, and Repair

The SWPPP shall include a discussion of the program to inspect and maintain all BMPs as identified in the site plan or other narrative documents throughout the entire duration of the project. A qualified person will be assigned the responsibility to conduct inspections. The name and telephone number of that person shall be listed in the SWPPP document. Inspections will be performed before and after storm events and once each 24-hour period during extended storm events to identify BMP effectiveness and implement repairs or design changes as soon as feasible depending upon field conditions. Equipment, materials, and workers must be available for rapid response to failures and emergencies. All corrective maintenance to BMPs shall be performed as soon as possible after the conclusion of each storm depending upon worker safety.

For each inspection required above, the discharger shall complete an inspection checklist. At a minimum, an inspection checklist shall include:

a. Inspection date.

b. Weather information: best estimate of beginning of storm event, duration of event, time elapsed since last storm, and approximate amount of rainfall (inches).

c. A description of any inadequate BMPs.

d. If it is possible to safely access during inclement weather, list observations of all BMPs: erosion controls, sediment controls, chemical and waste controls, and non-storm water controls. Otherwise, list result of visual inspection at relevant outfall, discharge point, or downstream location and projected required maintenance activities.

e. Corrective actions required, including any changes to SWPPP necessary and implementation dates.

f. Inspectors name, title, and signature.

The dischargers shall prepare their inspection checklists using the inspection checklist form provided by the SWRCB or RWQCB or on forms that contain the equivalent information.

12. Training

Individuals responsible for SWPPP preparation, implementation, and permit compliance shall be appropriately trained, and the SWPPP shall document all training. This includes those personnel responsible for installation, inspection, maintenance, and repair of BMPs. Those responsible for overseeing, revising, and amending the SWPPP shall also document their training. Training should be both formal and informal, occur on an ongoing basis when it is appropriate and convenient, and should include training/workshops offered by the SWRCB, RWQCB, or other locally recognized agencies or professional organizations.

13. List of Contractors/Subcontractors

The SWPPP shall include a list of names of all contractors, (or subcontractors) and individuals responsible for implementation of the SWPPP. This list should include telephone numbers and addresses. Specific areas of responsibility of each subcontractor and emergency contact numbers should also be included.

14. Other Plans

This SWPPP may incorporate by reference the appropriate elements of other plans required by local, State, or Federal agencies. A copy of any requirements incorporated by reference shall be kept at the construction site.

15. Public Access

The SWPPP shall be provided, upon request, to the RWQCB. The SWPPP is considered a report that shall be available to the public by the RWQCB under section 308(b) of the Clean Water Act.

16. Preparer Certification

The SWPPP and each amendment shall be signed by the landowner (discharger) or his representative and include the date of initial preparation and the date of each amendment.

SECTION B: MONITORING PROGRAM AND REPORTING REQUIREMENTS

1. Required Changes

The RWQCB may require the discharger to conduct additional site inspections, to submit reports and certifications, or perform sampling and analysis.

2. Implementation

a. The requirements of this Section shall be implemented at the time of commencement of construction activity (see also Section A. 2. Implementation Schedule). The discharger is responsible for implementing these requirements until construction activity is complete and the site is stabilized.

b. For ongoing construction activity involving a change in ownership of property covered by this General Permit, the new owner must complete a NOI and implement the requirements of this Section concurrent with the change of ownership. For changes of information, the owner must follow instructions in C. 7. Special Provisions for Construction Activity of the General Permit.

3. Site Inspections

Qualified personnel shall conduct inspections of the construction site prior to anticipated storm events, during extended storm events, and after actual storm events to identify areas contributing to a discharge of storm water associated with construction activity. The name(s) and contact number(s) of the assigned inspection personnel shall be listed in the SWPPP. Pre-storm inspections are to ensure that BMPs are properly installed and maintained; post-storm inspections are to assure that the BMPs have functioned adequately. During extended storm events, inspections shall be required each 24-hour period. Best Management Practices (BMPs) shall be evaluated for adequacy and proper implementation and whether additional BMPs are required in accordance with the terms of the General Permit (see language in Section A. 11. Maintenance, Inspection, and Repair). Implementation of nonstorm water discharge BMPs shall be verified and their

effectiveness evaluated. One time discharges of non-storm water shall be inspected when such discharges occur.

4. Compliance Certification

Each discharger or qualified assigned personnel listed by name and contact number in the SWPPP must certify annually that construction activities are in compliance with the requirements of this General Permit and the SWPPP. This Certification shall be based upon the site inspections required in Item 3 of this Section. The certification must be completed by July 1 of each year.

5. Noncompliance Reporting

Dischargers who cannot certify compliance, in accordance with Item 4 of this Section and/or who have had other instances of noncompliance excluding exceedances of water quality standards as defined in section B. 3. Receiving Water Limitations Language, shall notify the appropriate RWQCB within 30 days. Corrective measures should be implemented immediately following discovery that water quality standards were exceeded. The notifications shall identify the noncompliance event, including an initial assessment of any impact caused by the event; describe the actions necessary to achieve compliance; and include a time schedule subject to the modifications by the RWQCB indicating when compliance will be achieved. Noncompliance notifications must be submitted within 30-calendar days of identification of noncompliance.

6. Monitoring Records

Records of all inspections, compliance certifications, and noncompliance reporting must be retained for a period of at least three years from the date generated. With the exception of noncompliance reporting, dischargers are not required to submit these records.

7. Monitoring Program for Sedimentation/Siltation

Dischargers of storm water associated with construction activity that directly enters a water body listed in Attachment 3 shall conduct a sampling and analysis program for the pollutants (sedimentation/siltation or turbidity) causing the impairment. The discharger shall monitor for the applicable parameter. If the water body is listed for sedimentation or siltation, samples should be analyzed for Settleable Solids (ml/l) and Total Suspended Solids (mg/l). Alternatively or in addition, samples may be analyzed for suspended sediment concentration according to ASTM D3977-97. If the water body is listed for turbidity, samples should be analyzed for turbidity (NTU). Discharges that flow through tributaries that are not listed in Attachment 3 or that flow into Municipal Separate Storm Sewer Systems (MS4) are not subject to these sampling and analysis requirements. The sampling and analysis parameters and procedures must be designed to determine whether the BMPs installed and maintained prevent discharges of sediment from contributing to impairment in receiving waters.

Samples shall be collected during the first two hours of discharge from rain events which result in a direct discharge to any water body listed in Attachment 3. Samples shall be collected during daylight hours (sunrise to sunset). Dischargers need not collect more than four (4) samples per month. All samples shall be taken in the receiving waters and shall be representative of the prevailing conditions of the water bodies. Samples shall be collected from safely accessible locations upstream of the construction site discharge and immediately downstream from the last point of discharge.

For laboratory analysis, all sampling, sample preservation, and analyses must be conducted according to test procedures under 40 CFR Part 136. Field samples shall be collected and analyzed according to the specifications of the manufacturer of the sampling devices employed. Portable meters shall be calibrated according to manufacturer's specification. All field and/or laboratory analytical data shall be kept in the SWPPP document, which is to remain at the construction site at all times until a Notice of Termination has been submitted and approved.

8. Monitoring Program for Pollutants Not Visually Detectable in Storm Water

A sampling and analysis program shall be developed and conducted for pollutants which are not visually detectable in storm water discharges, which are or should be known to occur on the construction site, and which could cause or contribute to an exceedance of water quality objectives in the receiving water. Pollutants that should be considered for inclusion in this sampling and analysis program are those identified in Sections A.5.b. and A.5.c.

Construction materials and compounds that are not stored in water-tight containers under a water-tight roof or inside a building are examples of materials for which the discharger may have to implement sampling and analysis procedures. The goal of the sampling and analysis is to determine whether the BMPs employed and maintained on site are effective in preventing the potential pollutants from coming in contact with storm water and causing or contributing to an exceedance of water quality objectives in the receiving waters. Examples of construction sites that may require sampling and analysis include: sites that are known to have contaminants spilled or spread on the ground; sites where construction practices include the application of soil amendments, such as gypsum, which can increase the pH of the runoff; or sites having uncovered stockpiles of material exposed to storm water. Visual observations before, during, and after storm events may trigger the requirement to collect samples. Any breach, malfunction, leakage, or spill observed which could result in the discharge of pollutants to surface waters that *would* not be visually detectable in storm water shall trigger the collection of a sample of discharge. Samples shall be collected at all discharge locations which drain the areas identified by the visual observations and which can be safely accessed. For sites where sampling and analysis is required, personnel trained in water quality sampling procedures shall collect storm water samples. A sufficiently large sample of storm water that has not come in contact with the disturbed soil or the materials stored or used on-site

(uncontaminated sample) shall be collected for comparison with the discharge sample. Samples shall be collected during the first two hours of discharge from rain events that occur during daylight hours and which generate runoff.

The uncontaminated sample shall be compared to the samples of discharge using field analysis or through laboratory analysis. Analyses may include, but are not limited to, indicator parameters such as: pH, specific conductance, dissolved oxygen, conductivity, salinity, and TDS.

For laboratory analysis, all sampling, sample preservation, and analyses must be conducted according to test procedures under 40 CFR Part 136. Field discharge samples shall be collected and analyzed according to the specifications of the manufacturer of the sampling devices employed. Portable meters shall be calibrated according to manufacturer's specification. All field and/or analytical data shall be kept in the SWPPP document, which is to remain at the construction site at all times until a *Notice of* Termination has been submitted and approved.

SECTION C: STANDARD PROVISIONS FOR CONSTRUCTION ACTIVITY

1. Duty to Comply

The discharger must comply with all of the conditions of this General Permit. Any permit noncompliance constitutes a violation of the Clean Water Act (CWA) and the Porter-Cologne Water Quality Control Act and is grounds for enforcement action and/or removal from General Permit coverage.

The discharger shall comply with effluent standards or prohibitions established under Section 307(a) of the CWA for toxic pollutants within the time provided in the regulations that establish these standards or prohibitions, even if this General Permit has not yet been modified to incorporate the requirement.

2. General Permit Actions

This General Permit may be modified, revoked and reissued, or terminated for cause. The filing of a request by the discharger for a General Permit modification, revocation and reissuance, or termination, or a notification of planned changes or anticipated noncompliance does not annul any General Permit condition.

If any toxic effluent standard or prohibition (including any schedule of compliance specified in such effluent standard or prohibition) is promulgated under Section 307(a) of the CWA for a toxic pollutant which is present in the discharge and that standard or prohibition is more stringent than any limitation on the pollutant in this General Permit, this General Permit shall be modified or revoked and reissued to conform to the toxic effluent standard or prohibition and the dischargers so notified.

3. Need to Halt or Reduce Activity Not a Defense

It shall not be a defense for a discharger in an enforcement action that it would have been necessary to halt or reduce the permitted activity in order to maintain compliance with the conditions of this General Permit.

4. Duty to Mitigate

The discharger shall take all responsible steps to minimize or prevent any discharge in violation of this General Permit, which has a reasonable likelihood of adversely affecting human health or the environment.

5. Proper Operation and Maintenance

The discharger shall at all times properly operate and maintain any facilities and systems of treatment and control (and related appurtenances) which are installed or used by the discharger to achieve compliance with the conditions of this General Permit and with the requirements of Storm Water Pollution Prevention Plans (SWPPP). Proper operation and maintenance also includes adequate laboratory controls and appropriate quality assurance procedures. Proper operation and maintenance may require the operation of backup or auxiliary facilities or similar systems installed by a discharger when necessary to achieve compliance with the conditions of this General Permit.

6. Property Rights

This General Permit does not convey any property rights of any sort or any exclusive privileges, nor does it authorize any injury to private property or any invasion of personal rights, nor does it authorize any infringement of Federal, State, or local laws or regulations.

7. Duty to Provide Information

The discharger shall furnish the RWQCB, State Water Resources Control Board, or USEPA, within a reasonable time, any requested information to determine compliance with this General Permit. The discharger shall also furnish, upon request, copies of records required to be kept by this General Permit.

8. Inspection and Entry

The discharger shall allow the RWQCB, SWRCB, USEPA, and/or, in the case of construction sites which discharge through a municipal separate storm sewer, an authorized representative of the municipal operator of the separate storm sewer system receiving the discharge, upon the presentation of credentials and other documents as may be required by law, to:

a. Enter upon the discharger's premises at reasonable times where a regulated construction activity is being conducted or where records must be kept under the conditions of this General Permit;

b. Access and copy at reasonable times any records that must be kept under the conditions of this General Permit;

c. Inspect at reasonable times the complete construction site, including any off-site staging areas or material storage areas, and the erosion/sediment controls; and

d. Sample or monitor at reasonable times for the purpose of ensuring General Permit compliance.

9. Signatory Requirements

a. All Notice of Intents (NOIs), Notice of Terminations (NOTs), SWPPPs, certifications, and reports prepared in accordance with this Order submitted to the SWRCB shall be signed as follows:

(1) For a corporation: by a responsible corporate officer. For the purpose of this Section, a responsible corporate officer means: (a) a president, secretary, treasurer, or vice president of the corporation in charge of a principal business function, or any other person who performs similar policy or decision-making functions for the corporation, or (b) the manager of the construction activity if authority to sign documents has been assigned or delegated to the manager in accordance with corporate procedures;

(2) For a partnership or sole proprietorship: by a general partner or the proprietor, respectively; or

(3) For a municipality, State, Federal, or other public agency: by either a principal executive officer, ranking elected official, or duly authorized representative. The principal executive officer of a Federal agency includes the chief executive officer of the agency or the senior executive officer having responsibility for the overall operations of a principal geographic unit of the agency (e.g., Regional Administrator of USEPA).

b. All SWPPPs, reports, certifications, or other information required by the General Permit and/or requested by the RWQCB, SWRCB, USEPA, or the local storm water management agency shall be signed by a person described above or by a duly authorized representative. A person is a duly authorized representative if:

(1) The authorization is made in writing by a person described above and retained as part of the SWPPP; or

(2) The authorization specifies either an individual or a position having responsibility for the overall operation of the construction activity, such as the position of manager, operator, superintendent, or position of equivalent responsibility, or an individual or position having overall responsibility for environmental matters for the company. (A duly authorized representative may thus be either a named individual or any individual occupying a named position).

c. If an authorization is no longer accurate because a different individual or position has responsibility for the overall operation of the construction activity, a new authorization must be attached to the SWPPP prior to submittal of any reports, information, or certifications to be signed by the authorized representative.

10. Certification

Any person signing documents under Section C, Provision 9 above, shall make the following certification:

"I certify under penalty of law that this document and all attachments were prepared under my direction or supervision in accordance with a system designed to assure that qualified personnel properly gather and evaluate the information submitted. Based on my inquiry of the person or persons who manage the system or those persons directly responsible for gathering the information, to the best of my knowledge and belief, the information submitted is, true, accurate, and complete.

I am aware that there are significant penalties for submitting false information, including the possibility of fine and imprisonment for knowing violations."

11. Anticipated Noncompliance

The discharger will give advance notice to the RWQCB and local storm water management agency of any planned changes in the construction activity which may result in noncompliance with General Permit requirements.

12. Penalties for Falsification of Reports

Section 309(c)(4) of the CWA provides that any person who knowingly makes any false material statement, representation, or certification in any record or other document submitted or required to be maintained under this General Permit, including reports of compliance or noncompliance shall upon conviction, be punished by a fine of not more than $10,000 or by imprisonment for not more than two years or by both.

13. Oil and Hazardous Substance Liability

Nothing in this General Permit shall be construed to preclude the institution of any legal action or relieve the discharger from any responsibilities, liabilities, or penalties to which the discharger is or may be subject to under Section 311 of the CWA.

14. Severability

The provisions of this General Permit are severable; and, if any provision of this General Permit or the application of any provision of this General Permit to any circumstance is held invalid, the application of such provision to other circumstances and the remainder of this General Permit shall not be affected thereby.

15. Reopener Clause

This General Permit may be modified, revoked and reissued, or terminated for cause due to promulgation of amended regulations, receipt of USEPA guidance concerning regulated activities, judicial decision, or in accordance with 40 Code of Federal Regulations (CFR) 122.62, 122.63, 122.64, and 124.5.

16. Penalties for Violations of Permit Conditions

a. Section 309 of the CWA provides significant penalties for any person who violates a permit condition implementing Sections 301, 302, 306, 307, 308, 318, or 405 of the CWA or any permit condition or limitation implementing any such section in a permit issued under Section 402. Any person who violates any permit condition of this General Permit is subject to a civil penalty not to exceed $27,500 per calendar day of such violation, as well as any other appropriate sanction provided by Section 309 of the CWA.

b. The Porter-Cologne Water Quality Control Act also provides for civil and criminal penalties which in some cases are greater than those under the CWA.

17. Availability

A copy of this General Permit shall be maintained at the construction site during construction activity and be available to operating personnel.

18. Transfers

This General Permit is not transferable. A new owner of an ongoing construction activity must submit a NOI in accordance with the requirements of this General Permit to be authorized to discharge under this General Permit. An owner who sells property covered

by this General Permit shall inform the new owner of the duty to file a NOI and shall provide the new owner with a copy of this General Permit.

19. Continuation of Expired Permit

This General Permit continues in force and effect until a new General Permit is issued or the SWRCB rescinds this General Permit. Only those dischargers authorized to discharge under the expiring General Permit are covered by the continued General Permit.

SWRCB AND RWQCB CONTACT LIST

Please see Storm Water Contacts at
http://www.swrcb.ca.gov/stormwtr/contact.html

NOTICE OF INTENT (NOI) TO COMPLY WITH THE TERMS OF THE GENERAL PERMIT TO DISCHARGE STORM WATER ASSOCIATED WITH CONSTRUCTION ACTIVITY

GENERAL INSTRUCTIONS

Who Must Submit

Discharges of storm water associated with construction that results in the disturbance of one acre or more of land must apply for coverage under the General Construction Activities Storm Water Permit (General Permit). Construction activity which is a part of a larger common area of development or sale must also be permitted. (For example, if 4 acres of a 20-acre subdivision is disturbed by construction activities, and the remaining 16 acres is to be developed at a future date, the property owner must obtain a General Storm Water Permit for the 4-acre project). Construction activity includes, but is not limited to: clearing, grading, demolition, excavation, construction of new structures, and reconstruction of existing facilities involving removal and replacement that results in soil disturbance. This includes construction access roads, staging areas, storage areas, stockpiles, and any off-site areas which receive run-off from the construction project such as discharge points into a receiving water. Construction activity does not include routine maintenance to maintain original line and grade, hydraulic capacity, or original purpose of the facility.

The owner of the land where the construction activity is occurring is responsible for obtaining a permit. Owners may obtain coverage under the General Permit by filing a NOI in accordance with the following instructions. Coverage for construction activity conducted on easements (e.g., pipeline construction) or on nearby properties by agreement or permission, or by an owner or lessee of a mineral estate (oil, gas, geothermal, aggregate, precious metals, and/or industrial minerals) entitled to conduct the activities, shall be obtained by the entity responsible for the construction activity. Linear construction projects which will have construction activity occurring in one or more than one Region should contact the State Water Resources Control Board at the number listed below prior to submitting an NOI application for specific information related to the use of the NOI form.

Construction Activity Not Covered By This General Permit

Storm water discharges in the Lake Tahoe Hydrologic Unit will be regulated by a separate permit(s) adopted by the California Regional Water Quality Control Board, Lahontan Region, and will not be covered under the State Water Resources Control Board's (SWRCB) General Permit. Storm water discharges on Indian Lands will be regulated by the U.S. Environmental Protection Agency.

Where to Apply

The NOI form, vicinity map, and appropriate fee must be mailed to the SWRCB at the following address:

State Water Resources Control Board
Division of Water Quality
Attn: Storm Water Permit Unit
P.O. Box 1977
Sacramento, CA 95812-1977

When to Apply

Property owners proposing to conduct construction activities subject to this General Permit must file a Notice of Intent prior to the commencement of construction activity.

Fees

The annual fee is $700 for all construction sites submitting an NOI. Checks should be made payable to: SWRCB.

Completing the Notice of Intent (NOI)

The submittal to obtain coverage under the General Permit must include a completed NOI Form (Notice of Intent, attached), a vicinity map, and the appropriate annual fee. The NOI must be completely and accurately filled out; the vicinity map and annual fee must be included with the NOI or the submittal is considered incomplete and will be rejected. A construction site is considered to be covered by the General Permit upon filing a complete NOI submittal, and implementation of a defensible Storm Water Pollution Prevention Plan (SWPPP). Upon receipt of a complete NOI submittal, each discharger will be sent a receipt letter containing the waste discharger's identification (WDID) number.

Questions?

If you have any questions on completing the NOI please call the SWRCB at (916) 341-5537.

NOI-LINE-BY-LINE INSTRUCTIONS

Please type or print when completing the NOI Form and vicinity map.

SECTION I--NOI STATUS

Mark one of the two boxes at the top portion of the NOI. Check box 1 if the NOI is being completed for new construction. Check box 2 if the NOI is being submitted to report changes for a construction site already covered by the General Permit. An example of a change that warrants a resubmittal of the NOI is a change of total area of the construction site. The permit is non-transferable, a change of ownership requires a Notice of Termination (NOT) submittal and a new NOI. Complete only those portions of the NOI that apply to the changes (the NOI must always be signed). If box 2 is checked, the WDID number must be included.

SECTION II--PROPERTY OWNER

Enter the construction site owner's official or legal name and address; contact person (if other than owner), title, and telephone number.

SECTION III--DEVELOPER / CONTRACTOR INFORMATION

Enter the name of the developer's (or general contractor's) official or legal name, address, contact person, title, and telephone number. The contact person should be someone who is familiar with the construction site and is responsible for compliance and oversight of the general permit.

SECTION IV-CONSTRUCTION PROJECT INFORMATION

Enter the project name, site address, county, city, (or nearest city if construction is occurring in an unincorporated area), zip code, and telephone number (if any) of the construction site. Include an emergency contact telephone or pager number. Construction site information should include latitude and longitude designations, tract numbers, and/or mile post markers, if applicable. The site contact person should be someone who is familiar with the project, site plans, SWPPP, and monitoring program. All NOIs must be accompanied by a vicinity map.

Part A: Enter the total size in acres of all areas associated with construction activity, including all access roads.

Part B: Enter the total size in acres of the area to be disturbed by construction activity and the percentage of the area listed in Part A above that this represents.

Part C: Enter the percentage of the site that is impervious (areas where water cannot soak into the ground, such as concrete, asphalt, rooftops, etc.) before and after construction.

Part D: Include tract numbers, if available.

Part E: Enter the mile post marker number at the project site location.

Part F: Indicate whether the construction site is part of a larger common plan of development or sale. For example, if the construction activity is occurring on a two-acre site which is within a development that is one acre or greater, answer yes.

Part G: Enter the name of the development (e.g. "Quail Ridge Subdivision", "Orange Valley Estates", etc.).

Part H: Indicate when construction will begin (month, day, year). When a NOI is being submitted due to a change in ownership, the commencement date should be the date the new ownership took effect.

Part I: Indicate the percentage of the total project area to be mass graded.

Part J: Enter the estimated completion dates for the mass grading activities and for the project completion.

Part K: Indicate the type(s) of construction taking place. For example, “Transportation” should be checked for the construction of roads; “Utility” should be checked for installation of sewer, electric, or telephone systems. Include a description of the major construction activities, (e.g., 20 single family homes, a supermarket, an office building, a factory, etc.)

SECTION V--BILLING ADDRESS

To continue coverage under the General Permit, the annual fee must be paid. Indicate where the annual fee invoice should be mailed by checking one of the following boxes:

Owner: sent to the owners address as it appears in Section II.

Developer/Contractor: sent to the developer's address as it appears in Section III.

Other: sent to a different address and enter that address in the spaces provided.

SECTION VI--REGULATORY STATUS

Indicate whether or not the site is subject to local erosion/sediment control ordinances. Indicate whether the erosion/sediment control plan designed to comply with the ordinance addresses the construction of infrastructure and structures in addition to grading. Identify the name and telephone number of the local agency, if applicable.

SECTION VII--RECEIVING WATER INFORMATION

Part A: Indicate whether the storm water runoff from the construction site discharges indirectly to waters of the United States, directly to waters of the United States, or to a separate storm drain system.

Indirect discharges include discharges that may flow overland across adjacent properties or rights-of-way prior to discharging into waters of the United States.

Enter the name of the owner/operator of the relevant storm drain system, if applicable. Storm water discharges directly to waters of the United States will typically have an outfall structure directly from the facility to a river, lake, creek, stream, bay, ocean, etc. Discharges to separate storm sewer systems are those that discharge to a collection system operated by municipalities, flood control districts, utilities, or similar entities.

Part B: Enter the name of the receiving water. Regardless of point of discharge, the owner must determine the receiving water for the construction site's storm water discharge. Enter the name of the receiving water.

SECTION VIII--IMPLEMENTATION OF NPDES PERMIT REQUIREMENTS

Part A: Indicate the status of the SWPPP, date prepared, or availability for review. Also indicate if a tentative construction schedule has been included in the SWPPP (the inclusion of a construction activity schedule is a mandatory SWPPP requirement).

Part B: Provide information concerning the status of the development of a monitoring program, a component of the SWPPP which outlines an inspection and maintenance schedule for the proposed Best Management Practices (BMPs). Provide name and phone number of program preparer.

Part C: Provide the name and phone numbers of the responsible party or parties designated to insure compliance with all elements of the General Permit and SWPPP.

SECTION IX--VICINITY MAP AND FEE

Provide a “to scale” or "to approximate scale" drawing of the construction site and the immediate surrounding area. Whenever possible, limit the map to an 8.5” x 11’ or 11" x 17" sheet of paper. At a minimum, the map must show the site perimeter, the geographic features surrounding the site, and general topography, and a north arrow. The map must also include the location of the construction project in relation to named streets, roads, intersections, or landmarks. A NOI containing a map which does not clearly indicate the location of the construction project will be rejected. Do not submit blueprints unless they meet the above referenced size limits.

SECTION X--CERTIFICATIONS

This section must be completed by the owner or signatory agent of the construction site*. The certification provides assurances that the NOI and vicinity map were completed in an accurate and complete fashion and with the knowledge that penalties exist for providing false information. Certification also requires the owner to comply with the provisions in the General Permit.

* For a corporation: a responsible corporate officer (or authorized individual). For a partnership or sole proprietorship: a general partner or the proprietor, respectively. For a municipality, State, Federal, or other public agency: either a principal executive officer, ranking elected official, or duly authorized representative.

Attachment 2

State Water Resources Control Board

NOTICE OF INTENT

TO COMPLY WITH THE TERMS OF THE
GENERAL PERMIT TO DISCHARGE STORM WATER
ASSOCIATED WITH CONSTRUCTION ACTIVITY (WQ ORDER No. 99-08-DWQ)

I. NOI STATUS (SEE INSTRUCTIONS)

MARK ONLY ONE ITEM 1. ☐ New Construction 2. ☐ Change of Information for WDID#

II. PROPERTY OWNER

Name	Contact Person		
Mailing Address	Title		
City	State	Zip	Phone ( ) --

III. DEVELOPER/CONTRACTOR INFORMATION

Developer/Contractor	Contact Person		
Mailing Address	Title		
City	State	Zip	Phone ( ) --

IV. CONSTRUCTION PROJECT INFORMATION

Site/Project Name	Site Contact Person		
Physical Address/Location	Latitude _____°	Longitude _____°	County
City (or nearest City)	Zip	Site Phone Number ( ) --	Emergency Phone Number ( ) --

A. Total size of construction site area: _____ Acres

B. Total area to be disturbed: _____ Acres (% of total _____)

C. Percent of site imperviousness (including rooftops):

Before Construction: _____%

After Construction: _____%

D. Tract Number(s): _____, _____

E. Mile Post Marker: _____

F. Is the construction site part of a larger common plan of development or sale?

☐ YES ☐ NO

G. Name of plan or development:

H. Construction commencement date: _____/_____/_____

I. % of site to be mass graded: _____

J. Projected construction dates:

Complete grading: _____/_____/_____ Complete project: _____/_____/_____

K. Type of Construction (Check all that apply):

1. ☐ Residential 2. ☐ Commercial 3. ☐ Industrial 4. ☐ Reconstruction 5. ☐ Transportation

6. ☐ Utility Description: _____ 7. ☐ Other (Please List): _____

V. BILLING INFORMATION

SEND BILL TO: ☐ OWNER (as in II. above)	Name	Contact Person	
☐ DEVELOPER (as in III. above)	Mailing Address	Phone/Fax	
☐ OTHER (enter information at right)	City	State	Zip

VI. REGULATORY STATUS

A. Has a local agency approved a required erosion/sediment control plan?..... ☐ YES ☐ NO

Does the erosion/sediment control plan address construction activities such as infrastructure and structures?..... ☐ YES ☐ NO

Name of local agency: _____ Phone: ( ) --

B. Is this project or any part thereof, subject to conditions imposed under a CWA Section 404 permit of 401 Water Quality Certification?..... ☐ YES ☐ NO

If yes, provide details: _____

VII. RECEIVING WATER INFORMATION

A. Does the storm water runoff from the construction site discharge to (Check all that apply):

1. ☐ **Indirectly to waters of the U.S.**

2. ☐ **Storm drain system - Enter owner's name:**_____

3. ☐ **Directly to waters of U.S. (e.g. , river, lake, creek, stream, bay, ocean, etc.)**

B. Name of receiving water: (river, lake, creek, stream, bay, ocean): _____

VIII. IMPLEMENTATION OF NPDES PERMIT REQUIREMENTS

A. STORM WATER POLLUTION PREVENTION PLAN (SWPPP) (check one)

☐ A SWPPP has been prepared for this facility and is available for review: Date Prepared: ____/____/____ Date Amended: ____/____/____

☐ A SWPPP will be prepared and ready for review by (enter date): ____/____/____

☐ A tentative schedule has been included in the SWPPP for activities such as grading, street construction, home construction, etc.

B. MONITORING PROGRAM

☐ A monitoring and maintenance schedule has been developed that includes inspection of the construction BMPs before anticipated storm events and after actual storm events and is available for review.

If checked above: A qualified person has been assigned responsibility for pre-storm and post-storm BMP inspections to identify effectiveness and necessary repairs or design changes..... ☐ YES ☐ NO

Name: _____ Phone: ( ) --

C. PERMIT COMPLIANCE RESPONSIBILITY

A qualified person has been assigned responsibility to ensure full compliance with the Permit, and to implement all elements of the Storm Water Pollution Prevention Plan including:

1. Preparing an annual compliance evaluation..... ☐ YES ☐ NO

Name: _____ Phone: ( ) --

2. Eliminating all unauthorized discharges..... ☐ YES ☐ NO

IX. VICINITY MAP AND FEE (must show site location in relation to nearest named streets, intersections, etc.)

Have you included a vicinity map with this submittal? ..... ☐ YES ☐ NO

Have you included payment of the annual fee with this submittal?..... ☐ YES ☐ NO

X. CERTIFICATIONS

"I certify under penalty of law that this document and all attachments were prepared under my direction and supervision in accordance with a system designed to assure that qualified personnel properly gather and evaluate the information submitted. Based on my inquiry of the person or persons who manage the system, or those persons directly responsible for gathering the information, the information submitted is, to the best of my knowledge and belief, true, accurate, and complete. I am aware that there are significant penalties for submitting false information, including the possibility of fine or imprisonment. In addition, I certify that the provisions of the permit, including the development and implementation of a Storm Water Pollution Prevention Plan and a Monitoring Program Plan will be complied with."

Printed Name: _____

Signature: _____ **Date:** _____

Title: _____

ATTACHMENT 3

303d Listed Water Bodies for Sedimentation

REGION	WATER BODY NAME	CODE	POLLUTANT
1	MATTOLE RIVER	1100	Sedimentation/Siltation
1	TRINITY RIVER, SOUTH FORK	1100	Sedimentation/Siltation
1	REDWOOD CREEK	1100	Sedimentation/Siltation
1	MAD RIVER	1100	Sedimentation/Siltation
1	ELK RIVER	1100	Sedimentation/Siltation
1	EEL RIVER, SOUTH FORK	1100	Sedimentation/Siltation
1	EEL RIVER, NORTH FORK	1100	Sedimentation/Siltation
1	TRINITY RIVER	1100	Sedimentation/Siltation
1	EEL RIVER, MIDDLE FORK	1100	Sedimentation/Siltation
1	MAD RIVER	2500	Turbidity
1	TEN MILE RIVER	1100	Sedimentation/Siltation
1	NOYO RIVER	1100	Sedimentation/Siltation
1	BIG RIVER	1100	Sedimentation/Siltation
1	ALBION RIVER	1100	Sedimentation/Siltation
1	NAVARRO RIVER	1100	Sedimentation/Siltation
1	GARCIA RIVER	1100	Sedimentation/Siltation
1	GUALALA RIVER	1100	Sedimentation/Siltation
1	RUSSIAN RIVER	1100	Sedimentation/Siltation
1	TOMKI CREEK	1100	Sedimentation/Siltation
1	VAN DUZEN RIVER	1100	Sedimentation/Siltation
1	EEL RIVER DELTA	1100	Sedimentation/Siltation
1	EEL RIVER, MIDDLE MAIN FORK	1100	Sedimentation/Siltation
1	ESTERO AMERICANO	1100	Sedimentation/Siltation
1	NAVARRO RIVER DELTA	1100	Sedimentation/Siltation
1	EEL RIVER, UPPER MAIN FORK	1100	Sedimentation/Siltation
1	FRESHWATER CREEK	1100	Sedimentation/Siltation
1	SCOTT RIVER	1100	Sedimentation/Siltation
2	TOMALES BAY	1100	Sedimentation/Siltation
2	NAPA RIVER	1100	Sedimentation/Siltation
2	SONOMA CREEK	1100	Sedimentation/Siltation
2	PETALUMA RIVER	1100	Sedimentation/Siltation
2	LAGUNITAS CREEK	1100	Sedimentation/Siltation
2	WALKER CREEK	1100	Sedimentation/Siltation
2	SAN GREGORIO CREEK	1100	Sedimentation/Siltation

2	SAN FRANCISQUITO CREEK	1100	Sedimentation/Siltation
2	PESCADERO CREEK (REG 2)	1100	Sedimentation/Siltation
2	BUTANO CREEK	1100	Sedimentation/Siltation
3	MORRO BAY	1100	Sedimentation/Siltation
3	SAN LORENZO RIVER ESTUARY	1100	Sedimentation/Siltation
3	SHINGLE MILL CREEK	1100	Sedimentation/Siltation
3	MOSS LANDING HARBOR	1100	Sedimentation/Siltation
3	WATSONVILLE SLOUGH	1100	Sedimentation/Siltation
3	SAN LORENZO RIVER	1100	Sedimentation/Siltation
3	ELKHORN SLOUGH	1100	Sedimentation/Siltation
3	SALINAS RIVER LAGOON (NORTH)	1100	Sedimentation/Siltation
3	GOLETA SLOUGH/ESTUARY	1100	Sedimentation/Siltation
3	CARPINTERIA MARSH (EL ESTERO MARSH)	1100	Sedimentation/Siltation
3	LOMPICO CREEK	1100	Sedimentation/Siltation
3	MORO COJO SLOUGH	1100	Sedimentation/Siltation
3	VALENCIA CREEK	1100	Sedimentation/Siltation
3	PAJARO RIVER	1100	Sedimentation/Siltation
3	RIDER GULCH CREEK	1100	Sedimentation/Siltation
3	LLAGAS CREEK	1100	Sedimentation/Siltation
3	SAN BENITO RIVER	1100	Sedimentation/Siltation
3	SALINAS RIVER	1100	Sedimentation/Siltation
3	CHORRO CREEK	1100	Sedimentation/Siltation
3	LOS OSOS CREEK	1100	Sedimentation/Siltation
3	SANTA YNEZ RIVER	1100	Sedimentation/Siltation
3	SAN ANTONIO CREEK (SANTA BARBARA COUNTY)	1100	Sedimentation/Siltation
3	CARBONERA CREEK	1100	Sedimentation/Siltation
3	SOQUEL LAGOON	1100	Sedimentation/Siltation
3	APTOS CREEK	1100	Sedimentation/Siltation
4	MUGU LAGOON	1100	Sedimentation/Siltation
5	HUMBUG CREEK	1100	Sedimentation/Siltation
5	PANOCHE CREEK	1100	Sedimentation/Siltation
5	FALL RIVER (PIT)	1100	Sedimentation/Siltation
6	BEAR CREEK (R6)	1100	Sedimentation/Siltation
6	MILL CREEK (3)	1100	Sedimentation/Siltation
6	HORSESHOE LAKE (2)	1100	Sedimentation/Siltation
6	BRIDGEPORT RES	1100	Sedimentation/Siltation
6	TOPAZ LAKE	1100	Sedimentation/Siltation
6	LAKE TAHOE	1100	Sedimentation/Siltation

6	PINE CREEK (2)	1100	Sedimentation/Siltation
6	TRUCKEE RIVER	1100	Sedimentation/Siltation
6	CLEARWATER CREEK	1100	Sedimentation/Siltation
6	GRAY CREEK (R6)	1100	Sedimentation/Siltation
6	WARD CREEK	1100	Sedimentation/Siltation
6	BLACKWOOD CREEK	1100	Sedimentation/Siltation
6	GOODALE CREEK	1100	Sedimentation/Siltation
6	EAST WALKER RIVER	1100	Sedimentation/Siltation
6	HEAVENLY VALLEY CREEK	1100	Sedimentation/Siltation
6	WOLF CREEK (1)	1100	Sedimentation/Siltation
6	WEST WALKER RIVER	1100	Sedimentation/Siltation
6	HOT SPRINGS CANYON CREEK	1100	Sedimentation/Siltation
6	BRONCO CREEK	1100	Sedimentation/Siltation
6	SQUAW CREEK	1100	Sedimentation/Siltation
7	IMPERIAL VALLEY DRAINS	1100	Sedimentation/Siltation
7	NEW RIVER (R7)	1100	Sedimentation/Siltation
7	ALAMO RIVER	1100	Sedimentation/Siltation
8	SAN DIEGO CREEK, REACH 1	1100	Sedimentation/Siltation
8	RATHBONE (RATHBUN) CREEK	1100	Sedimentation/Siltation
8	SAN DIEGO CREEK, REACH 2	1100	Sedimentation/Siltation
8	UPPER NEWPORT BAY ECOLOGICAL RESERVE	1100	Sedimentation/Siltation
8	BIG BEAR LAKE	1100	Sedimentation/Siltation
8	ELSINORE, LAKE	1100	Sedimentation/Siltation
9	SAN ELIJO LAGOON	1100	Sedimentation/Siltation
9	LOS PENASQUITOS LAGOON	1100	Sedimentation/Siltation
9	AGUA HEDIONDA LAGOON	1100	Sedimentation/Siltation
9	BUENA VISTA LAGOON	1100	Sedimentation/Siltation

NEW OWNER INFORMATION AND
CHANGE OF INFORMATION (COI) FORM FOR THE
GENERAL CONSTRUCTION PERMIT NO. CAS000002

Owners Name: _____ Date: _____
WDID No.: _____ Date of Last NOI Change: _____
Prepared By: _____ Signature of Preparer: _____

	Area Transferred (acres)[1] column 1	Area Remaining (acres)[2] column 2	Lot/Tract Numbers Transferred	Contact Person and Company Name of NewOwner(s)	Address(es) of the New Owner(s)	Phone # of New Owner	Is Const/Post Construction Complete? Yes/No	Date of Ownership Transfer
1								
2								
3								
4								
5								
6								
7								
8								
9								
10								

[1]Use approximate area (in acres) if no exact figure is available.
[2]Calculate running total in this column as follows:
Enter in column 2, line 1, the area from NOI minus the area in column 1.
Enter in column 2, line 2, the area in column 2, line 1, minus the area in line 2, column 1.
Enter in column 2, line 3, the area in column 2, line 2, minus the area in line 3, column 1, and so forth.

Appendix B
SWPPP Template

CALIFORNIA STORMWATER BMP HANDBOOK

CONSTRUCTION

STORM WATER

POLLUTION

PREVENTION

PLAN

TEMPLATE

CALIFORNIA STORMWATER BEST MANAGEMENT PRACTICES HANDBOOK
CONSTRUCTION

REQUIREMENTS FOR A
STORM WATER POLLUTION PREVENTION PLAN

A Storm Water Pollution Prevention Plan (SWPPP) must be developed and implemented for construction projects that disturb one (1) acre or more, in accordance with the following:

(1) *State Water Resources Control Board (SWRCB) Order No. 99-08-DWQ, National Pollutant Discharge Elimination System (NPDES) Permit No. CAS000002, Waste Discharge Requirements (WDRs) for Discharges of Storm Water Runoff Associated with Construction Activity (General Permit)*;

(2) *State Water Resources Control Board Resolution No. 2001- 046, Modification of Water Quality Order 99-08-DWQ State Water Resources Control Board (SWRCB) National Pollutant Discharge Elimination System (NPDES) General Permit for Storm Water Discharges Associated with Construction Activity (General Permit)*; and

(3) *State Water Resources Control Board Resolution No. 2001-155, Modification of Water Quality Order 99-08-DWQ State Water Resources Control Board (SWRCB) National Pollutant Discharge Elimination System (NPDES) General Permit for Storm Water Discharges Associated with Construction Activity (General Permit) to include Small Construction Activity (One to Five Acres)*

The purpose of the SWPPP is to identify potential pollutant sources that may affect the quality of discharges associated with construction activity; to identify non-storm water discharges, and to design the use and placement of Best Management Practices (BMPs) to effectively prohibit the entry of pollutants from the construction site into the storm drain system during construction. Erosion and sediment source control BMPs must be considered for both active and inactive (previously disturbed) construction areas. BMPs for wind erosion and dust control are also included. The SWPPP will likely require modification as the project progresses and as conditions warrant.

The template herein is provided for information purposes to assist Developers/Contractors in preparing a SWPPP. Other SWPPP templates developed by individual agencies may also be used.

Prior to the issuance of any construction/grading permit for private projects subject to the General Permit, the Developer/Contractor must provide proof of submittal of a Notice of Intent (NOI) to the Regional Water Quality Control Board (RWQCB) to comply with the General Permit.

Prior to the commencement of any clearing, grading or excavation of any public works project subject to the General Permit, a SWPPP will be prepared and implemented. The template herein can be used for preparing the SWPPP.

The Owner/Developer/Contractor is responsible for ensuring that all project Contractors and subcontractors implement all applicable BMPs.

The Storm Water Pollution Prevention Plan and BMPs (EC, SE, WM, etc.) referenced are from the following sources:

> California Stormwater BMP Handbook - Construction, 2003 Edition. The Handbooks may be downloaded from the California Stormwater BMP Handbook web site at www.cabmphandbook.com.

INSTRUCTIONS

- The title page shall have the following information:
  - ❑ Title: "Storm Water Pollution Prevention Plan"
  - ❑ Project Name
  - ❑ Project Grading Permit Number, Building Permit Number, Tract Number, CUP, SUP, and/or APN
  - ❑ Project Owner/Developer/Contractor
  - ❑ Owner/Developer/Contractor's Name, Address, Telephone Number and Authorized Representative
  - ❑ Job Site Location/Address and Telephone Number, if Any
  - ❑ Identification and address of Lead Agency (City or County Agency)
  - ❑ Name of Contractor's Storm Water Pollution Prevention Manager (SWPPM). This person shall be responsible for SWPPP implementation, inspection and repairs.
  - ❑ Name of the Consulting Engineering company that prepared the SWPPP (if it was prepared by an outside consultant), including name and title of preparer
  - ❑ SWPPP Preparation Date
  - ❑ Estimated dates for start and end of construction
  - ❑ WDID Number

- A template title page is provided below.

REQUIRED TEXT:

Storm Water Pollution Prevention Plan

For:

Start Here…Triple Click here to insert Project Name-then TAB to next field

INSERT GRADING PERMIT NO., BUILDING PERMIT NO., TRACT NUMBER, CUP, SUP AND/OR APN -THEN TAB TO NEXT FIELD.

Prepared for:

Insert Name of Lead Agency-then TAB.
Insert Address 1 and press ENTER to insert Address 2 or TAB to next field.
Insert City, State, ZIP-then TAB.
Insert [City] Engineer's Name-then TAB.
Insert Engineer's Telephone Number-then TAB.

Owner/Developer/Contractor:

Insert Owner/Developer/Contractor's Company Name-then TAB.
Insert Address 1 then press ENTER to insert Address 2 or TAB to next field.
Insert City, State, ZIP-then TAB.
Insert Telephone-then TAB.
Insert Owner/Developer/Contractor's Representative's Name-then TAB.

Project Site Location/Address:

Insert project site address if any. Press the DELETE key if not and TAB to next field.
Insert job site telephone number, if any. Press the DELETE key if not and TAB to next field.

Contractor's Storm Water Pollution Prevention Manager

Insert SWPPM's Name-then TAB.
Insert Telephone Number(s)-then TAB.

SWPPP Prepared by:

Insert Company Name-then TAB.
Insert Address-then TAB.
Insert City, State, ZIP-then TAB.
Insert Telephone-then TAB
Insert Name and Title of Preparer-then TAB.

SWPPP Preparation Date:

Insert Date

Estimated Project Dates:

Start of Construction: Insert Date Completion of Construction: Insert Date

WDID No.:_____

INSTRUCTIONS

- ❑ Include the numbers and names for each section of the SWPPP, from Section 100 to Section 600. List the first page number of each subsection.
- ❑ Include a Tab for each major section of the SWPPP and for each of the attachments.

REQUIRED TEXT:

Contents

Section 100 SWPPP Certifications and Approval 100-1
100.1 Initial SWPPP Certification by Contractor 100-1
100.2 Owner/Developer Approval and Certification of SWPPP 100-1
100.3 Annual Compliance Certification 100-2
Section 200 SWPPP Amendments 200-1
200.1 SWPPP Amendment Certification and Approval 200-1
200.2 Amendment Log 200-3
Section 300 Introduction and Project Description 300-1
300.1 Introduction and Project Description 300-1
300.2 Unique Site Features 300-1
300.3 Construction Site Estimates 300-1
300.4 Project Schedule/Water Pollution Control Schedule 300-1
300.5 Contact Information/List of Responsible Parties 300-1
Section 400 References 400-1
Section 500 Body of SWPPP 500-1
500.1 Objectives 500-1
500.2 Vicinity Map 500-2
500.3 Pollutant Source Identification and BMP Selection 500-2
500.3.1 Inventory of Materials and Activities that May Pollute Storm Water 500-2
500.3.2 Existing (pre-construction) Control Measures 500-3
500.3.3 Nature of Fill Material and Existing Data Describing the Soil 500-3
500.3.4 Erosion Control 500-4
500.3.5 Sediment Control 500-5
500.3.6 Tracking Control 500-6
500.3.7 Wind Erosion Control 500-6

500.3.8 Non-Storm Water Control....500-7
500.3.9 Waste Management and Materials Pollution Control....500-7
500.3.10 Cost Breakdown for Water Pollution Control....500-8
500.4 Water Pollution Control Drawings (WPCDs)....500-8
500.5 Construction BMP Maintenance, Inspection, and Repair....500-8
500.6 Post-Construction Storm Water Management....500-9
500.6.1 Post-Construction Control Practices....500-9
500.6.2 Operation/Maintenance after Project Completion....500-9
500.7 Training....500-10
500.8 List of Subcontractors....500-10
500.9 Other Plans/Permits....500-10
Section 600 Monitoring Program and Reports....600-1
600.1 Site Inspections....600-1
600.2 Non-Compliance Reporting....600-1
600.3 Record Keeping and Reports....600-2
600.4 Sampling and Analysis Plan for Sediment....600-2
600.4.1 Scope of Monitoring Activities....600-2
600.4.2 Monitoring Strategy....600-2
600.4.3 Monitoring Preparation....600-3
600.4.4 Sample Collection and Handling....600-5
600.4.5 Sample Analysis....600-8
600.4.6 Quality Assurance/Quality Control....600-10
600.4.7 Data Management and Reporting....600-10
600.4.8 Data Evaluation....600-10
600.4.9 Change of Conditions....600-11
600.5 Sampling and Analysis Plan for Non-Visible Pollutants....600-11
600.5.1 Scope of Monitoring Activities....600-11
600.5.2 Monitoring Strategy....600-12
600.5.3 Monitoring Preparation....600-14
600.5.4 Analytical Constituents....600-16
600.5.5 Sample Collection and Handling....600-16
600.5.6 Sample Analysis....600-19
600.5. 7 Quality Assurance/Quality Control....600-21
600.5.8 Data Management and Reporting....600-21
600.5.9 Data Evaluation....600-21
600.5.10 Change of Conditions....600-22

SWPPP Attachments

Attachment A ..... Vicinity Map
Attachment B ..... Water Pollution Control Drawings
Attachment C ..... BMP Consideration Checklist
Attachment D ..... Computation Sheet for Determining Runoff Coefficients
Attachment E ..... Computation Sheet for Determining Run-on Discharges
Attachment F ..... Notice of Intent (NOI)
Attachment G ..... Program for Maintenance, Inspection, and Repair of Construction Site BMPs
Attachment H ..... Storm Water Quality Construction Site Inspection Checklist
Attachment I ..... Trained Contractor Personnel Log
Attachment J ..... Subcontractor Notification Letter and Log
Attachment K ..... Notice of Non-Compliance
Attachment L ..... SWPPP and Monitoring Program Checklist
Attachment M ..... Annual Certification of Compliance Form
Attachment N ..... Other Plans/Permits
Attachment O ..... Water Pollution Control Cost Breakdown
Attachment P ..... Notice of Termination (NOT)
Attachment Q ..... BMPs Selected for the Project
Attachment R ..... Sampling Activity Log
Attachment S ..... Construction Material and Pollutant Testing Guidance Table – Non-Visible Pollutants
Attachment T ..... Discharge Reporting Log

Section 100
SWPPP Certifications and Approval

100.1 Initial SWPPP Certification by Contractor

INSTRUCTIONS:

- ❑ Include a Separator and Tab for Section 100 for ready reference.

- The SWPPP shall be signed and certified by the Contractor or authorized qualified designee, in conformance with Section C, Provision 9 of the General Construction Permit (CAS000002, Order No. 99-08-DWQ).

- ❑ Fill in the project name and the grading permit number, building permit number, tract number, CUP, SUP or APN at the top of the form.
- ❑ Certification shall be signed and dated by the person responsible for overall management of the site, such as a corporate officer or person assigned the responsibility by a corporate officer, according to corporate procedures.
- ❑ Fill in the name, title and telephone number of the person signing the certification.
- ❑ The SWPPP and Monitoring Program Checklist in Attachment L shall be completed and submitted.
- ❑ The Notice of Intent (NOI) is to be attached in Attachment F. The completed form must be provided by the Owner/Developer.

REQUIRED TEXT: To be completed by Contractor

Project Name:	**Start Here…Triple Click here to insert Project Name-then TAB to next field**
Project Number:	**Insert Grading Permit No., Building Permit No., Tract Number, CUP, SUP and/or APN -then TAB to next field.**

"I certify under a penalty of law that this document and all attachments were prepared under my direction or supervision in accordance with a system designed to ensure that qualified personnel properly gather and evaluate the information submitted. Based on my inquiry of the person or persons who manage the system or those persons directly responsible for gathering the information, to the best of my knowledge and belief, the information submitted is true, accurate, and complete. I am aware that there are significant penalties for submitting false information, including the possibility of fine and imprisonment for knowing violations."

Contractor's Signature	Date
Contractor's Name and Title	Telephone Number

100.2 Owner/Developer Approval and Certification of SWPPP

INSTRUCTIONS:

- The SWPPP shall be signed and certified by the Owner/Developer/Contractor in conformance with Section C, Item 9 of the General Construction Permit (CAS000002, Order No. 99-08-DWQ).
- This certification shall be signed by a responsible corporate officer, principal executive officer, general partner or proprietor, or by a duly authorized representative. A person is a duly authorized representative only if:
  1. The authorization is made in writing by a person described above and retained as part of the SWPPP.
  2. The authorization specifies either an individual or a position having responsibility for the overall operation of the construction activity, such as the position of manager, operator, superintendent, or position of equivalent responsibility or an individual or position having overall responsibility for environmental matters of the company or agency.
  3. If an authorization is no longer accurate because a different individual or position has responsibility for the overall operation of the facility, a new authorization must be reported to the Regional Board and attached to the SWPPP prior to submittal of any reports, certifications, or information signed by the authorized representative.
- In the case of Public Works projects, the [City] Engineer is the authorized representative of the agency for approving, signing, and certifying the SWPPP; in conformance with Section C, Item 9 of the General Construction Permit (CAS000002, Order No. 99-09-DWQ).

- ❑ Fill in the project name and the grading permit number, building permit number, tract number, CUP, SUP or APN at the top of the form.
- ❑ Certification shall be signed and dated by the Owner/Developer staff; specifically, the person responsible for preparation of the SWPPP and/or person responsible for overall management of the site, such as a corporate officer or person assigned the responsibility by a corporate officer, according to corporate procedures.
- ❑ Fill in the name(s), title(s) and telephone number(s) of the person(s) signing the certification.

REQUIRED TEXT:

Owner/Developer
Approval and Certification of the
Storm Water Pollution Prevention Plan

Project Name: **Start Here…Triple Click here to insert Project Name-then TAB to next field**

Project Number: **Insert Grading Permit No., Building Permit No., Tract Number, CUP, SUP and/or APN -then TAB to next field.**

"I certify under a penalty of law that this document and all attachments were prepared under my direction or supervision in accordance with a system designed to ensure that qualified personnel properly gather and evaluate the information submitted. Based on my inquiry of the person or persons who manage the system or those persons directly responsible for gathering the information, to the best of my knowledge and belief, the information submitted is true, accurate, and complete. I am aware that there are significant penalties for submitting false information, including the possibility of fine and imprisonment for knowing violations."

Owner/Developer Signature	Date
Owner/Developer Name	Telephone Number

100.3 Annual Compliance Certification

INSTRUCTIONS:

- Owner/Developer/Contractor's qualified assigned/authorized personnel listed by name and contact telephone number in the SWPPP shall certify annually that construction activities comply with the requirements of the Permit and the SWPPP. This Certification is based upon the site inspections required in Section 600.
- The Owner/Developer/Contractor is responsible for completing and submitting a Letter of Certification and Annual Fee to the RWQCB prior to July 1 of each year.
- A blank copy of the Annual Certification of Compliance shall be included in the SWPPP as Attachment M.
- Completed and signed Annual Compliance Certifications and [City] Engineer Approvals shall be included in this section of the SWPPP following the required text, below.
- Do not complete the Annual Certification during the initial SWPPP approval. Annual certifications are completed by July 1 each year. For those projects that start construction on or after July 1, an Annual Certification will not be required until the following July 1.

REQUIRED TEXT:

By July 1 of each year, the Contractor shall submit an Annual Certification of Compliance to the appropriate Regional Water Quality Control Board (RWQCB), stating compliance with the terms and conditions of the Permit and the SWPPP. The Annual Certification of Compliance Form is included in Attachment M. Completed Annual Certifications of Compliance and Approvals can be found in the following pages.

Section 200
SWPPP Amendments

200.1 SWPPP Amendment Certification and Approval

INSTRUCTIONS:

- ❑ Include a Separator and Tab for Section 200 for ready reference.

- When changes to the approved SWPPP are required, the Contractor shall prepare and certify an amendment. The Owner/Developer shall review and approve all amendments.
- The SWPPP shall be amended:
  - Whenever there is a change in construction or operations which may affect the discharge of pollutants to surface waters, groundwater(s), or a municipal separate storm sewer system (MS4);

    or
  - If any condition of the Permit is violated or the general objective of reducing or eliminating pollutants in storm water discharges has not been achieved. If the RWQCB determines that a Permit violation has occurred, the SWPPP shall be amended and implemented within 14-calendar days after notification by the RWQCB;

    and
  - Annually, prior to the defined rainy season.
- All SWPPP amendments shall be transmitted in letter format and shall include revised drawings, as appropriate.
- All amendments shall be recorded in the SWPPP Amendment Log that is located in Section 200.2 of the SWPPP.
- Amendments will be inserted into the Owner/Developer/Contractor's on-site SWPPP. Owner/Developer/Contractor Certifications for all amendments shall be inserted into this section.
- The following items shall be included in each amendment:
  - Discuss who requested the amendment.
  - Describe the location of proposed change.
  - Describe reason for change.

- Describe the original BMP proposed, if any.
- Describe the new BMP proposed.
- Describe any existing implemented BMP(s)

❑ This SWPPP certification and approval form shall be used as a cover sheet for each amendment.

❑ Fill-in the Project name and number.

❑ The Owner/Developer/Contractor shall sign and date the certification form.

❑ The [City] Engineer shall sign and date the certification approval form.

❑ Print the names and telephone numbers.

EXAMPLE:

The Regional Water Quality Board has requested the following Amendment:

The concrete washout is to be relocated away from the drainage inlet at Miller Ave. It is now located on the northeast section of the construction site, see revised map. This change will prevent concrete washout water from entering the drainage inlet.

REQUIRED TEXT:

This SWPPP shall be amended:

- Whenever there is a change in construction or operations which may affect the discharge of pollutants to surface waters, groundwater(s), or a municipal separate storm sewer system (MS4); or
- If any condition of the Permits is violated or the general objective of reducing or eliminating pollutants in storm water discharges has not been achieved. If the RWQCB determines that a Permit violation has occurred, the SWPPP shall be amended and implemented within 14-calendar days after notification by the RWQCB;
- Annually, prior to the defined rainy season; and
- When deemed necessary by the Owner/Developer/Contractor.

The following items will be included in each amendment:

- Who requested the amendment.

- The location of proposed change.
- The reason for change.
- The original BMP proposed, if any.
- The new BMP proposed.

The amendments for this SWPPP, along with the Owner/Developer/Contractor's Certification and the Owner/Developer/Contractor approval, can be found in the following pages. Amendments are listed in the Amendment Log in section 200.2

INSERT ADDITIONAL RESPONSIBILITIES AND/OR NAMES HERE OR DELETE THIS LINE (Use the "FORMAT OPTIONS" button to insert subtitles and/or paragraphs)

SWPPP Amendment No.

Project Name:	**Start Here…Triple Click here to insert Project Name-then TAB to next field**
Project Number:	**Insert Grading Permit No., Building Permit No., Tract Number, CUP, SUP and/or APN -then TAB to next field.**

Contractor Certification of the Storm Water Pollution Prevention Plan Amendment

"I certify under a penalty of law that this document and all attachments were prepared under my direction or supervision in accordance with a system designed to ensure that qualified personnel properly gather and evaluate the information submitted. Based on my inquiry of the person or persons who manage the system or those persons directly responsible for gathering the information, to the best of my knowledge and belief, the information submitted is true, accurate, and complete. I am aware that there are significant penalties for submitting false information, including the possibility of fine and imprisonment for knowing violations."

Contractor's Signature	Date
Contractor's Name and Title	Telephone Number

Owner/Developer Approval of the Storm Water Pollution Prevention Plan Amendment

"I certify under a penalty of law that this document and all attachments were prepared under my direction or supervision in accordance with a system designed to ensure that qualified personnel properly gather and evaluate the information submitted. Based on my inquiry of the person or persons who manage the system or those persons directly responsible for gathering the information, to the best of my knowledge and belief, the information submitted is true, accurate, and complete. I am aware that there are significant penalties for submitting false information, including the possibility of fine and imprisonment for knowing violations."

Owner/Developer Signature	Date
Owner/Developer Name and Title	Telephone Number

200.2 Amendment Log

INSTRUCTIONS:

- SWPPP amendment(s) prepared and approved as discussed in Section 200.1 shall be documented in the Amendment Log, which shall be kept in Section 200 of the SWPPP, immediately following the Certification and Approval forms.
- All amendments shall be dated, directly attached to the SWPPP, and listed in the Amendment Log.
  - ❑ Enter the project name and number(s) at the top of the form.
  - ❑ Enter the Amendment number, Date, Brief Description, and Name of Person Who Prepared the Amendment in the table.

EXAMPLE:

Amendment No.	Date	Brief Description of Amendment	Prepared By
001	Dec 10, 2000	Grading schedule changed to begin on Feb 10, 2001, and will include additional 2 acres. Amended plans attached to SWPPP.	John Doe, Superintendent

REQUIRED TEXT:

Project Name: **Start Here…Triple Click here to insert Project Name-then TAB to next field**

Project Number: **Insert Grading Permit No., Building Permit No., Tract Number, CUP, SUP and/or APN -then TAB to next field.**

Amendment No.	Date	Brief Description of Amendment	Prepared By

Amendment No.	Date	Brief Description of Amendment	Prepared By

Section 300
Introduction and Project Description

300.1 Introduction and Project Description

INSTRUCTIONS:

- ❑ Include a Separator and Tab for Section 300 for ready reference.
- ❑ Provide the project's legal description, (County, City and address). Describe proximity to receiving waters to which the project will discharge, including surface waters, drainage channels, and drainage systems (identify who owns the drainage system; i.e., municipality or agency.)

EXAMPLE:

The construction project is located in Orange County, in Any city. The project is a land development that will ultimately include 600 single-family homes, a planned senior community and commercial properties. The project will be constructed in four stages. The main project features include mass grading, construction of water, storm drain and sewer lines, underground telephone, electric and cable TV lines, roadways and buildings.

REQUIRED TEXT:

CLICK AND TYPE PROJECT DESCRIPTION HERE

300.2 Unique Site Features

INSTRUCTIONS:

- ❑ Provide a brief description of any unique site features (water bodies, wetlands, environmentally sensitive areas, endangered or protected species, etc.) and significant or high-risk construction activities that may impact storm water quality. Include any unique features or activities within or adjacent to water bodies (such as dredging, dewatering, re-use of aerially deposited lead material, large excavations, or work within a water body).

EXAMPLE:

Conejo Creek traverses the project in a southwesterly direction. Conejo Creek is located east of the project site adjacent to the project limits. Conejo Creek is a dry creek that only flows during storm events.

REQUIRED TEXT:

CLICK AND TYPE PROJECT FEATURES HERE

300.3 Construction Site Estimates

INSTRUCTIONS:

- Provide an estimate of the following site features (Refer also to Attachments D and E):
  - ❑ Construction site area (acres)
  - ❑ Runoff coefficient before and after construction
  - ❑ Percentage impervious area before and after construction
  - ❑ Anticipated storm water run-on to the construction site (Show calculations and include as Attachment E).

EXAMPLE:

The following are estimates of the construction site:

Construction site area:	530 Acres
Percentage impervious area before construction:	0 %
Runoff coefficient before construction (1):	0.43
Percentage impervious area after construction	40%
Runoff coefficient after construction (1)	0.60
Anticipated storm water flow on to the construction site (2)	35.1 cfs

(1) Calculations are shown in Attachment D
(2) Calculations are shown in Attachment E

REQUIRED TEXT:

The following are estimates of the construction site:

Construction site area	_____	acres
Percentage impervious area before construction	_____	%
Runoff coefficient before construction (1)	_____	
Percentage impervious area after construction	_____	%
Runoff coefficient after construction (1)	_____	
Anticipated storm water flow on to the construction site (2)	_____	cfs

(1) Calculations are shown in Attachment D
(2) Calculations are shown in Attachment E

300.4 Project Schedule/Water Pollution Control Schedule

INSTRUCTIONS:

- ❑ Provide a written and graphical project schedule. The schedule shall clearly show how the rainy season relates to soil-disturbing and re-stabilization activities. The schedule shall contain an adequate level of detail to show major activities sequenced with implementation of construction site BMPs, including:
  - ❑ Project start and finish dates
  - ❑ Rainy season dates
  - ❑ Annual certifications
  - ❑ Mobilization dates
  - ❑ Mass clearing and grubbing/roadside clearing dates
  - ❑ Major grading/excavation dates
  - ❑ Special dates named in other permits such as Fish and Game and Army Corps of Engineers Permits
  - ❑ Dates for submittal of SWPPP Amendments required by the contract documents
  - ❑ Annual submittal of rainy season implementation schedule if required by the Permittee

- ❑ Dates for implementation of pre-rainy season temporary soil stabilization and temporary sediment control BMPs, if required by the contract documents
- ❑ Rainy season implementation schedule
  - ❑ Deployment of temporary soil stabilization BMPs
  - ❑ Deployment of temporary sediment control BMPs
  - ❑ Deployment of wind erosion control BMPs
  - ❑ Deployment of tracking control BMPs
  - ❑ Deployment of non-storm water BMPs
  - ❑ Deployment of waste management and materials pollution control BMPs
- ❑ Non-rainy season implementation schedule
  - ❑ Deployment of temporary soil stabilization BMPs
  - ❑ Deployment of temporary sediment control BMPs
  - ❑ Deployment of wind erosion control BMPs
  - ❑ Deployment of tracking control BMPs
  - ❑ Deployment of non-storm water BMPs
  - ❑ Deployment of waste management and materials pollution control BMPs
- ❑ Paving, saw-cutting, and any other pavement related operations
- ❑ Major planned stockpiling operations
- ❑ Dates for other significant long-term operations or activities that may plan non-storm water discharges such as dewatering, grinding, etc.
- ❑ Final stabilization activities staged over time for each area of the project

- Note: Projects located in the Lake Tahoe, Truckee River, East Fork Carson River, or West Fork Carson River Hydrologic Units, and project above 1,200 meters (5,000 ft) in elevations in the portions of Mono County or Inyo County within the Lahontan RWQCB are not allowed to perform removal of vegetation nor disturbance of existing ground surface conditions between October 15 of each year and May 1 of the following year; except when there is an emergency situation that threatens the public health or welfare, or when the project is granted a variance by the RWQCB Executive Officer.

EXAMPLE: Written Schedule

Estimate Construction Start: 05/01/2000

Estimate Construction Finish: 04/15/2002

Mobilization of equipment and materials to begin on 05/01/2000

Store temporary soil stabilization and temporary sediment control products beginning on 05/01/2000.

Install stabilized construction entrance on 05/01/2000

Site preparation: Clearing and grubbing (Phase I) will occur from 05/25/2000-06/30/2000

Begin construction of residential units 5/30/2000-6/30/2001

Submit annual rainy season implementation schedule 9/25/00

Prepare soil stabilization and sediment control implementation plan prior to the rainy season, submit to the Owner/Developer by 09/25/2000

Start implementation of temporary soil stabilization and sediment control BMPs on 09/28/00 (before rainy season starts). Continue to implement and maintain temporary BMPs throughout rainy season.

Complete installation of temporary soil stabilization and sediment control BMPs on 10/05/2000

Rainy season begins 10/15/2000

Excavation to begin on 06/30/2000 and continue through 02/20/2001

Installation of utilities (power lines, phone lines, storm drain and sewer lines) 3/2001-9/2001

Grading work 07/15/2000 – 02/20/2001.

Clearing and grading for commercial property lots 7/30/2000 – 12/31/2000

Schedule soil stabilization subcontractors for application of temporary soil stabilization on disturbed areas and permanent erosion control on areas substantially complete: 09/01/2000

Rainy season ends 04/15/2001

Clearing and grubbing (Phase II) from 05/01/2001 through 07/30/2001

SWPPP Annual Certification due on 07/01/2001

Begin trenching, backfilling and compaction on 07/15/2001

Implement final erosion control of substantially completed areas 8/1/2001

Install temporary concrete washout 09/10/2001

Submit annual rainy season implementation schedule 09/25/2001

Start implementation of temporary soil stabilization and sediment control BMPs on 09/28/2001 (before rainy season starts). Continue to implement and maintain temporary BMPs throughout rainy season.

Complete installation of temporary soil stabilization and sediment control BMPs on 10/05/2001

Rainy season starts 10/15/2001

End residential units construction on or before 01/25/2002

Begin final paving/construction on 02/01/2002. Continue to apply soil stabilization and sediment controls as needed during construction

Remove concrete washout and restore area to original grade

Schedule subcontractors for application of permanent erosion control 03/01/2002

Start final stabilization, revegetation and landscape by 03/15/2002

Project complete 04/15/2002

REQUIRED TEXT:

CLICK AND TYPE EITHER NARRATIVE PROJECT SCHEDULE OR STATE THAT THE GRAPHIC SCHEDULE IS ON THE FOLLOWING PAGE. ADD PAGE BREAKS AS NEEDED TO MAKE SURE THAT THE PAGE NUMBERING IS CONSISTENT THROUGHOUT THE DOCUMENT.

300.5 Contact Information/List of Responsible Parties

INSTRUCTIONS:

- Owner/Developer/Contractor is required to show the Name, Address and Telephone number(s) of the person(s) responsible for SWPPP management/implementation, water pollution control and Permit compliance during construction. This person shall be called the Storm Water Pollution Prevention Manager (SWPPM).
- Duties of the SWPPM include but are not limited to:
  - Ensuring full compliance with the SWPPP and the Permit
  - Implementing all elements of the SWPPP and contract documents, including but not limited to:
    - Implementation of prompt and effective erosion and sediment control measures
    - Implementing all non-storm water management, and materials and waste management activities such as: monitoring discharges (dewatering, diversion devices); general site clean-up; vehicle and equipment cleaning, fueling and maintenance; spill control; ensuring that no materials other than storm water are

discharged in quantities which will have an adverse effect on receiving waters or storm drain systems; etc.

- Pre-storm inspections
- Storm event inspections
- Post-storm inspections
- Routine inspections as specified in the project's specifications or described in the SWPPP
- Updates/Amendments to the SWPPP, as needed
- Preparing annual compliance certification
- Ensuring elimination of all unauthorized discharges
- The SWPPM shall be assigned authority by the Owner/Developer/Contractor to mobilize crews in order to make immediate repairs to the control measures
- Coordinate with the Owner/Developer/Contractor to assure all of the necessary corrections/repairs are made immediately, and that the project complies with the SWPPP, the Permit and approved plans at all times.
- Submitting Notices of Discharge and reports of Illicit Connections or Illegal Discharges

■ If anyone else other than the SWPPM is responsible for any of these duties, enter Name, address, telephone number(s) of the person(s) and the duty or duties for which they are responsible and edit the template below as needed.

❑ Name and Telephone Number(s) of the Contractor's SWPPM. The Contractor's SWPPM shall have primary responsibility and significant authority for the implementation, maintenance, inspection and amendments to the approved SWPPP.

REQUIRED TEXT:

The Storm Water Pollution Prevention Manager (SWPPM) assigned to this project is:

Insert SWPPM's Name-then **TAB.**

Insert Telephone Number(s)-then **TAB.**

Insert Owner/Developer/Contractor's Company Name-then **TAB.**

Insert Address 1 then press **ENTER to insert Address 2 or TAB to next field.**

Insert City, State, ZIP-then **TAB.**

The SWPPM shall have primary responsibility and significant authority for the implementation, maintenance, inspection and amendments to the approved SWPPP. The SWPPM will be available at all times throughout the duration of the project. Duties of the Owner/Developer/Contractor's SWPPM include but are not limited to:

- Ensuring full compliance with the SWPPP and the Permit
- Implementing all elements of the SWPPP, including but not limited to:
  - Implementation of prompt and effective erosion and sediment control measures
  - Implementing all non-storm water management, and materials and waste management activities such as: monitoring discharges (dewatering, diversion devices); general site clean-up; vehicle and equipment cleaning, fueling and maintenance; spill control; ensuring that no materials other than storm water are discharged in quantities which will have an adverse effect on receiving waters or storm drain systems; etc.
- Pre-storm inspections
- Storm event inspections
- Post-storm inspections
- Routine inspections as specified in the project's specifications or described in the SWPPP
- Updates/Amendments to the SWPPP, as needed
- Preparing annual compliance certification
- Ensuring elimination of all unauthorized discharges
- The SWPPM shall be assigned authority by the Owner/Developer/Contractor to mobilize crews in order to make immediate repairs to the control measures
- Coordinate with the Owner/Developer/Contractor to assure all of the necessary corrections/repairs are made immediately, and that the project complies with the SWPPP, the Permit and approved plans at all times
- Submitting Notices of Discharge and reports of Illicit Connections or Illegal Discharges

INSERT ADDITIONAL RESPONSIBILITIES AND/OR NAMES HERE OR DELETE THIS LINE (Use the "FORMAT OPTIONS" button to insert subtitles and/or paragraphs)

Section 400
References

INSTRUCTIONS:

- ❑ Include a Separator and Tab for Section 400 for ready reference.
- ❑ Identify and prepare a list of the documents referenced in the SWPPP. Project Plans & Specifications, reports, design, and storm water management related documents used to prepare the SWPPP must also be included in the references.

- Documents that shall be referenced are:
  - ❑ All permits that apply to the project (Federal, state and local), such as Fish and Game, U.S. Army Corps of Engineers, DTSC Aerially Deposited Lead Reuse Variance, local RWQCB Permits or specific requirements, etc.

- Referenced materials may also include:
  - ❑ On-site project information such as the project plans and specifications, Geotechnical Report, Hydrology/Hydraulic Report, other reports provided by the Owner/Developer/Contractor, regulatory guidance from federal or state agencies, and published technical specifications

- The reference for each document shall include:
  - ❑ Complete name of the referenced document
  - ❑ Number of the document (if applicable)
  - ❑ Author
  - ❑ Date Published
  - ❑ Document date/revision that applies
- Referenced documents shall be kept on-site and be readily available for review.

EXAMPLE:

The following documents are made a part of this SWPPP by reference:

- Project plans and specifications No. xx-xxxx
- State Water Resources Control Board (SWRCB) Order No. 99-08-DWQ, National Pollutant Discharge Elimination System (NPDES) General Permit No. CAS000002, Waste Discharge Requirements (WDRs) for Discharges of Storm Water Runoff Associated with Construction Activity. August 19, 1999, ("Permit").
- State Water Resources Control Board (SWRCB) Resolution No. 2001- 046, Modification of Water Quality Order 99-08-DWQ State Water Resources Control Board (SWRCB) National Pollutant Discharge Elimination System (NPDES) General Permit for Storm Water Discharges Associated With Construction Activity (General Permit), adopted by the SWRCB on April 26, 2001.
- Modification of Water Quality Order 99-08-DWQ State Water Resources Control Board (SWRCB) National Pollutant Discharge Elimination System (NPDES) General Permit for Storm Water Discharges Associated With Construction Activity (General Permit) to Include Small Construction Activity (One to Five Acres), adopted by the SWRCB on December 2, 2002.
- California Regional Water Quality Control Board, Los Angeles Region, Waiver of Clean Water Act Section 401 Water Quality Certification, dated xx/xx/xx.
- US Army Corps of Engineers, Nationwide Permit 26-authorization letter, dated xx/xx/xx.
- California Stormwater BMP Handbook – Construction, January 2003
- Storm Water Management for Construction Activities – Developing Pollution Prevention Plans and Best Management Practices, USEPA 832-R-92-005, October 1992.

REQUIRED TEXT:

The following documents are made a part of this SWPPP by reference:

- Project plans and specifications No. INSERT NUMBER, dated INSERT DATE, prepared by ENTITY PREPARING THE PLANS, SPECIFICATIONS AND ESTIMATE.
- State Water Resources Control Board (SWRCB) Order No. 99-08-DWQ, National Pollutant Discharge Elimination System (NPDES) General Permit No. CAS000002, Waste Discharge Requirements (WDRs) for Discharges of Storm Water Runoff Associated with Construction Activity, August 1999.
- State Water Resources Control Board Resolution No. 2001- 046, Modification of Water Quality Order 99-08-DWQ State Water Resources Control Board (SWRCB)

National Pollutant Discharge Elimination System (NPDES) General Permit for Storm Water Discharges Associated with Construction Activity (General Permit), adopted by the SWRCB on April 26, 2001.

- Modification of Water Quality Order 99-08-DWQ State Water Resources Control Board (SWRCB) National Pollutant Discharge Elimination System (NPDES) General Permit for Storm Water Discharges Associated With Construction Activity (General Permit) to Include Small Construction Activity (One to Five Acres), adopted by the SWRCB on December 2, 2002.
- California Stormwater BMP Handbook – Construction, January 2003
- CLICK AND TYPE OTHER REFERENCES HERE
-

Section 500
Body of SWPPP

500.1 Objectives

INSTRUCTIONS:

- ❑ Include a Separator and Tab for Section 500 for ready reference.
- The six primary SWPPP objectives are described in the General Permit and are shown below in the "required text" section. Pollutant source identification and BMP selections shall be developed in the body of the SWPPP to support the six SWPPP objectives.

REQUIRED TEXT:

This Storm Water Pollution Prevention Plan (SWPPP) has six main objectives:

- Identify all pollutant sources, including sources of sediment that may affect the quality of storm water discharges associated with construction activity (storm water discharges) from the construction site, and
- Identify non-storm water discharges, and
- Identify, construct, implement in accordance with a time schedule, and maintain Best Management Practices (BMPs) to reduce or eliminate pollutants in storm water discharges and authorized non-storm water discharges from the construction site during construction, and
- Develop a maintenance schedule for BMPs installed during construction designed to reduce or eliminate pollutants after construction is completed (post-construction BMPs).
- Identify a sampling and analysis strategy and sampling schedule for discharges from construction activity which discharge directly into water bodies listed on Attachment 3 of the Permit (Clean Water Act Section 303(d) [303(d)] Water Bodies listed for Sedimentation).

- For all construction activity, identify a sampling and analysis strategy and sampling schedule for discharges that have been discovered through visual monitoring to be potentially contaminated by pollutants not visually detectable in the runoff.

This SWPPP conforms with the required elements of the General Permit No. CAS000002 issued by the State of California, State Water Resources Control Board (SWRCB). This SWPPP will be modified and amended to reflect any amendments to the Permit, or any changes in construction or operations that may affect the discharge of pollutants from the construction site to surface waters, groundwaters, or the municipal separate storm sewer system (MS4). The SWPPP will also be amended if it is in violation of any condition of the Permit or has not achieved the general objective of reducing pollutants in storm water discharges. The SWPPP shall be readily available on-site for the duration of the project.

500.2 Vicinity Map

INSTRUCTIONS:

- The General Permit requires that both a vicinity and site map be included in the SWPPP.
  - ❑ The Vicinity Map shall be a 8-1/2" x 11" color copy of a USGS map or equal and shall extend approximately 400 meters (one-quarter mile) beyond the property boundaries of the construction site (an 11" x 17" may be used if needed). Insert the vicinity map as Attachment A and place a reference in Section 500.2. To meet the site map requirement, insert a reduced copy (8-1/2" x 11" or 11" x 17") of the project's Title Sheet in Attachment A and make reference to it in Section 500.2.
  - ❑ Provide a brief narrative description of the vicinity to support the map in Attachment A. Describe important features, drainage areas, or receiving waters that could not be shown on the map.

- The vicinity map shall show:
  - ❑ Outline of the site's perimeter;
  - ❑ Easily identifiable major roadways;
  - ❑ Geographic features or landmarks;
  - ❑ Water bodies within or adjacent to the construction limits;
  - ❑ Construction site perimeter;
  - ❑ Known wells;
  - ❑ Outline of the offsite drainage area(s) that discharge into the construction site;

- ❑ Identification of anticipated discharge location(s) where the construction site's storm water discharges to a municipal storm sewer system or other water body;
- ❑ Other geographic features surrounding the site; and
- ❑ General topography.

REQUIRED TEXT

The construction project vicinity map showing the project location, surface water boundaries, geographic features, construction site perimeter, and general topography, is located in Attachment A. The project's Title Sheet provides more detail regarding the project location and is also included in Attachment A.

500.3 Pollutant Source Identification and BMP Selection

500.3.1 Inventory of Materials and Activities that May Pollute Storm Water

INSTRUCTIONS:

- ❑ List all construction materials that will have the potential to contribute to the discharge of pollutants to storm water.
- ❑ List all construction activities that have the potential to contribute sediment to storm water discharges.
- ❑ Insert as many bullets as necessary to complete the inventory.

EXAMPLE:

Control practices for each activity are identified in Sections 500.3.4 through 500.3.9

The following is a list of construction materials that will be used and activities that will be performed that will have the potential to contribute pollutants, other than sediment, to storm water runoff. Control practices for each activity are identified in the Sections 500.3.4 through 500.3.9:

- Vehicle fluids, including oil, grease, petroleum, and coolants
- Asphaltic emulsions associated with asphalt-concrete paving operations

- Cement materials associated with PCC concrete paving operations, drainage structures, median barriers, and bridge construction
- Base and subbase material
- Joint and curing compounds
- Concrete curing compounds
- Paints
- Solvents, thinners, acids
- Sandblasting materials
- Mortar mix
- Raw landscaping materials and wastes (topsoil, plant materials, herbicides, fertilizers, mulch, pesticides)
- BMP materials (sandbags, liquid copolymer)
- Treated lumber (materials and waste)
- PCC rubble
- Masonry block rubble
- General litter

Construction activities that have the potential to contribute sediment to storm water discharges include:

- Clear and grub operations
- Grading operations
- Soil import operations
- Utility excavation operations
- Sandblasting operations
- Landscaping operations

REQUIRED TEXT:

The following is a list of construction materials that will be used and activities that will be performed that will have the potential to contribute pollutants, other than sediment, to storm water runoff (control practices for each activity are identified in the Water Pollution Control Drawings (WPCDs) and/or in Sections 500.3.4 through 500.3.9:

- LIST

-
-
-
-
-
-

Construction activities that have the potential to contribute sediment to storm water discharges include:

- LIST
-
-
-
-
-
-
-

INSERT ADDITIONAL NARRATIVE TEXT HERE OR DELETE THIS LINE (Use the "FORMAT OPTIONS" button to insert subtitles and/or paragraphs)

Attachment C lists all Best Management Practices (BMPs) that have been selected for implementation in this project. Implementation and location of BMPs are shown on the WPCDs in Attachment B. Narrative descriptions of BMPs to be used during the project are listed by category in each of the following SWPPP sections. Attachment Q includes a list, and/or copies of the fact sheets of all the BMPs selected for this project.

500.3.2 Existing (pre-construction) Control Measures

INSTRUCTIONS:

- ❑ Identify the existing control measures in place prior to construction. Pre-construction control measures may include any measures used to reduce erosion, sediment or other pollutants in storm water discharges. Pre-construction control measures may include but not be limited to: Detention basins, infiltration basins, sediment basins, oil water separators, rock slope protection, existing erosion control, existing landscaping, lined ditches, energy dissipators etc.

EXAMPLE:

The following are existing (pre-construction) control measures encountered within the project site:

- Detention basin located at the southeast end of the project. This basin was designed as a combination flood control and permanent treatment control measure. It is anticipated that the basin will be used as a temporary sediment basin during construction, and will be restored to original condition prior to project completion.

REQUIRED TEXT:

The following are existing (pre-construction) control measures encountered within the project site:

- LIST
-
-
-
-
-

INSERT ADDITIONAL NARRATIVE TEXT HERE OR DELETE THIS LINE (Use the "FORMAT OPTIONS" button to insert subtitles and/or paragraphs)

500.3.3 Nature of Fill Material and Existing Data Describing the Soil

INSTRUCTIONS:

- ❑ Describe the conditions of the fill material and the soils at the construction site (i.e. types of soils, groundwater location and conditions, dewatering operations that may be necessary, etc.) and the source and conditions of the fill material at the construction site. A general description can usually be found in the geotechnical report or other environmental documents.
- ❑ Show and/or describe existing site features that, as a result of known past usage, may contribute pollutants to storm water, (e.g., toxic materials that are known to have been treated, stored, disposed, spilled, or leaked onto the construction site). Review the contract documents and associated environmental documents to determine the known site contaminants and list them in this section.

EXAMPLE:

Existing site features that, as a result of known past usage, may contribute pollutants to storm water, (e.g., toxic materials that are known to have been treated, stored, disposed, spilled, or leaked onto the construction site) include:

- Several old farms are within the project property. Extensive use of farming related chemicals may have left detectable amounts of toxic materials in the soil.
- This site includes aerially deposited lead located at the northeast corner of the site.

REQUIRED TEXT:

DESCRIBE CONDITIONS OF FILL MATERIALS AND EXISTING SOILS AT THE PROJECT SITE

Existing site features that, as a result of past usage, may contribute pollutants to storm water (e.g., toxic materials that are known to have been treated, stored, disposed, spilled, or leaked onto the construction site) include:

- LIST
-
-
-

INSERT ADDITIONAL NARRATIVE TEXT HERE OR DELETE THIS LINE (Use the "FORMAT OPTIONS" button to insert subtitles and/or paragraphs)

INSTRUCTIONS:

BMP SELECTION PROCESS

BMP selection is an iterative process that first identifies potential pollutant sources and then identifies the BMPs necessary to reduce or eliminate pollutant discharges from the construction site.

- ❑ Identify all BMPs selected for implementation (indicated in Attachment C, and any other BMPs required by the contract documents).
- ❑ Select BMPs to eliminate or reduce the pollutants identified in the inventory list (Section 500.3.1). See Section 3 of the *California Stormwater BMP Handbook – Construction*, for instructions for selecting and implementing construction site BMPs and fact sheets for construction site BMPs. Refer to the BMP Consideration Checklist in Attachment C to select BMPs in each of the following sections:

  500.3.4 Erosion Control (Soil Stabilization)

  500.3.5 Sediment Control

  500.3.6 Tracking Control

  500.3.7 Wind Erosion Control

  500.3.8 Non-Storm Water Control

  500.3.9 Waste Management and Materials Pollution Control

- ❑ Show the selected BMPs on the WPCDs. Use the instructions in Section 500.4 and the SWPPP and Monitoring Program Checklist (Attachment L) to confirm that all WPCD requirements are included. Provide a narrative description of the BMPs selected in the appropriate section.

500.3.4 Erosion Control

INSTRUCTIONS:

- The General Permit requires that, at a minimum, the Owner/Developer/Contractor implements an effective combination of erosion control (soil stabilization) and sediment controls on all disturbed areas during the rainy season.

  - ❑ Select temporary erosion control BMPs to be used and complete the Erosion Control section of the BMP Consideration Checklist in Attachment C. See Section 3 of the *California Stormwater BMP Handbook – Construction*, for instructions for selecting and implementing construction site BMPs and working details for construction site BMPs.

  - ❑ Provide introductory paragraphs that define erosion control and give a general approach on how temporary erosion control BMPs will be implemented on the project.

  - ❑ List all the temporary erosion control BMPs to be used in the project.

  - ❑ Show selected temporary erosion control BMPs on the WPCDs. Provide a narrative description of temporary erosion control BMPs that cannot be adequately identified on the WPCDs.

  - ❑ Discuss the on-site availability of temporary erosion control materials (materials kept for temporary erosion control BMPs) and proposed mobilization and implementation of temporary erosion control BMPs in the event of a predicted storm. (Explain how and when BMPs will be implemented when rain is forecasted). Sufficient material(s) needed to install temporary soil stabilization BMPs necessary to completely protect the exposed portions (disturbed soil area) of the site from erosion and to prevent sediment discharges must be stored on site. Areas that have already been protected from erosion using temporary or permanent physical stabilization or established vegetation stabilization BMPs are not considered to be "exposed disturbed soil areas" for purposes of this requirement.

EXAMPLE:

Erosion Control, also referred to as soil stabilization, is a source control measure that is designed to prevent soil particles from detaching and becoming suspended in the storm water runoff. Erosion control BMPs protect the soil surface by covering and/or binding the soil particles. This project will incorporate erosion control measures required by the contract documents, and other measures selected by the Contractor. This construction project will implement the following practices to assure effective temporary and final erosion control during construction:

1) Preserve existing vegetation where required and when feasible.

2) Apply temporary erosion control to remaining active and non-active areas as required by the California Stormwater BMP Handbook – Construction, and the contract documents. Reapply as necessary to maintain effectiveness.
3) Implement temporary erosion control measures at regular intervals throughout the defined rainy season to achieve and maintain the contract's disturbed soil area requirements. When the project's specifications require it, temporary erosion control BMPs will be implemented 20 days prior to the defined rainy season.
4) Stabilize non-active areas as soon as feasible after the cessation of construction activities.
5) Control erosion in concentrated flow paths by applying erosion control blankets,check dams, erosion control seeding, and lining swales as required in the contract documents.
6) Apply seed to areas deemed substantially complete by the [City] Engineer during the defined rainy season.
7) At completion of construction, apply permanent erosion control to all remaining disturbed soil areas.

Sufficient erosion control materials will be maintained on-site to allow implementation in conformance with Permit requirements and described in this SWPPP. This includes implementation requirements for active areas and non-active areas that require deployment before the onset of rain.

Implementation and locations of erosion control BMPs are shown on the Water Pollution Control Drawings (WPCDs) in Attachment B and/or described in this section. The BMP Consideration Checklist in Attachment C indicates the BMPs that will be implemented to control erosion on the construction site; these are:

- EC-2, Preservation of Existing Vegetation
- EC-6, Straw Mulch
- EC-7, Geotextiles and Mats
- EC-9, Earth Dikes and Drainage Swales

Implementation of Erosion Control BMPs

- BMPs will be deployed in a sequence to follow the progress of grading and construction. As the locations of soil disturbance change, erosion and sedimentation controls will be adjusted accordingly to control storm water runoff at the downgrade perimeter and drain inlets. BMPs will be mobilized as follows:

Year-round:

- The Storm Water Pollution Prevention Manager (SWPPM) will monitor weather using National Weather Service reports to track conditions and alert crews to the onset of rainfall events.

- Disturbed soil areas will be stabilized with temporary erosion control or with permanent erosion control as soon as possible after grading or construction is complete.

During the rainy season:

- Disturbed areas will be stabilized with temporary or permanent erosion control before rain events.
- Disturbed areas that are substantially complete will be stabilized with permanent erosion control (soil stabilization) and vegetation (if within seeding window for seed establishment).
- Prior to forecast storm events, temporary erosion control BMPs will be deployed and inspected.

During the non-rainy season:

- The project schedule will sequence construction activities with the installation of both erosion control and sediment control measures. The construction schedule will be arranged as much as practicable to leave existing vegetation undisturbed until immediately prior to grading.

Straw Mulch

- Straw mulch will be primarily used throughout the disturbed areas adjacent to excavations and on shallow slopes surrounding the site. See the WPCDs in Attachment B of this SWPPP for locations where straw mulch will be used.

Geotextiles, Plastic Covers and Erosion Control Blankets/Mats

- Geotextile blankets will be used to provide temporary and long-term stabilization for the flow line of the vegetated swale on the western boundary of the project.
- Polyethylene covers will be used to cover exposed soil and sand stockpiled material areas. Covers will be placed over stockpiles prior to forecast storm events, and anchored to prevent damage by wind.

REQUIRED TEXT:

Erosion control, also referred to as soil stabilization, consists of source control measures that are designed to prevent soil particles from detaching and becoming transported in storm water runoff. Erosion control BMPs protect the soil surface by covering and/or binding soil particles. This project will incorporate erosion control measures required by the contract documents, and other measures selected by the Contractor. This project will implement the following practices for effective temporary and final erosion control during construction:

1) Preserve existing vegetation where required and when feasible.

2) Apply temporary erosion control to remaining active and non-active areas as required by the CCaliforni Stormwater BMPs Handbook – Construction, and the contract documents. Reapply as necessary to maintain effectiveness.

3) Implement temporary erosion control measures at regular intervals throughout the defined rainy season to achieve and maintain the contract's disturbed soil area requirements. Implement erosion control prior to the defined rainy season.

4) Stabilize non-active areas as soon as feasible after the cessation of construction activities.

5) Control erosion in concentrated flow paths by applying erosion control blankets, erosion control seeding, and lining swales as required in the contract documents.

6) Apply seed to areas deemed substantially complete by the Owner during the defined rainy season.

7) At completion of construction, apply permanent erosion control to all remaining disturbed soil areas.

Sufficient erosion control materials will be maintained on-site to allow implementation in conformance with Permit requirements and described in this SWPPP. This includes implementation requirements for active areas and non-active areas that require deployment before the onset of rain.

Implementation and locations of temporary erosion control BMPs are shown on the Water Pollution Control Drawings (WPCDs) in Attachment B and/or described in this section. The BMP Consideration Checklist in Attachment C indicates the BMPs that will be implemented to control erosion on the construction site; these are:

- EC-1, Scheduling
- EC-2, Preservation of Existing Vegetation
-
-
-
-

INSERT ADDITIONAL NARRATIVE TEXT OF SOIL STABILIZATION HERE OR DELETE THIS LINE (Use the "FORMAT OPTIONS" button to insert subtitles and/or paragraphs)

500.3.5 Sediment Control

INSTRUCTIONS:

- ❑ Select sediment control BMPs to be used and complete the Sediment Control BMPs section of the BMP Consideration Checklist in Attachment C. See Section 3 of the *California Stormwater BMP Handbook – Construction*, for instructions for selecting and implementing construction site BMPs and working details for construction site BMPs.
- ❑ Provide introductory paragraphs that define what are sediment controls and give a general approach on how sediment control BMPs will be implemented at the draining perimeter of disturbed soil areas, at the toe of slopes, at inlets and outfall areas at all times.
- ❑ List all the temporary sediment control BMPs to be used in the project.
- ❑ Show selected temporary sediment control BMPs on the WPCDs. Provide a narrative description of temporary sediment control BMPs that cannot be adequately identified on the WPCDs.
- ❑ Show BMPs used to divert off-site drainage around and/or through the construction project.
- ❑ Discuss the on-site availability of temporary sediment control materials (materials kept for temporary sediment control BMPs) and proposed mobilization and implementation of temporary sediment control BMPs in the event of a predicted storm.

EXAMPLE:

Sediment controls are structural measures that are intended to complement and enhance the erosion control measures and reduce sediment discharges from construction areas. Sediment controls are designed to intercept and filter out soil particles that have been detached and transported by the force of water. This project will incorporate sediment control measures required by the contract documents, and other measures selected by the Owner/Developer/Contractor.

Sufficient quantities of temporary sediment control materials will be maintained on-site throughout the duration of the project, to allow implementation of temporary sediment controls in the event of predicted rain, and for rapid response to failures or emergencies, in conformance with other Permit requirements and as described in this SWPPP. This includes implementation requirements for active areas and non-active areas before the onset of rain.

Implementation and locations of temporary sediment control BMPs are shown on the Water Pollution Control Drawings (WPCDs) in Attachment B. The BMP Consideration Checklist in Attachment C indicates all the BMPs that will be implemented to control sediment on the construction site; these are:

- SE-1, Silt fence
- SE-4, Check dams
- SE-5, Fiber rolls
- SE-7, Street Sweeping and Vacuuming
- SE-8, Sandbag barrier
- SE-10, Storm Drain Inlet Protection

Implementation of Temporary Sediment Controls

- Temporary sediment control BMPs will be deployed according to the schedule shown in SWPPP Section 300.4.
- During the rainy season, temporary sediment controls will be implemented at the draining perimeter of disturbed soil areas, at the toe of slopes, at storm drain inlets and at outfall areas at all times.
- During the non-rainy season, temporary sediment controls will be implemented at the draining perimeter of disturbed soil areas and at storm drain downstream from disturbed areas before rain events.
- As shown on the WPCDs, silt fences will be deployed along the toe of exterior slopes to filter storm water runoff.
- Storm drain inlet protection will be used at all operational internal inlets to the storm drain system during the rainy season as shown on the WPCDs.
- During the non-rainy season, in the event of a predicted storm, the following temporary sediment control materials will be maintained on-site: silt fence materials, sandbags for linear barriers, fiber rolls

REQUIRED TEXT:

Sediment controls are structural measures that are intended to complement and enhance the selected erosion control measures and reduce sediment discharges from active construction areas. Sediment controls are designed to intercept and settle out soil particles that have been detached and transported by the force of water. This project will

incorporate sediment control measures required by the contract documents, and other measures selected by the Owner/Developer/Contractor.

Sufficient quantities of temporary sediment control materials will be maintained on-site throughout the duration of the project, to allow implementation of temporary sediment controls in the event of predicted rain, and for rapid response to failures or emergencies, in conformance with other Permit requirements and as described in this SWPPP. This includes implementation requirements for active areas and non-active areas before the onset of rain.

Implementation and locations of temporary sediment control BMPs are shown on the Water Pollution Control Drawings (WPCDs) in Attachment B. The BMP Consideration Checklist in Attachment C indicates all the BMPs that will be implemented to control sediment on the construction site; these are:

-
-
-
-
-
-
-

INSERT ADDITIONAL NARRATIVE TEXT OF SEDIMENT CONTROLS HERE OR DELETE THIS LINE (Use the "FORMAT OPTIONS" button to insert subtitles and/or paragraphs)

500.3.6 Tracking Control

INSTRUCTIONS:

- Tracking controls shall be considered and implemented year round and throughout the duration of the project, at all access (ingress/egress) points to the project site where vehicles and/or equipment may track sediment from the construction site onto public or private roadways.

- ❑ Select BMPs and provide a narrative description of tracking control BMPs that will be used to reduce sediment tracking onto public or private roads.
- ❑ Show on the WPCDs the location of all ingress/egress points to the project site where sediment tracking is likely.
- ❑ Describe measures to prevent sediment tracking in this section.
- ❑ Discuss road-cleaning BMPs.

EXAMPLE:

The following BMPs have been selected to reduce sediment tracking from the construction site onto private or public roads:

- SE-7, Street Sweeping and Vacuuming
- TC-1, Stabilized Construction Entrance/Exit
- TC-2, Stabilized Construction Roadway
- TC-3, Entrance/Outlet Tire Wash

BMPs to Reduce Sediment Tracking

Stabilized Construction Entrance/Exit

- A stabilized construction entrance/exit will be constructed and maintained at construction site entrances and exits, equipment yard, PCC batch plants and crushing plants, water filling area for water trucks, and project office location, as shown on the site map.

- The site entrance/exit will be stabilized to reduce tracking of sediment as a result of construction traffic. The entrance will be designated and graded to prevent runoff from leaving the site. Stabilization material will be 3 to 6-inch aggregate. The entrance will be flared where it meets the existing road to provide an adequate turning radius. During dirt-hauling activities that extend over a one-week time period, a site entrance/exit will be installed to reduce tracking of sediment.

Stabilized Construction Roadway

- The construction roadway through the site will also be designated and stabilized to prevent erosion and to control tracking of mud and soil material onto adjacent roads. The roadway will be clearly marked for limited speed to control dust. Refer to the WPCDs for entrance/exit and construction roadway locations. Stabilization material will be 3 to 6-inch aggregate. A regular

maintenance program will be conducted to replace sediment-clogged stabilization material with new stabilization material.

Entrance/Outlet Tire Wash

- An entrance/outlet tire wash station will be used to ensure that sediment tracking to public streets is minimized.

Road Cleaning BMPs – Street Sweeping and Vacuuming

Road sweeping and vacuuming will occur during soil hauling and as necessary to keep street surfaces clear of soil and debris. Washing of sediment tracked onto streets into storm drains will not occur.

REQUIRED TEXT:

The following BMPs have been selected to reduce sediment tracking from the construction site onto private or public roads:

- SE-7, Street Sweeping and Vacuuming
-
-

INSERT ADDITIONAL NARRATIVE TEXT OF TRACKING CONTROL PRACTICES HERE OR DELETE THIS LINE (Use the "FORMAT OPTIONS" button to insert subtitles and/or paragraphs)

500.3.7 Wind Erosion Control

INSTRUCTIONS:

- Wind erosion control BMPs shall be considered and implemented year-round and throughout the duration of the project on all disturbed soils on the project site that are subject to wind erosion, and when significant wind and dry conditions are anticipated during project construction. The objective of wind controls is to prevent the transport of soil from soil-disturbed areas of the project site, offsite by wind.

  - ❑ Select BMPs and provide a narrative description of BMPs that will be used to control dust during construction operations, including stockpile operations.

EXAMPLE:

The following BMPs have been selected to control dust from the construction site:

- WE-1, Wind Erosion Control

Dust Control

- Potable water will be applied to disturbed soil areas of the project site to control dust and maintain optimum moisture levels for compaction. The water will be applied using water trucks. As shown on the project schedule, project soils will be disturbed and exposed from approximately May 1 through December 15. Water applications will be concentrated during the late summer and early fall months and especially during the embankment construction operations scheduled for July. The total water to be applied is expected to be between 110,000 and 180,000 ft^3.

- BMP WE-1, Wind Erosion Control, and BMP NS-1, Water Conservation Practices, will be implemented to provide dust control and prevent discharges from dust control activities and water supply equipment. Water application rates will be minimized as necessary to prevent runoff and ponding and water equipment leaks will be repaired immediately.

- During windy conditions (forecast or actual wind conditions of approximately 25 mph or greater), dust control will be applied to disturbed areas, including haul roads, to adequately control wind erosion.

- BMP WM-3, Stockpile Management, using silt fences and plastic covers will be implemented to prevent wind dispersal of sediment from stockpiles.

REQUIRED TEXT:

The following BMPs have been selected to control dust from the construction site:

- WE-1, Wind Erosion Control
-
-

INSERT ADDITIONAL NARRATIVE TEXT OF WIND EROSION CONTROL PRACTICES HERE OR DELETE THIS LINE (Use the "FORMAT OPTIONS" button to insert subtitles and/or paragraphs)

500.3.8 Non-Storm Water Control

INSTRUCTIONS:

- Non-storm water discharges consist of all discharges from a municipal storm water conveyance, which do not originate from precipitation events (i.e., all discharges from a conveyance system other than storm water).
- ***PROHIBITED (ILLICIT) DISCHARGES***. Non-storm water discharges into storm drainage systems or waterways, which are not authorized under the Permit or authorized under a separate NPDES permit, are prohibited. Examples of prohibited discharges common to construction activities include:
  - Vehicle and equipment cleaning, fueling and maintenance operations
  - Vehicle and equipment wash water, including concrete washout water
  - Slurries from concrete cutting and coring operations, PCC grinding or AC grinding operations
  - Slurries from concrete or mortar mixing operations
  - Slurries from drilling or boring operations
  - Blast residue from high-pressure washing of structures or surfaces
  - Wash water from cleaning painting equipment
  - Runoff from dust control applications of water or dust palliatives
  - Sanitary and septic wastes
  - Chemical leaks and/or spills of any kind including but not limited to petroleum, paints, cure compounds, etc.
- Discharges of construction materials and wastes, such as fuel or paint, resulting from dumping, spills, or direct contact with rainwater or storm water runoff are also prohibited and shall be addressed in Section 500.3.9, Waste Management and Materials Pollution Control.
- Some specific non-storm water discharges may be allowed provided they are not relied upon to clean up failed or inadequate construction or post-construction BMPs designed to keep materials onsite. However, they must be identified as not being sources of pollutants to receiving waters and appropriate BMPs may be required to de developed and implemented to minimize adverse impacts from these sources/discharges. The RWQCB may require a separate NPDES permit or specific monitoring and reporting requirements for some non-storm water discharges. All possible non-storm water discharges shall be listed, along with narrative description of BMPs designed to control potential pollutants in such discharges. Examples of non-storm water discharges that may be allowed include:

- Flows from riparian habitats or wetlands
- Diverted stream flows
- Springs, rising groundwater
- Landscape irrigation runoff for purpose of establishing erosion control
- De-chlorinated water line flushing
- Hydrant flushing
- Foundation and footing drains
- Uncontaminated groundwater infiltration

- Other discharges such as pumped groundwater, irrigation water and water line and hydrant flushing are not prohibited if they are identified as not being sources of pollutants to receiving waters or if appropriate control measures (BMPs) to minimize the adverse impacts of such sources are developed and implemented. Some RWQCBs may require a separate NPDES permit or specific monitoring and reporting requirements for the conditionally exempt discharges. Check with the local jurisdiction on what discharges may be conditionally exempt.

- Use the following process to identify, quantify, and select BMPs for non-storm water discharges. List each potential non-storm water discharge and provide the information addressed by each step. Complete the BMP Consideration Checklist in Attachment C to show selected BMPs.

  - ❑ Identify all potential non-storm water discharges within the project. Examine all project activities and determine what discharges will be generated or may be required in order to complete each activity, including mobile-type operations. Discuss how mobile operations, such as maintenance and fueling for large or stationary equipment, will be addressed. Examples of common construction activities that may result in non-storm water discharges on a project are:

    - Vehicle and equipment cleaning, fueling and maintenance
    - Surface water diversions,
    - Dewatering operations
    - Saw-cutting
    - Drilling
    - Boring
    - AC and PCC grinding
    - AC and PCC recycling
    - Concrete mixing
    - Crushing

- Bridge cleaning
- Blasting
- Painting
- Hydro-demolition
- Mortar mixing
- Air-blown mortar, etc.

❑ Describe each planned non-storm water discharge from the project into the storm drain system or waterway, including flow/quantity and expected pollutants. If a flow or quantity cannot be determined, then fully describe the nature and extent of the activity such that the quantity can be inferred. One-time discharges shall be monitored by the person responsible for SWPPP implementation during the time that such discharges are occurring.

❑ Describe each non-storm water source or activity that may generate a discharge; containment facilities and appurtenances that would be employed; and flow paths of discharge to downstream inlets, drainage facilities, and receiving waters. Where possible, depict BMP locations on the WPCDs.

❑ Indicate the time period and frequency of each activity that generates or may generate a discharge.

❑ Describe mandatory non-storm water control BMPs and practices required by the local jurisdiction, the RWQCB (such as WDR requirements for projects that reuse Aerially Deposited Lead soils), other permits, or other federal, state, or local agencies. Provide details and schedules as appropriate. Include maintenance, inspection, testing, and reporting requirements. Provide permit information for discharges covered by a separate NPDES permit.

❑ Describe Owner/Developer/Contractor-selected non-storm water control BMPs and practices to minimize, contain, and dispose prohibited discharges or to minimize adverse impacts of authorized discharges from the project into the storm drain system or waterway. BMPs within both the Non-Storm Water Management and the Materials Handling and Waste Management categories may be applicable to non-storm water discharges. Include maintenance, inspection, testing, and reporting procedures, if applicable. Also include sediment controls for landscape irrigation prior to establishment of vegetation.

❑ Indicate how illicit connections and illegal discharges will be handled.

- When an Owner/Developer/Contractor sells or leases individual lots or properties, there may be instances when the new Owner(s)/occupant(s) get involved in construction activities that may contribute to the discharge of pollutants into storm water. It is suggested that the Owner/Developer/Contractor develops a notification pamphlet or brochure that makes the

new Owner(s)/occupant(s) aware of the potential for unauthorized discharges and practices to limit, reduce or eliminate the risks of discharging pollutants into storm water.

EXAMPLE:

An inventory of construction activities and potential non-storm water discharges is provided in Section 5.3.1. The BMP Consideration Checklist in Attachment C and the following list indicates the BMPs that have been selected to control non-storm water pollution on the construction site. Implementation and locations of some non-storm water control BMPs are shown on the Water Pollution Control Drawings (WPCDs) in Attachment B. A narrative description of each BMP follows.

- NS-1, Water Conservation Practices
- NS-3, Paving and Grinding Operations
- NS-6, Illicit Connection/Illegal Discharge Detection and Reporting
- NS-8, Vehicle and Equipment Cleaning
- NS-9, Vehicle and Equipment Fueling
- NS-10, Vehicle and Equipment Maintenance
- NS-11, Pile Driving Operations
- NS-12, Concrete Curing
- NS-13, Materials and Equipment Use over Water
- NS-14, Concrete Finishing
- NS-15, Structure Demolition/Removal
- WM-08, Concrete Waste Management

Illicit Connection/Illegal Discharge Detection and Reporting

- The Contractor will implement BMP NS-6, Illicit Connection/Illegal Discharge Detection and Reporting throughout the duration of the project.

Paving Operations

- The project will include placement of approximately 20 acres of AC pavement. Paving locations and adjacent storm drain inlets are shown on WPCDs 2, 3, and 5. Paving operations will generally be conducted in August and September as shown on the project schedule in Section 300.4. BMP NS-3, Paving and Grinding Operations, will be implemented to prevent paving materials from being discharged off-site. Covers will be placed over each inlet adjacent to

paving operations. The covers will consist of scrap carpeting placed over, and tucked under, each inlet grate. Following paving operations, the area will be swept, inlet covers will be removed, and the inlets will be inspected for paving materials.

Vehicle and Equipment Operations

- Several types of vehicles and equipment will be used on-site throughout the project, including graders, scrapers, excavators, loaders, paving equipment, rollers, trucks and trailers, backhoes, forklifts, generators, compressors, and traffic control equipment. BMPs NS-9, Vehicle and Equipment Fueling, and NS-10, Vehicle and Equipment Maintenance will be utilized to prevent discharges of fuel and other vehicle fluids. Except for concrete washout, which is addressed in Section 500.3.8, vehicle cleaning will not be performed on-site.

- A paved temporary fueling area will be constructed in the Contractor's yard as shown on WPCD-4. All self-propelled vehicles will be fueled off-site or at the temporary fueling area. Fuel trucks, each equipped with absorbent spill clean-up materials, will be used for all on-site fueling, whether at the temporary fueling area or for mobile fueling elsewhere on the site. Drip pans will be used for all mobile fueling. The fueling truck will be parked on the paved fueling area for overnight storage.

- Drip pans or absorbent pads will be used for all vehicle and equipment maintenance activities that involve grease, oil, solvents, or other vehicle fluids.

- All vehicle maintenance and mobile fueling operations will be conducted at least 50 feet away from operational inlets and drainage facilities and on a level graded area.

Concrete Saw-cutting

- The project will include approximately 600 ft of concrete saw-cutting. Saw-cutting locations and adjacent storm drain inlets are shown on WPCDs 2, 3, and 4. Estimated saw-cutting dates are shown on the schedule in Section 300.4. Saw-cutting operations will not be conducted during or immediately prior to rainfall events. Saw-cutting operations are expected to produce about 1.5 cy of waste slurry consisting of water and fine PCC grit.

- BMP WM-08, Concrete Waste Management, will be implemented to contain and dispose of saw-cutting slurries. The slurry will be vacuumed and discharged to the concrete washout facility described above. Dried and cured concrete wastes will be disposed off-site during concrete washout maintenance activities.

REQUIRED TEXT:

An inventory of construction activities and potential non-storm water discharges is provided in Section 5.3.1. The BMP Consideration Checklist in Attachment C and the following list indicates the BMPs that have been selected to control non-storm water

pollution on the construction site. Implementation and locations of some non-storm water control BMPs are shown on the Water Pollution Control Drawings (WPCDs) in Attachment B. A narrative description of each BMP follows.

- NS-6, Illicit Connection/Illegal Discharge Detection and Reporting
- NS-8, Vehicle and Equipment Cleaning
- NS-9, Vehicle and Equipment Fueling
- NS-10, Vehicle and Equipment Maintenance
-
-
-
-

INSERT ADDITIONAL NARRATIVE TEXT OF NON-STORM WATER CONTROL PRACTICES HERE OR DELETE THIS LINE (Use the "FORMAT OPTIONS" button to insert subtitles and/or paragraphs)

500.3.9 Waste Management and Materials Pollution Control

INSTRUCTIONS:

- Waste management consists of implementing procedural and structural BMPs for collecting, handling, storing and disposing of wastes generated by a construction project to prevent the release of waste materials into storm water discharges. Wastes are going to be generated during construction; however, the methods in which the wastes are collected, stored, and removed will determine the success of the waste management activities. Construction site wastes can range from residues collected from non-storm water discharges (i.e. paint removal) to general site litter and debris (i.e. empty marker paint cans).
- Materials pollution control (materials handling) consist of implementing procedural and structural BMPs for handling, storing and using construction materials to prevent the release of those materials into storm water discharges. The amount and type of construction materials to be utilized at the site will be dependent upon the type of construction and the length of the construction period. The materials may be used continuously, such as fuel for vehicles and equipment, or the materials may be used for a discrete period, such as fertilizer for landscaping.

- Waste management and materials pollution control BMPs shall be implemented to minimize storm water contact with construction materials, wastes and service areas, and to prevent materials and wastes from being discharged off-site. The primary mechanisms for storm water contact that shall be addressed are:
  - Direct contact with precipitation
  - Contact with storm water run-on and runoff
  - Wind dispersion of loose materials
  - Direct discharge to the storm drain system through spills or dumping
- Extended contact with some materials and wastes, such as asphalt cold mix and treated wood products can also leach pollutants into storm water.

- Use the following process to identify and select BMPs for waste management and materials pollution control:
  - ❑ Review construction activities to identify and quantify likely construction materials and wastes. Identify materials and wastes with special handling or disposal requirements; such as lead contaminated soils, concrete saw-cutting liquids, waste chemicals and empty chemical containers. (See Section 500.3.1)
  - ❑ Substitute safer, less polluting products where possible.
  - ❑ Use the BMP Consideration Checklist in Attachment C to identify BMPs selected to address project-specific activities.
  - ❑ List the selected BMPs and describe proposed facilities for materials storage and waste management (including on-site storage and disposal of waste). Discuss how each storm water contact mechanism will be addressed. Include schedules, inspection, and maintenance requirements. Show facility locations and details on the WPCDs where possible.
  - ❑ Describe proposed waste collection and removal schedules.

EXAMPLE:

An inventory of construction activities, materials, and wastes is provided in Section 5.3.1. The BMP Consideration Checklist in Attachment C and the following list indicate the BMPs that have been selected to control construction site wastes and materials. Implementation and locations of some materials handling and waste management BMPs are shown on the Water Pollution Control Drawings (WPCDs) in Attachment B. A narrative description of each BMP follows.

- WM-1, Material Delivery and Storage
- WM-2, Material Use
- WM-3, Stockpile Management
- WM-4, Spill Prevention and Control
- WM-5, Solid Waste Management
- WM-6, Hazardous Waste Management
- WM-8, Concrete Waste Management

Material Delivery, Storage, and Use

- In general, BMPs WM-1 and WM-2 will be implemented to help prevent discharges of construction materials during delivery, storage, and use. The general material storage area will be located in the Contractor's yard as shown on WPCD-4. A sandbag barrier (BMP SE-8) will be provided around the storage area to prevent run-on from adjacent areas. Two types of storage/containment facilities will be provided within the storage area to minimize storm water contact with construction materials:

  - Two watertight shipping containers will be used to store hand tools, small parts, and most construction materials that can be carried by hand, such as paint cans, solvents and grease.

  - A separate covered storage/containment facility will be constructed adjacent to the shipping containers to provide storage for larger items such as drums and items shipped or stored on pallets. The containment facility will consist of a 10 ft by 20 ft raised concrete pad with 6 inch curbed sides. A wood frame and corrugated tin roof and sides will be constructed to protect the facility from sun and rain. The facility will provide about 530 gal of containment volume. The containment volume is adequate to store 9-55 gallon drums pursuant to BMP WM-1.

- Very large items, such as light standards, framing materials, and stockpiled lumber, will be stored in the open in the general storage area. Such materials will be elevated with wood blocks to minimize contact with run-on.

- Spill clean-up materials, material safety data sheets, a material inventory, and emergency contact numbers will be maintained and stored in the southern shipping container.

Stockpile Management

- BMPs WM-3, Stockpile Management, will be implemented to reduce or eliminate pollution of storm water from stockpiles of soil and paving materials such as portland cement concrete (PCC) rubble, asphalt concrete (AC), asphalt concrete rubble, aggregate base, aggregate

subbase, pre-mixed aggregate, and asphlat minder (so called "cold mix" asphalt). Stockpiles will be surrounded with sediment controls (SE-5, Fiber Rolls or SE-8, Sandbag Barrier). Plastic covers (EC-7, Geotextiles & Mats), or EC-5, Soil Binders, will be used.

Spill Prevention and Control

- BMP WM-4, Spill Prevention and Control, will be implemented to contain and clean-up spills and prevent material discharges to the storm drain system. Spill prevention is also discussed above in Material Delivery, Storage, and below in the following waste management and equipment maintenance sections.

Waste Management

- BMP WM-5, Solid Waste Management, and BMP WM-6, Hazardous Waste Management will be implemented to minimize storm water contact with waste materials and prevent waste discharges. Solid wastes will be loaded directly into trucks for off-site disposal. When on-site storage is necessary, solid wastes will be stored in watertight dumpsters in the general storage area of the Contractors yard. Dumpster locations are shown on WPCD-4. AC and PCC rubble will be stockpiled in the general storage area and will be surrounded with sediment controls (SE-8, Sandbag Barrier) and covered when necessary. Solid waste, including rubble stockpiles, will be removed and disposed off-site at least weekly. ABC Waste Disposal (License CA9999999) will provide solid waste disposal services. Hazardous wastes will be stored in the shipping containers or covered containment area discussed above for materials storage. Hazardous wastes will be appropriate and clearly marked containers and segregated from other non-waste materials.

Contaminated Soil Management

- When contaminated soils are encountered, the City Engineer will be notified, the comtaminated soils will be contained, covered if stockpiled, and disposed of per WM-7, Contaminated Soil Management, and the contract documents. Employees will be instructed to recognize evidence of contaminated soil, such as buried debris, discolored soil, and unusual odors.

Concrete Residuals and Washout Wastes

- This project includes placement of about 130 cubic yards of concrete. The estimated maximum washout volume is 3.5 cubic feet. Discharges will consist of rinse water and residual concrete (Portland cement, aggregates, admixture, and water). Estimated pour dates are shown on the project schedule in Section 300.4. Concrete pours will not be conducted during or immediately prior to rainfall events.

- BMP WM-8, Concrete Waste Management, will be implemented and a below grade concrete washout facility will be constructed and maintained at the Contractor's yard as shown on WPCD-4. All excess concrete and concrete washout slurries will be discharged to the washout facility for drying. The minimum-sized washout, at 10 ft x 10 ft x 3.3 ft deep, will provide more

than sufficient volume to contain concrete washout wastes and waste collected from concrete saw-cutting operations, discussed below. BMP maintenance, waste disposal, and BMP removal will be conducted as described in WM-8. Dried-off concrete will be used as fill material if permitted by the City Engineer.

- Concrete waste solids/liquids will be removed and disposed of as required by WM-8.

Sanitary and Septic Wastes

- The Contractor will implement BMP WM-9, Sanitary and Septic Waste Management, and portable toilets will be located and maintained at the Contractor's yard for the duration of the project. Specific locations are shown on WPCD-4. Weekly maintenance will be provided each Wednesday by ABC Sanitation (license CA0Q45W) and wastes will be disposed off-site. The toilets will be located away from concentrated flow paths and traffic flow.

REQUIRED TEXT:

An inventory of construction activities, materials, and wastes is provided in Section 5.3.1. The BMP Consideration Checklist in Attachment C and the following list indicates the BMPs that have been selected to handle materials and control construction site wastes. A narrative description of each BMP follows.

- WM-1, Material Delivery and Storage
- WM- 2, Material Use
- WM-3, Stockpile Management
- WM-4, Spill Prevention and Control
- WM-5, Solid Waste Management
- WM-9, Sanitary/Septic Waste Management
-
-
-
-

INSERT ADDITIONAL NARRATIVE TEXT OF WASTE MANAGEMENT AND MATERIALS POLLUTION CONTROL PRACTICES HERE OR DELETE THIS LINE (Use the "FORMAT OPTIONS" button to insert subtitles and/or paragraphs)

500.3.10 Cost Breakdown for Water Pollution Control

EXAMPLE:

A cost breakdown itemizing the contract lump sum for water pollution control has been developed for this project and included in Attachment O. The cost breakdown reflects the items of work, quantities and costs for BMPs shown in the SWPPP, except for those construction site BMPs and permanent BMPs that are shown on the project plans and for which there is a contract item of work.

REQUIRED TEXT:

A cost breakdown itemizing the contract lump sum for water pollution control has been developed for this project and included in Attachment O. The cost breakdown reflects the items of work, quantities and costs for BMPs shown in the SWPPP, except for those construction site BMPs and permanent BMPs that are shown on the project plans and for which there is a contract item of work.

500.4 Water Pollution Control Drawings (WPCDs)

INSTRUCTIONS:

- Prepare water pollution control drawings (WPCDs) in conformance with these instructions and the requirements of the General Construction Permit requirements for a site map. Include the WPCDs as Attachment B to the SWPPP.
  - ❑ Include a cover sheet(s) listing the BMPs that will be used and any selected options shown on the fact sheets, along with construction notes and a legend.
  - ❑ The WPCDs shall show locations for the BMPs that will be used.
  - ❑ Include detailed sheets showing construction details for the BMPs that will be used. BMP Fact Sheets provided in the *California Stormwater BMP Handbook – Construction* may be used as appropriate and included in Attachment Q.
  - ❑ Additional details may be necessary to describe site-specific BMP applications.
  - ❑ Use grading sheets, drainage sheets or erosion control sheets as base sheets for the WPCDs. Use Section 500.3, "Pollutant Source Identification and BMP Selection" as a guide to pollutant sources and BMPs for construction activities. Select BMPs that are appropriate for the site and show their locations on the site map.

- The base sheets shall show the construction project in detail, including:
  - ❑ The construction site perimeter.
  - ❑ Geographic features within or immediately adjacent to the site. Include surface waters such as lakes, streams, springs, wetlands, estuaries, ponds, and the ocean.
  - ❑ Site topography before and after construction. Include roads, paved areas, buildings, slopes, drainage facilities, and areas of known or suspected contamination.
  - ❑ Permanent (post-construction) BMPs. These are usually shown on the project plans.

- Also delineate the following site information:
  - ❑ Discharge points from the project to off-site storm drain systems or receiving waters.
  - ❑ Tributary areas and drainage patterns across the project area (show using flow arrows) into each on-site storm water inlet or receiving water.
  - ❑ Tributary areas and drainage patterns to each on-site storm water inlet, receiving water or discharge point.
  - ❑ Off-site tributary drainage areas that generate run-on to the project. (Where off-site tributary drainage areas are too large to depict on the drawings, use map notes or inserts illustrating the upstream drainage areas).
  - ❑ Temporary on-site drainage(s) to carry concentrated flows.
  - ❑ Drainage patterns and slopes anticipated after major grading activities are completed.
  - ❑ Outline all areas of existing vegetation, soil cover, or native vegetation that will remain undisturbed during the project
  - ❑ Areas of cut and fill.
  - ❑ Outline all areas of soil disturbance (disturbed soil areas, DSAs). Indicate which areas will be disturbed during the rainy season and which areas will be left exposed during the rainy season.
  - ❑ Identify location(s) or areas where it is known that toxic materials have been stored, disposed, spilled, or leaked onto the construction site.
  - ❑ Identify location(s) of contaminated or hazardous soils.
  - ❑ Locate potential non-storm water discharges and activities, such as dewatering operations, concrete saw-cutting or coring, pressure washing, waterline flushing, diversions,

cofferdams, and vehicle and equipment cleaning. If operations can't be located, provide a narrative description.

- ❑ Identify location(s) or direct discharge from the construction site into a Section 303(d) list water body (discharges that do not flow into an accepted MS4 system).
- ❑ Identify locations designated for sampling the discharge(s) from areas of the construction site.

- Show proposed locations for all construction site BMPs. Include additional detail drawings if necessary to convey site-specific configurations.
  - ❑ Show temporary erosion control and temporary sediment control BMPs that will be used during construction. Including temporary on-site drainage(s) to carry concentrated flows, BMPs implemented to divert off-site drainage around or through the construction site, and BMPs that protect storm water inlets.
  - ❑ Locate site ingress and egress points and any proposed temporary construction roads.
  - ❑ Show BMPs to mitigate or eliminate non-storm water discharges.
  - ❑ Show BMPs for waste management and materials pollution control, including, but not limited to storage of soil or waste; construction material loading, unloading, storage and access areas; and areas designated for waste handling and disposal.
  - ❑ Show location(s) of temporary stockpiles and BMPs to protect those areas.
  - ❑ Show BMPs for vehicle and equipment storage, fueling, maintenance, and cleaning.
  - ❑ Show location of all post-construction BMPs.

- The SWPPP shall apply to all areas that are directly related to the construction activity, including but not limited to staging areas, storage yards, material borrow areas and storage areas, access roads, etc., whether or not they reside within the project site. Therefore:
  - ❑ If the Contractor's yard for the project is not within the project site, but is located in the vicinity of the project, the WPCDs shall show all BMPs to be used at Contractor's yard.

- The WPCDs shall reflect the Contractor's phasing and/or construction staging, and shall address the entire scope of the contract work. (The Owner/Developer/Contractor may address certain individual operations at a later date per the SWPPP amendment process established in Sections 200.1 and 200.2)

EXAMPLE:

The Water Pollution Control Drawings can be found in Attachment B of the SWPPP.

REQUIRED TEXT:

The Water Pollution Control Drawings can be found in Attachment B of the SWPPP.

500.5 Construction BMP Maintenance, Inspection, and Repair

INSTRUCTIONS:

- The purpose of storm water inspections is to evaluate BMP effectiveness and implement repairs or design changes as soon as feasible.
- Inspections shall be completed by the Contractor's SWPPM.
- Inspections are recommended on a regular basis during dry weather. The purpose of dry-weather inspections is to ensure proper implementation of BMPs that are not necessarily weather-related. Examples include non-storm water, waste management, and sediment tracking control BMPs.
- A sample maintenance, inspection, and repair program is shown in Attachment G.
- A checklist is required during each inspection. A Storm Water Quality Construction Site Inspection Checklist is included as Attachment H in Appendix A. This checklist shall be used for all inspections unless the project's contract documents require the Contractor to use a different checklist.
- Inspections are required:
    - Prior to a forecast storm
    - after a rain event that causes runoff from the construction site
    - at 24-hour intervals during extended rain events
    - at any other time(s) or intervals of time specified in the contract documents.
- Copies of the completed checklists shall be kept with the SWPPP.
- A tracking or follow-up procedure shall follow any inspection that identifies deficiencies in BMPs.

- ❑ Include a discussion of the program to inspect and maintain all BMPs as identified in the site plan or other narrative documents throughout the duration of the project. Insert the complete program as Attachment G.

EXAMPLE:

Inspections will be conducted as follows:

- Prior to a forecast storm
- after a rain event that causes runoff from the construction site
- at 24-hour intervals during extended rain events
- weekly during the rainy season
- every 2 weeks during the non-rainy season
- at any other time(s) or intervals of time specified in the contract documents

A program for Maintenance, Inspection and Repair of BMPs is shown in Attachment G.

REQUIRED TEXT

Inspections will be consudcted as follows:

- Prior to a forecast storm
- after a rain event that causes runoff from the construction site
- at 24-hour intervals during extended rain events
- at any other time(s) or intervals of time specified in the contract documents

Completed inspection checklists will be submitted to the RE within 24 hours of inspection. Copies of the completed checklists will be kept with the SWPPP.

A tracking or follow-up procedure shall follow any inspection that identifies deficiencies in BMPs. A program for Maintenance, Inspection and Repair of BMPs is shown in Attachment G.

500.6 Post-Construction Storm Water Management

500.6.1 Post-Construction Control Practices

INSTRUCTIONS:

- Post-Construction BMPs are permanent measures installed during construction, designed to reduce or eliminate pollutant discharges from the site after construction is completed. The Owner/Developer and/or Permittee may provide listings, descriptions and special operations and maintenance requirements for post-construction BMPs.
  - ❑ Provide descriptions of the BMPs employed after all construction phases have been completed at the site (Post-Construction BMPs). Examples of post-construction measures are:
    - Infiltration basins;
    - Detention/retention devices;
    - Vegetated strips and/or swales;
    - Biofilters;
    - Permanent erosion control, seeding and planting;
    - Outlet protection/velocity dissipation devices;
    - Earth dikes, drainage swales, and lined ditches;
    - Rock slope protection;
    - Mulching;
    - Other proprietary permanent structural BMPs; and
    - Verification that interior drains are not connected to a storm sewer system.
- When an Owner/Developer/Contractor sells or leases individual lots or properties, there may be instances when the new Owner(s)/occupant(s) get involved in construction activities that may contribute to the discharge of pollutants into storm water. It is suggested that the Owner/Developer/Contractor develops a notification pamphlet or brochure that makes the new Owner(s)/occupant(s) aware of the potential for unauthorized discharges and practices to limit, reduce or eliminate the risks of discharging pollutants into storm water.

EXAMPLE:

The following are the post-construction BMPs that are to be used at this construction site after all construction is complete:

- Outlet protection/velocity dissipation devices at all culvert outlets.
- All slopes will be seeded with, planted and protected with wood mulch.
- Numerous drainage strips and swales.
- An infiltration basin.

REQUIRED TEXT:

The following are the post-construction BMPs that are to be used at this construction site after all construction is complete:

- LIST
-
-
-
-
-

INSERT ADDITIONAL NARRATIVE TEXT HERE OR DELETE THIS LINE (Use the "FORMAT OPTIONS" button to insert subtitles and/or paragraphs)

500.6.2 Operation/Maintenance after Project Completion

INSTRUCTIONS:

- Describe the following information regarding post-construction BMPs. The Owner/Developer/Contractor may provide specific language for any operations and maintenance requirements of post-construction control practices. Any pertinent language provided by the Owner/Developer/Contractor shall be added to this section of the SWPPP.
  - ❑ List the parties responsible for long-term operation and maintenance of permanent BMPs. Examples of responsible parties are: a Home Owners Association (HOA); a local agency or municipality; or the Owner/Developer/Contractor.

EXAMPLE:

The post-construction BMPs that are described above will be funded and maintained by the Rancho del Cielo Home Owners Association (RCHOA).

REQUIRED TEXT:

The post-construction BMPs that are described above will be funded and maintained by ENTER RESPONSIBLE PARTY

INSERT ANY ADDITIONAL LANGUAGE PROVIDED BY OWNER/DEVELOPER/CONTRACTOR HERE. DELETE THIS LINE (Use the "FORMAT OPTIONS" button to insert subtitles and/or paragraphs)

500.7 Training

INSTRUCTIONS:

- Individuals responsible for SWPPP preparation, implementation, and permit compliance are required to be trained, and the SWPPP shall document all training. This includes those personnel responsible for installation, inspection, maintenance, and repair of BMPs. Describe the types of training that the Contractor's inspection, maintenance, and repair personnel have received or will receive that are directly related to storm water pollution prevention.
- Subcontractors and employees whose activities may generate non-storm water discharges shall be trained to minimize the potential for such discharges.
- Training may be both formal and informal
- Formal storm water pollution prevention or erosion and sediment control training sessions may include certification as a Certified Professional in Erosion Control and Sediment Control (CPESC); workshops offered by the SWRCB, RWQCB, Community College or University of California Extension, or other locally recognized agencies or professional organizations such as the International Erosion Control Association (IECA), Association of Bay Area Governments (ABAG), Association of General Contractors (AGC), etc. Owners/Developers/Contractors are encouraged to contact the RWQCB or the SWRCB to inquire about availability of training.
- A listing of training organizations, subject matter and classes are located at http://www.dot.ca.gov/hq/construc/stormwater.html
- The Storm Water Pollution Prevention Manager (SWPPM) should have a minimum of 24 hours (3 days) of formal storm water pollution prevention training.
- On-site storm water pollution prevention training shall be conducted on an on-going basis.

- ❑ Document formal and informal storm water training using the sample Trained Contractor Personnel Log sheet provided as Attachment I.
- ❑ Formal storm water training may be documented by providing a list of classes and copies of class completion documents.

EXAMPLE:

Section 300.5 shows the name of the Owner/Developer/Contractor's Storm Water Pollution Prevention Manager (SWPPM). This person has received the following training:

- Two (2) day construction storm water management course given by the County of Los Angeles Storm Water Program in October of 1999.
- Attended 2001 IECA 3-day Conference.

On-going, formal training sessions will be selected from one of the following organizations:

- City of Los Angeles Storm Water Program
- County of Los Angeles Storm Water Program
- State of California Regional Water Quality Control Board
- IECA, ABAG and/or AGC sponsored training
- USEPA sponsored training
- Recognized municipal stakeholder organizations throughout California
- Professional organizations and societies in the building and construction field

Other Contractor personnel attending tailgate training will document attendance using the form in Attachment I. Informal training will include tailgate site briefings to be conducted bi-weekly and address the following topics:

- Erosion Control BMPs
- Sediment Control BMPs
- Non-Storm Water BMPs
- Waste Management and Materials Pollution Control BMPs
- Emergency Procedures specific to the construction site storm water management

This SWPPP was prepared by ABC Engineering, under the direction of Mr. John Doe, a registered Professional Engineer in the State of California. Mr. Doe has over 5 years of experience in the preparation of Storm Water Pollution Prevention Plans (SWPPPs), and has the following previous experience:

- Has prepared over 15 project-specific SWPPPs

- Over 15 years of experience in storm drain design, hydrology, and hydraulics
- SWPPP Preparation training sponsored by Orange County Storm Water Program, June 2002
- Attended the 1999, 2000, 2001, and 2002 International Erosion Control Association (IECA) 3-day conferences
- Received certification as a Certified Professional in Erosion Control and Sediment Control (CPSEC) in July 2001
- Attended "NPDES Storm Water Permit Compliance" course in spring 2002, sponsored by the American Society of Civil Engineers (ASCE)

REQUIRED TEXT:

Section 300.5 shows the name of the Owner/Developer/Contractor's Storm Water Pollution Prevention Manager (SWPPM). This person has received the following training:

- LIST
-
-
-

The training log showing formal and informal training of various Contractor personnel is shown in Attachment I.

INSERT HERE ANY ADDITIONAL TEXT REGARDING TRAINING OF PERSONNEL.

This SWPPP was prepared by INSERT COMPANY, NAME AND PROFESSIONAL REGISTRATION OR OTHER QUALIFICATIONS OF THE PERSON THAT PREPARED THE SWPPP.

500.8 List of Subcontractors

INSTRUCTIONS:

- The SWPPP is required to include a list of names of all Contractors, (or subcontractors) and individuals responsible for implementation of the SWPPP. This list shall include telephone numbers and addresses. Specific areas of responsibility of each subcontractor (type of work to be performed) and emergency contact numbers shall also be included.
- A sample sub-contractor notification letter and log is provided as Attachment J. Discuss pertinent conditions in the contractual agreement and/or letter of approval that address subcontractor responsibility for General Permit compliance.

- ❑ Include a completed Attachment J in the SWPPP.

EXAMPLE:

All Contractors and subcontractors will be notified of the requirement for storm water management measures during the project. A list of contractors will be maintained and included in the SWPPP. If subcontractors change during the project, the list will be updated accordingly. The sub-contractor notification letter and log is included in the SWPPP as Attachment J.

REQUIRED TEXT:

All contractors and subcontractors will be notified of the requirement for storm water management measures during the project. A list of contractors will be maintained and included in the SWPPP. If subcontractors change during the project, the list will be updated accordingly. The subcontractor notification letter and log is included in the SWPPP as Attachment J.

500.9 Other Plans/Permits

INSTRUCTIONS:

- ❑ The SWPPP shall incorporate appropriate elements of other plans or permits required by local, State, or Federal agencies.
- ❑ Include a copy of the General Permit CAS000002.
- ❑ Provide a list of all of the other plans and permits in this section, and describe any special requirements for each permit. Insert additional bullets as needed. Delete bullets if not needed.
- ❑ Include a copy of all other plans/permits as Attachment N of the SWPPP.

EXAMPLE:

Following is a list of the plans and permits included in Attachment N of this SWPPP.

- State Water Resources Control Board (SWRCB) Resolution No. 99-08-DWQ, National Pollutant Discharge Elimination System (NPDES) General Permit No. CAS000002, Waste Discharge

Requirements (WDRs) for Discharges of Storm Water Runoff Associated with Construction Activity, August 1999, and amendments.

- California Department of Fish and Game Code Section 1601 Streambed Alteration Agreement
- Clean Water Act Section 401 Water Quality Certification issued by the State of California as processed through the RWQCB
- U.S. Army Corps of Engineers Clean Water Act Section 404 Nationwide Permit

REQUIRED TEXT:

Attachment N includes copies of other local, state, and federal plans and permits. Following is a list of the plans and permits included in Attachment N:

- State Water Resources Control Board (SWRCB) Order No. 99-08-DWQ, National Pollutant Discharge Elimination System (NPDES) General Permit No. CAS000002, Waste Discharge Requirements (WDRs) for Discharges of Storm Water Runoff Associated with Construction Activity, August 1999, and amendments.
- INSERT NAME(S), DATE(S) AND SOURCES OF OTHER LOCAL, STATE OR FEDERAL PLANS OR PERMITS HERE

Section 600
Monitoring Program and Reports

600.1 Site Inspections

INSTRUCTIONS:

- ❑ Include a Separator and Tab for Section 600 for ready reference.

- The site shall be inspected:
  - Prior to a forecast storm
  - after a rain event that causes runoff from the construction site
  - at 24-hour intervals during extended rain events
  - as specified in the contract documents

- BMPs shall be evaluated for adequacy, proper implementation, and whether additional BMPs are required in accordance with the terms of the Permits and the contract documents.
- Implementation of non-storm water discharge BMPs shall be verified and their effectiveness evaluated.
- One-time discharges of non-storm water shall be inspected when such discharges occur.
- The results of the inspections and assessments shall be recorded on the Storm Water Quality Construction Site Inspection Checklist included in Appendix A, Attachment H. This checklist shall be used for all inspections.
- A copy of each completed Storm Water Quality Construction Site Inspection Checklist shall be provided to the Owner/Developer/Contractor and a copy attached to the on-site SWPPP. A tracking or follow-up procedure shall follow any inspection that identifies deficiencies in BMPs.

REQUIRED TEXT:

The Owner/Developer/Contractor will inspect the site prior to a forecast storm, after a rain event that causes runoff from the construction site, at 24-hour intervals during extended rain events, and as specified in the contract documents. The results of all inspections and assessments will be documented, a copy shall be provided to the Owner/Developer/Contractor within 24 hours of the inspection, and copies of the completed inspection checklists will be maintained with the SWPPP. Site inspections

conducted for monitoring purposes will be performed using the inspection checklist shown in Attachment H.

The name(s) and contact number(s) of the assigned inspection personnel are listed below:

Assigned inspector: NAME OF INSPECTOR Contact phone: TELEPHONE NUMBER

600.2 Non-Compliance Reporting

INSTRUCTIONS:

- Discharges will be reported to the Owner/Developer/Contractor verbally upon discovery and in writing within 7 days of occurrence, or as specified in the contract documents. A sample Notice of Non-Compliance form is provided in Attachment K and a sample form for logging discharges is shown in Attachment U.
- Note: USEPA has issued regulations that define Reportable Quantity (RQ) levels for oil and hazardous substances. These regulations are found in the Code of Federal Regulations at 40 CFR Part 110, Part 117, or Part 302.
  - For example, an oily sheen in storm water runoff as a result of a spill or release is an exceedance of a RQ level. The RQ level for dieldrin, a pesticide, is 1 kilogram. A spill or release of one or more kg of dieldrin is an exceedance of the RQ threshold.

REQUIRED TEXT:

If a discharge occurs or if the project receives a written notice of non-compliance, the Contractor will immediately notify the Owner/Developer; will file a written report to the Owner/Developer within 7 days of the discharge or notice; and will file a written report to the Regional Water Quality Control Board (RWQCB) within 30 days or identification of non-compliance. Corrective measures will be implemented immediately following the discharge, notice or order. A sample Notice of Non-Compliance (NONC) form is provided in Attachment K. All discharges shall be documented on a Discharge Reporting Log using the example form in Appendix A, Attachment U.

The report to the Owner/Developer and to the RWQCB will contain the following items:

- The date, time, location, nature of operation, and type of unauthorized discharge, including the cause or nature of the notice or order,
- The control measures (BMPs) deployed before the discharge event, or prior to receiving notice or order,

- The date of deployment and type of control measures (BMPs) deployed after the discharge event, or after receiving the notice or order, including additional measures installed or planned to reduce or prevent re-occurrence, and
- An implementation and maintenance schedule for any affected BMPs

600.3 Record Keeping and Reports

REQUIRED TEXT:

Records shall be retained for a minimum of three years for the following items:

- Site inspections
- Compliance certifications
- Discharge reports
- Approved SWPPP document and amendments

600.4 Sampling and Analysis Plan for Sediment

INSTRUCTIONS:

- If the project has the potential to discharge directly into a water body listed as impaired due to Sedimentation/Siltation and/or Turbidity pursuant to Section 303(d) of the Clean Water Act, the SWPPP must include a Sampling and Analysis Plan (SAP) for Sediment. The purpose of a SAP for Sediment is to determine if BMPs implemented on the construction site are effective for preventing impacts to levels of sedimentation/siltation and/or turbidity in 303(d) listed water bodies impaired by those pollutants.
  - Refer to the SWRCB web site at http://www.swrcb.ca.gov/tmdl/docs/303d98.pdf for the list of 303(d) water bodies in California. Determine if the project will discharge directly into one of the 303(d) water bodies listed as impaired due to Sedimentation/Siltation and/or Turbidity.
  - ***Direct discharge*** is defined as a point source or conveyance that discharges directly to the 303(d) listed water body that does not first flow through a tributary river or stream (that itself is not listed as impaired) or combine with storm water from off-site in a municipal separate storm sewer system (MS4).
- Include the following required text to identify whether or not the project discharges directly to a 303(d) listed water body.

REQUIRED TEXT:

This project does have the potential to discharge directly to a water body listed as impaired due to Sedimentation/Siltation and/or Turbidity pursuant to Clean Water Act, Section 303(d).

INSTRUCTIONS:

- If the project does not discharge to a 303(d) listed water body, delete Sections 600.4.1 through 600.4.9 from the template and continue with Section 600.5.
- If the project does discharge to a 303(d) listed water body, complete Sections 600.4.1 through 600.4.9 by following the instructions provided at the beginning of each section.

600.4.1 Scope of Monitoring Activities

INSTRUCTIONS:

- ❑ Provide the name(s) of the 303(d) listed water bodies and identify the reason for impairment. (Sedimentation/Siltation and/or Turbidity)
- ❑ Describe the location(s) of direct discharge from the project site to each 303(d) listed water body and show the locations of direct discharge on the WPCDs.
- ❑ Include the appropriate required text to identify whether run-on to the project site may combine with storm water and directly discharge to the 303(d) water body. If the project does receive run-on, describe the locations of run-on and show the locations on the WPCDs.

REQUIRED TEXT:

This project discharges directly into [specify 303(d) water body], a water body listed as impaired due to [specify reason(s) for impairment: Sedimentation/Siltation and/or Turbidity] pursuant to Clean Water Act, Section 303(d). This Sampling and Analysis Plan (SAP) has been prepared pursuant to the requirements of the General Permit (including Resolution 2001-046). The SAP describes the sampling and analysis strategy and schedule for monitoring [specify impairment: Sedimentation/Siltation and/or Turbidity] in the 303(d) listed water body and potential increases in the [specify impairment: Sedimentation/Siltation and/or Turbidity] levels caused by storm water discharges from the project site.

The project has the potential for direct (concentrated) storm water discharges to [specify 303(d) water body] at the following locations, as shown on the WPCDs in Attachment B.

-
-
-

REQUIRED TEXT for PROJECTs that do not RECEIVE RUN-ON:

The project does not receive run-on with the potential to combine with storm water that discharges directly to the 303(d) listed water body.

REQUIRED TEXT for PROJECTs that RECEIVE RUN-ON:

The project receives run-on with the potential to combine with storm water that discharges directly to the 303(d) listed water body at the following locations, as shown on the WPCDs in Attachment B:

-
-
-

600.4.2 Monitoring Strategy

INSTRUCTIONS:

- ❑ Describe the sampling schedule for monitoring the impacts of direct storm water discharges to the 303(d) water body.
- ❑ Describe the sampling locations for monitoring the impacts of direct storm water discharges from the project to the 303(d) water body.
- ❑ Describe the rationale for the selection of sampling locations.
- ❑ Identify a location upstream of all direct discharge from the construction site that appears to represent the flow of the water body, to analyze the prevailing condition of the receiving water without any influence from the construction site. Describe exactly, either using GPS coordinates of post kilometer/post mile, where the sample will be collected. Note: Sampling too far upstream may not show prevailing conditions immediately upstream of the construction site.

- ❑ Identify a location immediately downstream from the last point of direct discharge from the construction site that appears to represent the nature of the flow to analyze potential pollutants to the 303(d) listed water body from the project. Describe exactly where the sample will be collected. Downstream samples should represent the receiving water mixed with flow from the construction site. Note: Sampling too far downstream may detect pollutants from other discharges.
- ❑ For projects that, in Section 600.4.1, identified locations of run-on to the project, include the required text to identify run-on sampling location(s) to determine potential impairments that originate off the project site. Describe exactly where the sample will be collected.
- ❑ Show all sampling locations on the WPCDs.

- Locate sampling locations in areas that are safe, out of the path of heavy traffic, and reasonably accessible.
  - ❑ Describe surrounding areas such as agricultural fields, or other sites that may contribute run-on sediment to the site.
  - ❑ Do not locate sampling points upstream or downstream of point sources or confluences to minimize backwater effects or poorly mixed flows.
  - ❑ Do not locate sampling points directly downstream from a bridge, which may contaminate flows from the bridge structure or from road surface runoff.

REQUIRED TEXT:

Sampling Schedule

Upstream, downstream, discharge, and run-on samples, if applicable, shall be collected for [specify impairment: Sedimentation/Siltation and/or Turbidity] during the first two hours of discharge from rain events that result in a direct discharge from the project site to [enter 303(d) water body]. Samples shall be collected during daylight hours (sunrise to sunset) and shall be collected regardless of the time of the year, status of the construction site, or day of the week.

All storm events that occur during daylight hours will be sampled up to a maximum of four rain events within a 30-day period. In conformance with the U.S. Environmental Protection Agency definition, a minimum of 72 hours of dry weather will be used to distinguish between separate rain events.

Sampling Locations

Sampling locations are based on proximity to identified discharge or run-on location(s), accessibility for sampling, personnel safety, and other factors in accordance with the applicable requirements in the General Permit. Sampling locations are shown on the WPCDs and include:

- A sample location (designated number) is upstream of all direct discharge from the construction site for the collection of a control sample to be analyzed for the prevailing condition of the receiving water without any influence from the construction site. The control sample will be used to determine the background levels of [specify impairment: Sedimentation/Siltation and/or Turbidity] in the 303(d) listed water body upstream of the project, if any.
    - Sample location number is located .
- A sample location (designated number) is immediately downstream from the last point of direct discharge from the construction site for the collection of a sample to be analyzed for potential increases in [specify impairment: Sedimentation/Siltation and/or Turbidity] in the 303(d) listed water body caused by the storm water discharged from the project, if any.
    - Sample location number is located .

REQUIRED TEXT only for PROJECTs that RECEIVE RUN-ON:

- [Enter number of locations] sampling location(s) (designated number(s)) has been identified for the collection of samples of run-on to the project site with the potential to combine with discharges from the construction site in other than MS4 to the 303(d) water body. These samples will identify potential [specify impairment: Sedimentation/Siltation and/or Turbidity] that originates off the project site and contributes to direct storm water discharges from the construction site to the 303(d) listed water body.

If the following is not needed, place cursor in a field and use the "Delete Line" option on the toolbar.

- Sample location number is located .
- If needed Sample location number is located .

- If needed Sample location number is located .

600.4.3 Monitoring Preparation

INSTRUCTIONS:

- ❑ Identify whether samples will be collected by the Contractor's personnel, by a commercial laboratory, or by an environmental consultant.
- ❑ Identify training and experience of individuals responsible for collecting water samples.
- ❑ Identify Contractor's health and safety procedures for sampling personnel.
- ❑ Identify alternate sampling personnel in case of emergency, sick leave, and/or vacations during storm water monitoring. Identify training of alternate sampling personnel.
- ❑ Identify the state-certified laboratory(ies) that will analyze the samples. For a list of California state-certified laboratories, access the following web site: www.dhs.ca.gov/ps/ls/elap/html/lablist_county.htm
- ❑ Include the appropriate required text to describe the strategy for ensuring that adequate sample collection supplies are available to the project in preparation for a sampling event.
- ❑ Describe the strategy for ensuring that appropriate field-testing equipment is available to the project in preparation for a sampling event. If equipment is to be rented, contact a local environmental rental company, such as www.totalsafetyinc.com.

REQUIRED TEXT IF Contractor personnel will collect samples:

Samples on the project site will Select one of the following Contractor sampling personnel:

Name/Telephone Number:	Name Phone Number
Name/Telephone Number:	Name Phone Number
Alternate(s)/Telephone Number:	Name Phone Number
Alternate(s)/Telephone Number:	Name Phone Number

Prior to the rainy season, all sampling personnel and alternates will review the SAP. Qualifications of designated Contractor personnel describing environmental sampling training and experience are provided in Attachment I.

An adequate stock of supplies and equipment for monitoring [specify impairment: Sedimentation/Siltation and/or Turbidity] will be available on the project site or provided by [specify laboratory] prior to a sampling event. Monitoring supplies and equipment will be stored in a cool-temperature environment that will not come into contact with rain or direct sunlight. Sampling personnel will be available to collect samples in accordance with the sampling schedule.

Supplies maintained at the project site will include, but will not be limited to, surgical gloves, sample collection equipment, coolers, appropriate number and volume of sample bottles, identification labels, re-sealable storage bags, paper towels, personal rain gear, ice, Sampling Activity Log forms, and Chain of Custody (COC) forms.

The Contractor will obtain and maintain the field-testing instruments, as identified in Section 600.4.5, for analyzing samples in the field by Contractor sampling personnel. Safety practices for sample collection will be in accordance with the [enter title and publication date of contactor health and safety plan for the project].

REQUIRED TEXT only if consultant or laboratory will collect samples:

Samples on the project site will be collected by the following [specify laboratory or environmental consultant]:

Company Name:

Address:

Telephone Number:

Point of Contact:

Qualifications of designated Contractor personnel describing environmental sampling training and experience are provided in Attachment I.

SWPPM will contact [specify name of laboratory or environmental consultant] [enter number of hours] hours prior to a predicted rain event to ensure that adequate sample collection personnel, supplies and field test equipment for monitoring [specify impairment: Sedimentation/Siltation and/or Turbidity] are available and will be mobilized to collect samples on the project site in accordance with the sampling schedule.

[Specify name of laboratory or environmental consultant] will obtain and maintain the field-testing instruments, as identified in Section 600.4.5, for analyzing samples in the field by their sampling personnel.

600.4.4 Sample Collection and Handling

INSTRUCTIONS:

- ❑ Describe sample collection procedures to be used on the project.

- Run-on samples could be collected using the following procedures:
  - Place several rows of sandbags in a half circle directly in the path of the run-on to pond water and wait for enough water to spill over. Then place a cleaned or decontaminated flexible hose along the top and cover with another sandbag so that ponded water will only pour through the flexible hose and into sample bottles. Do not reuse the same sandbags in future sampling events as they may cross-contaminate future samples.
  - Place a cleaned or decontaminated dustpan with open handle in the path of the run-on so that water will pour through the handle and into sample bottles.
- For laboratory analysis, all sampling, sample preservation, and analyses must be conducted according to test procedures under 40 CFR Part 136.
- For a list of California state-certified laboratories, access the following web site: www.dhs.ca.gov/ps/ls/elap/html/lablist_county.htm

  - ❑ Describe sample-handling procedures.
  - ❑ Describe decontamination waste disposal requirements (i.e., TSP soapy water shall not be discharged to the storm drainage system or receiving water).
  - ❑ Describe sample collection documentation procedures.
  - ❑ Describe procedures for recording and correcting sampling data.
- A Chain of Custody (COC) form is required to be submitted to the laboratory with the samples to trace the possession and handling of samples from collection through analysis.
- A Sampling Activity Log shouldbe kept to document details of all sampling events and to record results for samples analyzed in the field.
- Each sample bottle is required to have a proper and complete identification label.

REQUIRED TEXT:

Sample Collection Procedures

Grab samples will be collected and preserved in accordance with the methods identified in Table 600-1, "Sample Collection, Preservation and Analysis for Monitoring Sedimentation/Siltation and/or Turbidity" provided in Section 600.4.5. Only personnel trained in proper water quality sampling will collect samples.

Upstream samples will be collected to represent the condition of the water body upgradient of the construction site. Downstream samples will be collected to represent the water body mixed with direct flow from the construction site. Samples will not be collected directly from ponded, sluggish, or stagnant water.

Upstream and downstream samples will be collected using one of the following methods:

- Placing a sample bottle directly into the stream flow in or near the main current upstream of sampling personnel, and allowing the sample bottle to fill completely;

  OR,

- Placing a decontaminated or 'sterile' bailer or other 'sterile' collection device in or near the main current to collect the sample, and then transferring the collected water to appropriate sample bottles, allowing the sample bottles to fill completely.

Run-on samples, if applicable, will be collected to identify potential sedimentation/siltation and/or turbidity that originates off the project site and contributes to direct discharges from the construction site to the 303(d) listed water body. Run-on samples will be collected downgradient and within close proximity of the point of run-on to the project by pooling or ponding water and allowing the ponded water to spill over into sample bottles directly in the stream of water.

To maintain sample integrity and prevent cross-contamination, sampling collection personnel will:

- Wear a clean pair of surgical gloves prior to the collection and handling of each sample at each location.
- Not contaminate the inside of the sample bottle by not allowing it to come into contact with any material other than the water sample.
- Discard sample bottles or sample lids that have been dropped onto the ground prior to sample collection.

- Not leave the cooler lid open for an extended period of time once samples are placed inside.
- Not touch the exposed end of a sampling tube, if applicable.
- Avoid allowing rainwater to drip from rain gear or other surfaces into sample bottles.
- Not eat, smoke, or drink during sample collection.
- Not sneeze or cough in the direction of an open sample bottle.
- Minimize the exposure of the samples to direct sunlight, as sunlight may cause biochemical transformation of the sample to take place.
- Decontaminate sampling equipment prior to sample collection using a TSP-soapy water wash, distilled water rinse, and final rinse with distilled water.
- Dispose of decontamination water/soaps appropriately; i.e., not discharge to the storm drain system or receiving water.

Sample Handling Procedures

REQUIRED TEXT only If laboratory will analyze ALL or SOME OF THE samples: Select Yes/No

Immediately following collection, sample bottles for laboratory analytical testing will be capped, labeled, documented on a Chain of Custody (COC) form provided by the analytical laboratory, sealed in a re-sealable plastic storage bag, placed in an ice-chilled cooler, at as near to 4 degrees Celsius as practicable, and delivered within 24 hours to the following California state-certified laboratory:

Laboratory Name:

Address:

Telephone Number:

Point of Contact:

REQUIRED TEXT only if Contractor will analyze ALL OR SOME OF THE samples:

Immediately following collection, samples for field analysis will be tested in accordance with the field instrument manufacturer's instructions and results recorded on the Sampling Activity Log.

REQUIRED TEXT:

Sample Documentation Procedures

All original data documented on sample bottle identification labels, Chain of Custody forms, Sampling Activity Logs, and Inspection Checklists will be recorded using waterproof ink. These will be considered accountable documents. If an error is made on an accountable document, the individual will make corrections by lining through the error and entering the correct information. The erroneous information will not be obliterated. All corrections will be initialed and dated. Copies of the Sampling Activity Log and Chain of Custody form are provided in Attachment R. Sampling and field analysis activities will be documented using the following:

- Sample Bottle Identification Labels: Sampling personnel will attach an identification label to each sample bottle. At a minimum, the following information will be recorded on the label, as appropriate:
  - Project name
  - Project number
  - Unique sample identification number and location.
    [Project Number]-[Six digit sample collection date]-[Location]
    (*Example:* 0G5304-081801-Upstream).
    Quality assurance/quality control (QA/QC) samples shall be identified similarly using a unique sample number or designation
    (*Example:* 0G5304-081801-DUP1).
  - Collection date/time (No time applied to QA/QC samples)
  - Analysis constituent

- Sampling Activity Logs: A log of sampling events will identify:
  - Sampling date
  - Separate times for sample collection of upstream, downstream, run-on, and QA/QC samples recorded to the nearest minute
  - Unique sample identification number and location

- Analysis constituent
- Names of sampling personnel
- Weather conditions (including precipitation amount)
- Field analysis results
- Other pertinent data

- Chain of Custody (COC) forms: All samples to be analyzed by a laboratory will be accompanied by a COC form provided by the laboratory. Only the sample collectors will sign the COC form over to the lab. COC procedures will be strictly adhered to for QA/QC purposes.
- Storm Water Quality Construction Inspection Checklists: When applicable, the Contractor's storm water inspector will document on the checklist that samples for sedimentation/siltation and/or turbidity were taken during a rain event.

600.4.5 Sample Analysis

INSTRUCTIONS:

- ❑ Identify the tests to be used on the project by completing Table 600-1, "Sample Collection, Preservation and Analysis for Monitoring Sedimentation/Siltation and/or Turbidity".
- ❑ For 303(d) listed water bodies impaired due to Sedimentation/Siltation, select YES for (b) and (c) OR YES for (b), and (c) and/or (a).
- ❑ For 303(d) listed water bodies impaired due to Turbidity, select YES for (d).
- ❑ For each test selected, fill in the blank fields in the table. Contact the selected laboratory for the specifications to obtain the necessary information.

REQUIRED TEXT:

Samples will be analyzed for the constituents indicated in Table 600-1, "Sample Collection, Preservation and Analysis for Monitoring Sedimentation/Siltation and/or Turbidity".

Table 600-1
Sample Collection, Preservation and Analysis for Monitoring Sedimentation/Siltation and/or Turbidity

Constituent [1]	Analytical Method	Test to be Used?	Sample Preservation	Minimum Sample Volume	Sample Bottle	Maximum Holding Time	Reporting Limit
(a) Suspended Sediment Concentration (SSC)	ASTM D3977-97	☐ YES ☐ NO	Store at 4˚ C (39.2˚ F)				
(b) Settleable Solids (SS)	EPA 160.5 Std Method 2540(f)	☐ YES ☐ NO	Store at 4˚ C (39.2˚ F)				mL/L/hr
(c) Total Suspended Solids (TSS)	EPA 160.2 Std Method 2540(d)	☐ YES ☐ NO	Store at 4˚ C (39.2˚ F)				mg/L
(d) Turbidity	EPA 180.1 Std Method 2130(b)	☐ YES ☐ NO	Store at 4˚ C (39.2˚ F)				NTU

Notes: [1] Samples shall be analyzed by using methods (b) and (c), or only method (a)

ASTM – American Society for Testing and Materials
°C – Degrees Celsius
°F – Degrees Fahrenheit
EPA – U.S. Environmental Protection Agency
L – Liter
mL/L/hr – Milliliters per liter per hour
mg/L – Milligrams per liter
mL – Milliliters
NTU – Nephelometric Turbidity Unit
Std Method – Per the *Standard Methods for the Examination of Water and Wastewater*, 20th Edition, American Water Works Association

REQUIRED TEXT only If samples will be analyzed in the field: Select Yes/No

For samples collected for field analysis, collection, analysis and equipment calibration will be in accordance with the field instrument manufacturer's specifications.

The following field instrument(s) will be used to analyzed the following constituents:

Field Instrument	Constituent

- The instrument(s) will be maintained in accordance with manufacturer's instructions.
- The instrument(s) will be calibrated before each sampling and analysis event.
- Maintenance and calibration records will be maintained with the SWPPP.

600.4.6 Quality Assurance/Quality Control

REQUIRED TEXT:

For an initial verification of laboratory or field analysis, duplicate samples will be collected at a rate of 10 percent or 1 duplicate per sampling event. The duplicate sample will be collected, handled, and analyzed using the same protocols as primary samples, and will be collected where contaminants are likely, and not on the upstream sample. A duplicate sample will be collected immediately after the primary sample has been collected. Duplicate samples will not influence any evaluations or conclusions; however, they will be used as a check on laboratory quality assurance.

600.4.7 Data Management and Reporting

REQUIRED TEXT:

A copy of all water quality analytical results and QA/QC data will be submitted to the Owner/Developer within 5 days of sampling (for field analyses) and within 30 days of sampling (for laboratory analyses). Lab reports and COCs will be reviewed for consistency between lab methods, sample identifications, dates, and times for both primary samples and QA/QC samples. All data, including COC forms and Sampling Activity Logs, shall be kept with the SWPPP document.

600.4.8 Data Evaluation

INSTRUCTIONS:

- The General Permit requires that BMPs be implemented on the construction site to prevent a net increase of sediment load in storm water discharges relative to pre-construction levels. The upstream sample, while not representative of pre-construction levels, provides a basis for comparison with the sample collected downstream of the construction site.
- The downstream water quality sample analytical results will be evaluated to determine if the downstream sample(s) show elevated levels of the tested constituent relative to the levels found in the upstream (control) sample. The run-on sample analytical results will be used as an aid in evaluating potential offsite influences on water quality results. If elevated levels of pollutants are identified, additional BMPs must be implemented in an iterative manner to prevent a net increase in pollutants to receiving waters.

REQUIRED TEXT:

An evaluation of the water quality sample analytical results, including figures with sample locations, will be submitted to the Owner/Developer/Contractor with the water quality analytical results and the QA/QC data for every event that samples are collected. Should the downstream sample concentrations exceed the upstream sample concentrations, the Storm Water Pollution Prevention Manager or other personnel will evaluate the BMPs, site conditions, surrounding influences (including the run-on sample analysis), and other site factors to determine the probable cause for the increase.

As determined by the data and project evaluation, appropriate BMPs will be repaired or modified to mitigate increases in sediment concentrations in the water body. Any revisions to the BMPs will be recorded as an amendment to the SWPPP.

600.4.9 Change of Conditions

REQUIRED TEXT:

Whenever SWPPP monitoring, pursuant to Section B of the General Permit, indicates a change in site conditions that might affect the appropriateness of sampling locations, testing protocols will be revised accordingly. All such revisions will be recorded as amendments to the SWPPP.

600.5 Sampling and Analysis Plan for Non-Visible Pollutants

INSTRUCTIONS:

- The project SWPPP must include a Sampling and Analysis Plan (SAP) for pollutants not visually detectable in storm water. The purpose of a SAP for Non-Visible Pollutants is to determine if BMPs implemented on the construction site are effective in preventing pollutants not visually detectable in storm water, from leaving the construction site and potentially impacting water quality objectives.

REQUIRED TEXT:

This Sampling and Analysis Plan (SAP) for Non-Visible Pollutants describes the sampling and analysis strategy and schedule for monitoring non-visible pollutants in storm water discharges from the project site and off-site activities directly related to the project, in accordance with the requirements of Section B of the General Permit, including SWRCB Resolution 2001-046.

600.5.1 Scope of Monitoring Activities

INSTRUCTIONS:

- ❑ Identify the general sources and locations of potential non-visible pollutants on the project site in the following categories:
  - Materials or wastes as identified in Section 500.3.1, containing potential non-visible pollutants and that are not stored under watertight conditions.
  - Materials or wastes containing potential non-visible pollutants that are stored under watertight conditions, but (1) a breach, leakage, malfunction, or spill is observed; and (2) the leak or spill has not been cleaned up prior to the rain event; and (3) there is the potential for discharge of non-visible pollutants to surface waters or drainage system.
  - Construction activities such as application of fertilizers, pesticides, herbicides or non-pigmented curing compounds, that have occurred during a rain event or within 24 hours preceding a rain event, and there is the potential for discharge of pollutants to surface waters or drainage system.
  - Existing site features contaminated with non-visible pollutants as identified in Section 500.3.3.
  - Applications of soil amendments, including soil stabilization products, with the potential to alter pH levels or other properties of soil (such as chemical properties, engineering properties, or erosion resistance), or contribute toxic pollutants to storm water runoff, and there is the potential for discharge of pollutants to surface waters or drainage system (unless independent test data are available that demonstrate acceptable concentration levels of non-visible pollutants in the soil amendment).

- Certain soil amendments, when sprayed on straw or mulch, are considered visible pollutants and are not subject to water quality monitoring requirements.

- Storm water runoff from an area contaminated by historical usage of the site is observed to combine with storm water, and there is the potential for discharge of pollutants to surface waters or drainage system.

- Storm water run-on to the project site with the potential to contribute non-visible pollutants to discharges from the project.

- Breaches, malfunctions, leakages, or spills from a BMP

EXAMPLE:

The following construction materials, wastes, or activities, as identified in Section 500.3.1, are potential sources of non-visible pollutants to storm water discharges from the project. Storage, use, and operational locations are shown on the WPCDs in Attachment B.

- Solvents, thinners
- Concrete curing
- Treated wood
- Soil stabilizers
- Lime treated subgrade
- Fertilizers, herbicides, and pesticides

The following existing site features, as identified in Section 500.3.3, are potential sources of non-visible pollutants to storm water discharges from the project. Locations of existing site features contaminated with non-visible pollutants are shown on the WPCDs in Attachment B.

- Southwest portion of the construction site was previously used as a municipal landfill until 1987 and may have volatile organics in the soil.
- North portion of the construction site was a storage area for a metal plating shop until 1960 and may have metals in the soil.

The following soil amendments have the potential to change the chemical properties, engineering properties, or erosion resistance of the soil and will be used on the project site. Locations of soil amendment application are shown on the WPCDs in Attachment B.

- None

The project has the potential to receive storm water run-on with the potential to contribute non-visible pollutants to storm water discharges from the project. Locations of such run-on to the project site are shown on the WPCDs in Attachment B.

- One location downgradient of the Millenium Chemical Company chemical plant and the Progress Industrial Park is identified as a run-on location to the construction site.
- Two locations are identified as run-on locations along the eastern edge of the construction site boundary.
- The northern boundary of the construction site has one location where run-on is likely.

REQUIRED TEXT:

The following construction materials, wastes or activities, as identified in Section 500.3.1, are potential sources of non-visible pollutants to storm water discharges from the project. Storage, use, and operational locations are shown on the WPCDs in Attachment B.

- LIST
-
-

The following existing site features, as identified in Section 500.3.3, are potential sources of non-visible pollutants to storm water discharges from the project. Locations of existing site features contaminated with non-visible pollutants are shown on the WPCDs in Attachment B.

- (DESCRIBE)
-
-

The following soil amendments have the potential to change the chemical properties, engineering properties, or erosion resistance of the soil and will be used on the project site. Locations of soil amendment application are shown on the WPCDs in Attachment B.

- (LIST)
-
-

The project has the potential to receive storm water run-on with the potential to contribute non-visible pollutants to storm water discharges from the project. Locations of such run-on to the project site are shown on the WPCDs in Attachment B.

- (LIST LOCATIONS)
-
-

Sampling for non-visible pollutants will be conducted when (1) a breach, leakage, malfunction, or spill is observed; and (2) the leak or spill has not been cleaned up prior to the rain event; and (3) there is the potential for discharge of non-visible pollutants to surface waters or drainage system.

600.5.2 Monitoring Strategy

INSTRUCTIONS:

- ❑ Describe the sampling schedule for monitoring potential non-visible pollutants in storm water runoff. Note the specific conditions under which a sampling event for non-visible pollutants is triggered.
- ❑ Describe the sampling locations for monitoring non-visible pollutants.
- ❑ Describe the rationale for the selection of sampling locations.
- ❑ Identify a location for collecting samples of storm water runoff from each source location of non-visible pollutant identified in Section 600.5.1. Describe exactly where the sample will be collected.
- ❑ Identify a location for collecting an uncontaminated background sample of runoff that has not come into contact with the non-visible pollutants identified in Section 600.5.1 or disturbed soil areas of the project. Describe exactly where the sample will be collected.
- ❑ Identify a location for collecting samples of storm water run-on from each of the locations identified in Section 600.5.1 to identify possible sources of contamination that may originate from off the project site. Describe exactly where the sample will be collected.
- ❑ Identify sampling locations at off-site activities directly related to the project such as storage areas, Contractor's yard, PCC or asphalt batch plants, etc., whether or not it is located within the project site.
- ❑ Show all sampling locations on the WPCDs.
- ❑ Locate sampling locations in areas that are safe, out of the path of heavy traffic, and have attainable access.
- ❑ Describe or list surrounding areas, such as industrial sites, that may contribute run-on or airborne constituents to the site.

- ❑ If no inspections of the site are performed prior to or during a rain event, monitoring and sampling of all non-visible pollutants is required.

REQUIRED TEXT:

Sampling Schedule

Samples for the applicable non-visible pollutant(s) and a sufficiently large uncontaminated background sample shall be collected during the first two hours of discharge from rain events that result in a sufficient discharge for sample collection. Samples shall be collected during daylight hours (sunrise to sunset) and shall be collected regardless of the time of year, status of the construction site, or day of the week.

In conformance with the U.S. Environmental Protection Agency definition, a minimum of 72 hours of dry weather will be used to distinguish between separate rain events.

Collection of discharge samples for non-visible pollutant monitoring will be triggered when any of the following conditions are observed during the required inspections conducted before or during rain events:

- Materials or wastes containing potential non-visible pollutants are not stored under watertight conditions. Watertight conditions are defined as (1) storage in a watertight container, (2) storage under a watertight roof or within a building, or (3) protected by temporary cover and containment that prevents storm water contact and runoff from the storage area.

- Materials or wastes containing potential non-visible pollutants are stored under watertight conditions, but (1) a breach, malfunction, leakage, or spill is observed, (2) the leak or spill is not cleaned up prior to the rain event, and (3) there is the potential for discharge of non-visible pollutants to surface waters or a storm sewer system.

- An operational activity, including but not limited to those in Section 600.5.1, with the potential to contribute non-visible pollutants (1) was occurring during or within 24 hours prior to the rain event, (2) applicable BMPs were observed to be breached, malfunctioning, or improperly implemented, and (3) there is the potential for discharge of non-visible pollutants to surface waters or a storm sewer system.

- Soil amendments that have the potential to change the chemical properties, engineering properties, or erosion resistance of the soil have been applied, and there is the potential for discharge of non-visible pollutants to surface waters or a storm sewer system.

- Storm water runoff from an area contaminated by historical usage of the site has been observed to combine with storm water runoff from the site, and there is the potential for discharge of non-visible pollutants to surface waters or a storm sewer system.

Sampling Locations

Sampling locations are based on proximity to planned non-visible pollutant storage, occurrence or use; accessibility for sampling, personnel safety; and other factors in accordance with the applicable requirements in the Permit. Planned sampling locations are shown on the WPCDs in Attachment B and include the following:

If the following is not "applicable", place cursor in a field and use the "Delete Line" option on the toolbar.

- [Enter number of locations] sampling locations have been identified for the collection of samples of runoff that drain areas where soil amendments that have the potential to change the chemical properties, engineering properties, or erosion resistance of the soil will be applied.
- If applicable Sample location number(s) is located .
- [Enter number of locations] sampling locations have been identified for the collection of samples of runoff that drain areas contaminated by historical usage of the site.
- If applicable Sample location number(s) is located .
- [Enter number of locations] sampling locations have been identified for the collection of samples of run-on to the project site with the potential to combine with discharges being sampled for non-visible pollutants. These samples are intended to identify sources of potential non-visible pollutants that originate off the project site.
- If applicable Sample location number(s) is located .
- A location has been identified for the collection of an uncontaminated sample of runoff as a background sample for comparison with the samples being analyzed for non-visible pollutants. This location was selected such that the sample will not have come in contact with (1) operational or storage areas associated with the materials, wastes, and activities identified in Section 500.3.1; (2) potential non-visible pollutants due to historical use of the site as identified in Section 500.3.3; (3) areas in which soil amendments that have the potential to change the chemical properties, engineering properties, or erosion resistance of the soil have been applied; or (4) disturbed soils areas.
- If applicable Sample location number(s) is located .

If an operational activity or storm water inspection conducted 24 hours prior to or during a rain event identifies the presence of a material storage, waste storage, or operations area with spills or the potential for the discharge of non-visible pollutants to surface waters or a

storm sewer system that was an unplanned location and has not been identified on the WPCDs, sampling locations will be selected using the same rationale as that used to identify planned locations.

600.5.3 Monitoring Preparation

INSTRUCTIONS:

- ❑ Identify whether samples will be collected by the Contractor's personnel, or by a commercial laboratory, or by an environmental consultant.
- ❑ Identify training and experience of individuals responsible for collecting water samples.
- ❑ Identify the Contractor's health and safety procedures for sampling personnel.
- ❑ Identify alternate sampling personnel in case of emergency, sick leave, and/or vacations during storm water monitoring. Identify training of alternate sampling personnel.
- ❑ Identify the state-certified laboratory(ies) that will analyze the samples. For a list of California state-certified laboratories, access the following website: http://www.dhs.ca.gov/ps/ls/elap/html/lablist_county.htm.
- ❑ Include the appropriate required text to describe the strategy for ensuring that adequate sample collection supplies are available to the project in preparation for a sampling event.
- ❑ Describe the strategy for ensuring that appropriate field-tesing equipment is available to the project in preparation for a sampling event. If equipment is to be rented, contact a local environmental equipment rental company, such as www.totalsafetyinc.com.

REQUIRED TEXT if Contractor personnel will collect samples: Select Yes/No

Samples on the project site will be collected by the following Contractor sampling personnel:

Name/Telephone Number:

Name/Telephone Number:
Alternate(s)/Telephone Number:
Alternate(s)/Telephone Number:

Prior to the rainy season, all sampling personnel and alternates will review the SAP. Qualifications of designated Contractor personnel describing environmental sampling training and experience are provided in Attachment I.

An adequate stock of monitoring supplies and equipment for monitoring non-visible pollutants will be available on the project site prior to a sampling event. Monitoring supplies and equipment will be stored in a cool-temperature environment that will not come into contact with rain or direct sunlight. Sampling personnel will be available to collect samples in accordance with the sampling schedule. Supplies maintained at the project site will include, but are not limited to, surgical gloves, sample collection equipment, coolers, appropriate number and volume of sample bottles, identification labels, re-sealable storage bags, paper towels, personal rain gear, ice, Sampling Activity Log forms, and Chain of Custody (COC) forms.

The Contractor will obtain and maintain the field-testing instruments, as identified in Section 600.5.6, for analyzing samples in the field by Contractor sampling personnel.

Safety practices for sample collection will be in accordance with the [ENTER TITLE AND PUBLICATION DATE OF CONTRACTOR'S HEALTH AND SAFETY PLAN FOR THE PROJECT OR PROVIDE SPECIFIC REQUIREMENTS HEREIN].

REQUIRED TEXT if consultant or laboratory will collect samples:

Samples on the project site will be collected by the following [specify laboratory or environmental consultant]:

Company Name:

Address:

Telephone Number:

Point of Contact:

Qualifications of designated Contractor personnel describing environmental sampling training and experience are provided in Attachment I.

SWPPM will contact [specify name of laboratory or environmental consultant] [enter number of hours] hours prior to a predicted rain event and if one of the triggering conditions is identified during an inspection before, during, or after a storm event to ensure that adequate sample collection personnel, supplies and field test equipment for

monitoring non-visible pollutants are available and will be mobilized to collect samples on the project site in accordance with the sampling schedule.

[Specify name of laboratory or environmental consultant] will obtain and maintain the field-testing instruments, as identified in Section 600.5.6, for analyzing samples in the field by their sampling personnel.

600.5.4 Analytical Constituents

INSTRUCTIONS:

- ❑ Identify the specific non-visible pollutants on the project site by completing Table 600-2, "Potential Non-Visible Pollutants and Water Quality Indicator Constituents".
- ❑ List the non-visible pollutant source, non-visible pollutant name, and water quality indicator.
- ❑ Refer to the "Construction Material and Pollutant Testing Guidance Table - Non-Visible Pollutants" in Attachment S for a partial list of some of the common non-visible pollutants.
- ❑ Add lines to the table as needed.

■ Do not include visible pollutants such as:

- Petroleum products: gas, diesel, and lubricants
- Colored paints
- Sand, gravel or topsoil
- Asphalt cold mix

- ❑ Fill in Table 600-3, Sample Collection, Preservation and Analysis for Monitoring Non-Visible Pollutants.

REQUIRED TEXT:

Identification of Non-Visible Pollutants

Table 600-2 lists the specific sources and types of potential non-visible pollutants on the project site and the applicable water quality indicator constituent(s) for that pollutant.

Table 600-2

Potential Non-Visible Pollutants and Water Quality Indicator Constituents

	Pollutant Source	Pollutant	Water Quality Indicator Constituent
Example:	Vehicle batteries	Lead, Sulfate or pH	Lead, sulfate or pH

600.5.5 Sample Collection and Handling

INSTRUCTIONS:

- For laboratory analysis, all sampling, sample preservation, and analyses must be conducted according to test procedures under 40 CFR Part 136.
- For a the list of California state-certified laboratories, access the following web site: www.dhs.ca.gov/ps/ls/elap/html/lablist_county.htm
- A Chain of Custody (COC) form is required to be submitted to the laboratory with the samples to trace the possession and handling of samples from collection through analysis.
- A Sampling Activity Log is required to document details of all sampling events and to record results for samples analyzed in the field.
- Each sample bottle is required to have a proper and complete identification label.
- Run-on samples could be collected using the following collection procedures:
    - Place several rows of sandbags in a half circle directly in the path of the run-on to pond water and wait for enough water to spill over. Then place a decontaminated or clean flexible hose along the top and cover with another sandbag so that ponded water will only pour through the flexible hose and into sample bottles. Do not reuse the same sandbags in future sampling events as they may cross-contaminate future samples.
    - Place a decontaminated or clean dustpan with open handle in the path of the run-on so that water will pour through the handle and into sample bottles.
    - If not using clean equipment, decontaminate by washing equipment in a TSP-soapy water wash, distilled water rinse, and final rinse with distilled water.

- ❑ Describe sample collection procedures to be used on the project site.
- ❑ Describe sample-handling procedures.
- ❑ Describe decontamination waste disposal requirements (i.e., TSP soapy water shall not be discharged to the storm drainage system or receiving water)
- ❑ Describe sample collection documentation procedures.
- ❑ Describe procedures for recording and correcting sampling data.
- ❑ Fill in Table 600-3, Sample Collection, Preservation and Analysis for Monitoring Non-Visible Pollutants, in Section 600.5.6.

REQUIRED TEXT:

Sample Collection Procedures

Samples of discharge will be collected at the designated sampling locations shown on the WPCDs for observed breaches, malfunctions, leakages, spills, operational areas, soil amendment application areas, and historical site usage areas that triggered the sampling event.

Grab samples will be collected and preserved in accordance with the methods identified in the Table 600-3, "Sample Collection, Preservation and Analysis for Monitoring Non-Visible Pollutants," provided in Section 600.5.6. Only personnel trained in proper water quality sampling will collect samples.

Samples will be collected by placing a separate lab-provided sample container directly into a stream of water downgradient and within close proximity to the potential non-visible pollutant discharge location. This separate lab-provided sample container will be used to collect water, which will be transferred to sample bottles for laboratory analysis. The upgradient and uncontaminated background samples shall be collected first prior to collecting the downgradient to minimize cross-contamination. The sampling personnel will collect the water upgradient of where they are standing. Once the separate lab-provided sample container is filled, the water sample will be poured directly into sample bottles provided by the laboratory for the analyte(s) being monitored.

To maintain sample integrity and prevent cross-contamination, sampling collection personnel will:

- Wear a clean pair of surgical gloves prior to the collection and handling of each sample at each location.
- Not contaminate the inside of the sample bottle by not allowing it to come into contact with any material other than the water sample.
- Discard sample bottles or sample lids that have been dropped onto the ground prior to sample collection.
- Not leave the cooler lid open for an extended period of time once samples are placed inside.
- Not sample near a running vehicle where exhaust fumes may impact the sample.
- Not touch the exposed end of a sampling tube, if applicable.
- Avoid allowing rainwater to drip from rain gear or other surfaces into sample bottles.
- Not eat, smoke, or drink during sample collection.
- Not sneeze or cough in the direction of an open sample bottle.
- Minimize the exposure of the samples to direct sunlight, as sunlight may cause biochemical transformation of the sample to take place.
- Decontaminate sampling equipment prior to sample collection using a TSP-soapy water wash, distilled water rinse, and final rinse with distilled water.
- Dispose of decontamination water/soaps appropriately; i.e., not discharge to the storm drain system or receiving water.

Sample Handling Procedures

REQUIRED TEXT only if a laboratory will analyze ALL OR SOME OF THE samples: Select Yes/No

Immediately following collection, sample bottles for laboratory analytical testing will be capped, labeled, documented on a Chain of Custody form provided by the analytical laboratory, sealed in a re-sealable storage bag, placed in an ice-chilled cooler, at as near to 4 degrees Celsius as practicable, and delivered within 24 hours to the following California state-certified laboratory:

Laboratory Name:

Address:

Telephone Number:

Point of Contact:

REQUIRED TEXT only If Contractor will analyze ALL OR SOME samples:

Immediately following collection, samples for field analysis will be tested in accordance with the field instrument manufacturer's instructions and results recorded on the Sampling Activity Log.

REQUIRED TEXT:

Sample Documentation Procedures

All original data documented on sample bottle identification labels, Chain of Custody forms, Sampling Activity Logs, and Inspection Checklists will be recorded using waterproof ink. These will be considered accountable documents. If an error is made on an accountable document, the individual will make corrections by lining through the error and entering the correct information. The erroneous information will not be obliterated. All corrections will be initialed and dated. Copies of the Sampling Activity Log and Chain of Custody form are provided in Attachment R.

Sampling and field analysis activities will be documented using the following:

- Sample Bottle Identification Labels: Sampling personnel will attach an identification label to each sample bottle. At a minimum, the following information will be recorded on the label, as appropriate:

  - Project name
  - Project number
  - Unique sample identification number and location.
    [Project Number]-[Six digit sample collection date]-[Location]
    (*Example:* 0G5304-081801-Inlet472).
    Quality assurance/quality control (QA/QC) samples shall be identified similarly using a unique sample number or designation
    (*Example:* 0G5304-081801-DUP1).
    - Collection date/time (No time applied to QA/QC samples
    - Analysis constituent

- Sampling Activity Logs: A log of sampling events will identify:

  - Sampling date
  - Separate times for collected samples and QA/QC samples recorded to the nearest minute
  - Unique sample identification number and location
  - Analysis constituent
  - Names of sampling personnel
  - Weather conditions (including precipitation amount)
  - Field analysis results
  - Other pertinent data

- Chain of Custody (COC) forms: All samples to be analyzed by a laboratory will be accompanied by a COC form provided by the laboratory. Only the sample collectors will sign the COC form over to the lab. COC procedures will be strictly adhered to for QA/QC purposes.

- Storm Water Quality Construction Inspection Checklists: When applicable, the Contractor's storm water inspector will document on the checklist that samples for non-visible pollutants were taken during a rain event.

600.5.6 Sample Analysis

INSTRUCTIONS:

- ❑ Identify the test method and specifications to be used to monitor the non-visible pollutants included in Table 600-2, "Potential Non-Visible Pollutants and Water Quality Indicator Constituents" in Section 600.5.4.
- ❑ Fill-in Table 600-3, "Sample Collection, Preservation and Analysis for Monitoring Non-Visible Pollutants".
- ❑ There should be a test method identified for each Water Quality Indicator Constituent listed in Table 600-2 in Section 600.5.4.
- ❑ Contact the selected laboratory for the appropriate test method(s)/specifications to be used for each constituent.
- ❑ Identify field test instruments to be used for analyzing samples in the field, if any.

REQUIRED TEXT:

Samples will be analyzed for the applicable constituents using the analytical methods identified in Table 600-3, "Sample Collection, Preservation and Analysis for Monitoring Non-Visible Pollutants" in this section.

Example:

Table 600-3 (Sample)
Sample Collection, Preservation and Analysis for Monitoring Non-Visible Pollutants

Constituent	Analytical Method	Minimum Sample Volume	Sample Bottle	Sample Preservation	Reporting Limit	Maximum Holding Time
VOCs-Solvents	EPA 8260B	3 x 40 mL	VOA-glass	Store at 4˚ C, HCl to pH<2	1 µg/L	14 days
SVOCs	EPA 8270C	1 x 1 L	Glass-Amber	Store at 4˚ C	10 µg/L	7 days
Pesticides/PCBs	EPA 8081A/8082	1 x 1 L	Glass-Amber	Store at 4˚ C	0.1 µg/L	7 days
Herbicides	EPA 8151A	1 x 1 L	Glass-Amber	Store at 4˚ C	Check Lab	7 days
BOD	EPA 405.1	1 x 500 mL	Polypropylene	Store at 4˚ C	1 mg/L	48 hours
COD	EPA 410.4	1 x 250 mL	Glass-Amber	Store at 4˚ C, H_2SO_4 to pH<2	5 mg/L	28 days
DO	SM 4500-O G	1 x 250 mL	Glass-Amber	Store at 4˚ C	Check Lab	8 hours
pH	EPA 150.1	1 x 100 mL	Polypropylene	None	Unitless	Immediate
Alkalinity	SM 2320B	1 x 250 mL	Polypropylene	Store at 4˚ C	1 mg/L	14 days
Metals (Al, Sb, As, Ba, Be, Cd, Ca, Cr, Co, Cu, Fe, Pb, Mg, Mn, Mo, Ni, Se, Na, Th, Va, Zn)	EPA 6010B/7470A	1 x 250 mL	Polypropylene	Store at 4˚ C, HNO_3 to pH<2	0.1 mg/L	6 months
Metals (Chromium VI)	EPA 7199	1 x 500 mL	Polypropylene	Store at 4˚ C	1 µg/L	24 hours

Notes:
- °C – Degrees Celsius
- BOD – Biological Oxygen Demand
- COD – Chemical Oxygen Demand
- DO – Dissolved Oxygen
- EPA – Environmental Protection Agency
- HCl – Hydrogen Chloride
- H_2SO_4 – Hydrogen Sulfide
- HNO_3 – Nitric Acid
- L – Liter
- mg/L – Milligrams per Liter
- µg/L – Micrograms per Liter
- mL – Milliliter
- PCB – Polychlorinated Biphenyl
- SVOC – Semi-Volatile Organic Compound
- SM – Standard Method
- TPH – Total Petroleum Hydrocarbons
- TRPH – Total Recoverable Petroleum Hydrocarbons
- VOA – Volatile Organic Analysis
- VOC – Volatile Organic Compound

REQUIRED TEXT:

Table 600-3
Sample Collection, Preservation and Analysis for Monitoring Non-Visible Pollutants

Constituent	Analytical Method	Minimum Sample Volume	Sample Bottle	Sample Preservation	Reporting Limit	Maximum Holding Time
Notes:						

REQUIRED TEXT only If samples will be analyzed in the field: Select Yes/No

For samples collected for field analysis, collection, analysis and equipment calibration will be in accordance with the field instrument manufacturer's specifications.

The following field instrument(s) will be used to analyzed the following constituents:

Field Instrument	Constituent

- The instrument(s) will be maintained in accordance with manufacturer's instructions.
- The instrument(s) will be calibrated before each sampling and analysis event.
- Maintenance and calibration records will be maintained with the SWPPP.

600.5. 7 Quality Assurance/Quality Control

REQUIRED TEXT:

For an initial verification of laboratory or field analysis, duplicate samples will be collected at a rate of 10 percent or 1 duplicate per sampling event. The duplicate sample will be collected, handled, and analyzed using the same protocols as primary samples. A duplicate sample will be collected at each location immediately after the primary sample has been collected. Duplicates will be collected where contamination is likely, not on the background sample. Duplicate samples will not influence any evaluations or conclusions; however, they will be used as a check on laboratory quality assurance.

600.5.8 Data Management and Reporting

REQUIRED TEXT:

A copy of all water quality analytical results and QA/QC data will be submitted to the Owner/Developer within 5 days of sampling (for field analyses) and within 30 days (for laboratory analyses).

Lab reports and COCs will be reviewed for consistency between lab methods, sample identifications, dates, and times for both primary samples and QA/QC samples. All data, including COC forms and Sampling Activity Logs, shall be kept with the SWPPP.

600.5.9 Data Evaluation

INSTRUCTIONS:

- The General Permit requires that BMPs be implemented on the construction site to reduce non-visible pollutants in discharges of storm water from the construction site.
- The runoff/downgradient water quality sample analytical results will be evaluated to determine if the runoff/downgradient sample(s) show significantly elevated concentrations of the tested analyte relative to the concentrations found in the uncontaminated background sample.
- The water quality sample analytical results will be evaluated to determine if the runoff and run-on samples show significantly elevated levels of the tested constituent relative to the levels found in the background sample. The run-on sample analytical results will be used as an aid in evaluating potential offsite influences on water quality results.

REQUIRED TEXT:

An evaluation of the water quality sample analytical results, including figures with sample locations, will be submitted to the Owner/Developer with the water quality analytical results and the QA/QC data.

Should the runoff/downgradient sample show an increased level of the tested analyte relative to the background sample, the BMPs, site conditions, and surrounding influences will be assessed to determine the probable cause for the increase. As determined by the site and data evaluation, appropriate BMPs will be repaired or modified to mitigate discharges of non-visual pollutant concentrations. Any revisions to the BMPs will be recorded as an amendment to the SWPPP.

600.5.10 Change of Conditions

REQUIRED TEXT:

Whenever SWPPP monitoring, pursuant to Section B of the General Permit, indicates a change in site conditions that might affect the appropriateness of sampling locations or introduce additional non-visible pollutants of concern, testing protocols will be revised accordingly. All such revisions will be recorded as amendments to the SWPPP.

Attachment A
Vicinity Map

Attachment B

Water Pollution Control Drawings (WPCDs)

INSTRUCTIONS

- Insert the Water Pollution Control Drawings following this page.

Attachment C

BMP Consideration Checklist

CONSTRUCTION SITE BMPs CONSIDERATION CHECKLIST					
The BMPs listed here should be considered for every project. Those BMPs that are not included in the SWPPP must be checked as "Not Used" with a brief statement describing why it is not being used.					
EROSION CONTROL BMPs					
BMP No.	**BMP**	**CONSIDERED FOR PROJECT**	**CHECK IF USED**	**CHECK IF NOT USED**	**IF NOT USED, STATE REASON**
ES-1	Scheduling				
ES-2	Preservation of Existing Vegetation				
ES-3	Hydraulic Mulch				
ES-4	Hydroseeding				
ES-5	Soil Binders				
ES-6	Straw Mulch				
ES-7	Geotextiles & Mats				
ES-8	Wood Mulching				
ES-9	Earth Dikes & Drainage Swales				
ES-10	Velocity Dissipation Devices				
ES-11	Slope Drains				

CONSTRUCTION SITE BMPs
CONSIDERATION CHECKLIST

The BMPs listed here should be considered for every project. Those BMPs that are not included in the SWPPP must be checked as "Not Used" with a brief statement describing why it is not being used.

BMP No.	BMP	CONSIDERED FOR PROJECT	CHECK IF USED	CHECK IF NOT USED	IF NOT USED, STATE REASON
SEDIMENT CONTROL BMPs					
SC-1	Silt Fence				
SC-2	Sediment Basin				
SC-3	Sediment Trap				
SC-4	Check Dam				
SC-5	Fiber Rolls				
SC-6	Gravel Bag Berm				
SC-7	Street Sweeping and Vacuuming				
SC-8	Sand Bag Barrier				
SC-9	Straw Bale Barrier				
SC-10	Storm Drain Inlet Protection				
WIND EROSION CONTROL BMPs					
WE-1	Wind Erosion Control				
TRACKING CONTROL BMPs					
TC-1	Stabilized Construction Entrance/Exit				
TC-2	Stabilized Construction Roadway				
TC-3	Entrance/Outlet Tire Wash				

CONSTRUCTION SITE BMPs
CONSIDERATION CHECKLIST

The BMPs listed here should be considered for every project. Those BMPs that are not included in the SWPPP must be checked as "Not Used" with a brief statement describing why it is not being used.

NON-STORM WATER MANAGEMENT BMPs

BMP No.	BMP	CONSIDERED FOR PROJECT	CHECK IF USED	CHECK IF NOT USED	IF NOT USED, STATE REASON
NS-1	Water Conservation Practices				
NS-2	Dewatering Operations				
NS-3	Paving and Grinding Operations				
NS-4	Temporary Stream Crossing				
NS-5	Clear Water Diversion				
NS-6	Illicit Connection/ Discharge				
NS-7	Potable Water/Irrigation				
NS-8	Vehicle and Equipment Cleaning				
NS-9	Vehicle and Equipment Fueling				
NS-10	Vehicle and Equipment Maintenance				
NS-11	Pile Driving Operations				
NS-12	Concrete Curing				
NS-13	Concrete Finishing				
NS-14	Material and Equipment Use Over Water				
NS-15	Demolition Adjacent to Water				
NS-16	Temporary Batch Plants				

CONSTRUCTION SITE BMPs
CONSIDERATION CHECKLIST

The BMPs listed here should be considered for every project. Those BMPs that are not included in the SWPPP must be checked as "Not Used" with a brief statement describing why it is not being used.

WASTE MANAGEMENT AND MATERIALS POLLUTION CONTROL BMPs

BMP No.	BMP	CONSIDERED FOR PROJECT	CHECK IF USED	CHECK IF NOT USED	IF NOT USED, STATE REASON
WM-1	Material Delivery and Storage				
WM-2	Material Use				
WM-3	Stockpile Management				
WM-4	Spill Prevention and Control				
WM-5	Solid Waste Management				
WM-6	Hazardous Waste Management				
WM-7	Contaminated Soil Management				
WM-8	Concrete Waste Management				
WM-9	Sanitary/Septic Waste Management				
WM-10	Liquid Waste Management				

Attachment D

Computation Sheet for Determining Runoff Coefficients

INSTRUCTIONS

- The runoff coefficient ("C" value) is used to estimate the impact on stormwater runoff due to development of a site. The C value is the amount of rainfall that becomes runoff. The less runoff that is absorbed into the ground, the higher the C value.
- Refer to the local Hydrology Manual for requirements for calculating weighted runoff coefficients for areas containing varying amounts of different cover.
- Refer to the local Hydrology Manual for information of Runoff Coefficients for Undeveloped Areas and Runoff Coefficients for Developed Areas.

EXAMPLE

Total Site Area	=	120 Acres	(A)
Existing Site Conditions			
Impervious Area[1]	=	20 Acres	(B)
Impervious Area Runoff Coefficient [2]	=	0.90	(C)
20 x 0.90	=	18 Acres	(B x C)
Pervious Area[3]	=	102 Acres	(D)
Pervious Area Runoff Coefficient	=	0.4	(E)
104 x 0.4	=	41.6 Acres	(D x E)
Sum: 18 + 41.6	=	59.6	(B x C) + (D x E)
Divide: 59.6/120	=	0.50	
Existing Area Runoff Coefficient	=	0.50	(F)

Proposed Site Conditions

Impervious Area[1]		=	100 Acres	(G)
Impervious Area Runoff Coefficient[2]		=	0.95	(H)
	100 x 0.95	=	95 Acres	(G x H)
Pervious Area		=	20 Acres	(I)
Pervious Area Runoff Coefficient		=	0.4	(J)
	20 x 0.4	=	8 Acres	(I x J)
Sum:	95 + 8	=	103	(G x H) + (I x J)
Divide:	103/120	=	0.86	
Existing Area Runoff Coefficient		=	0.86	(F)

REQUIRED TEXT:

Total Site Area = _____ Acres (A)

Existing Site Conditions

Impervious Site Area [1] = _____ Acres (B)

Impervious Site Area Runoff Coefficient [2, 4] = _____ (C)

Pervious Site Area [3] = _____ Acres (D)

Pervious Site Area Runoff Coefficient [4] = _____ (E)

Existing Site Area Runoff Coefficient $\frac{(B \times C) + (D \times E)}{(A)}$ = _____ (F)

Proposed Site Conditions (after construction)

Impervious Site Area [1] = _____ Acres (G)

Impervious Site Area Runoff Coefficient [2, 4] = _____ (H)

Pervious Site Area [3] = _____ Acres (I)

Pervious Site Area Runoff Coefficient [4] = _____ (J)

Proposed Site Area Runoff Coefficient $\frac{(G \times H) + (I \times J)}{(A)}$ = _____ (K)

1. Includes paved areas, areas covered by buildings, and other impervious surfaces.
2. Use 0.95 unless lower or higher runoff coefficient can be verified.
3. Includes areas of vegetation, most unpaved or uncovered soil surfaces, and other pervious areas.
4. Refer to local Hydrology Manual for typical C values.

Attachment E

Computational Sheet for Determining Run-on Discharges

INSTRUCTIONS

- ***Item A***. The runoff coefficient represents the percent of water, which will run off the ground surface during the storm. Values of the Runoff Coefficients for Undeveloped Areas and Runoff Coefficients for Developed Areas can be determined from the local Hydrology Manual.
- Refer to the local Hydrology Manual for requirements for calculating weighted runoff coefficients for areas containing varying amounts of different cover.
- ***Item B***. Rainfall intensity, in inches per hour, is the average rainfall intensity for the selected frequency. Refer to the local Hydrology Manual, County Flood Control, or U. S. Army Corps of Engineers manuals for rainfall intensity values.
- ***Item C***. Drainage area in Acres includes impervious and pervious areas and surfaces covered by buildings.
- SWPPP preparer shall provide calculations for offsite run-on if flow quantities are not available via the project design documents (Drainage Report, Hydrology Report, etc.)
- The rational method should not be used for drainage areas greater than 300Acres. Check with the local Hydrology Manual for calculation requirements.

Existing Site Conditions

Area Runoff Coefficient		=	_____	(A)
Area Rainfall Intensity		=	_____ in/hr	(B)
Drainage Area		=	_____ Acres	(C)
Site Area Run-on Discharge	(A) x (B) x (C)	=	_____ ft^3/sec	(D)

Attachment F

Notice of Intent (NOI)

INSTRUCTIONS

- The NOI form shown in the following page is a blank form.

State Water Resources Control Board

NOTICE OF INTENT

TO COMPLY WITH THE TERMS OF THE
GENERAL PERMIT TO DISCHARGE STORM WATER
ASSOCIATED WITH CONSTRUCTION ACTIVITY (WQ ORDER No. 99-08-DWQ)

I. NOI STATUS (SEE INSTRUCTIONS)

MARK ONLY ONE ITEM 1. ☐ New Construction 2. ☐ Change of Information for WDID#

II. PROPERTY OWNER

Name	Contact Person		
Mailing Address	Title		
City	State	Zip	Phone ( ) --

III. DEVELOPER/CONTRACTOR INFORMATION

Developer/Contractor	Contact Person		
Mailing Address	Title		
City	State	Zip	Phone ( ) --

IV. CONSTRUCTION PROJECT INFORMATION

Site/Project Name	Site Contact Person		
Physical Address/Location	Latitude _____°	Longitude _____°	County
City (or nearest City)	Zip	Site Phone Number ( ) --	Emergency Phone Number ( ) --

A. Total size of construction site area: _____ Acres B. Total area to be disturbed: _____ Acres (% of total _____)	C. Percent of site imperviousness (including rooftops): Before Construction: _____% After Construction: _____%	D. Tract Number(s): _____, _____ E. Mile Post Marker: _____

F. Is the construction site part of a larger common plan of development or sale? ☐ YES ☐ NO	G. Name of plan or development:
H. Construction commencement date: _____/_____/_____ I. % of site to be mass graded: _____	J. Projected construction dates: Complete grading: _____/_____/_____ Complete project: _____/_____/_____

K. Type of Construction (Check all that apply):

1. ☐ Residential 2. ☐ Commercial 3. ☐ Industrial 4. ☐ Reconstruction 5. ☐ Transportation

6. ☐ Utility Description: _____ 7. ☐ Other (Please List): _____

V. BILLING INFORMATION

SEND BILL TO: ☐ OWNER (as in II. above)	Name	Contact Person	
☐ DEVELOPER (as in III. above)	Mailing Address	Phone/Fax	
☐ OTHER (enter information at right)	City	State	Zip

VI. REGULATORY STATUS

A. Has a local agency approved a required erosion/sediment control plan?..... ☐ YES ☐ NO

Does the erosion/sediment control plan address construction activities such as infrastructure and structures?..... ☐ YES ☐ NO

Name of local agency: _____ Phone: ( ) --

B. Is this project or any part thereof, subject to conditions imposed under a CWA Section 404 permit of 401 Water Quality Certification?..... ☐ YES ☐ NO

If yes, provide details: _____

VII. RECEIVING WATER INFORMATION

A. Does the storm water runoff from the construction site discharge to (Check all that apply):

1. ☐ **Indirectly to waters of the U.S.**
2. ☐ **Storm drain system - Enter owner's name: _____**
3. ☐ **Directly to waters of U.S. (e.g., river, lake, creek, stream, bay, ocean, etc.)**

B. Name of receiving water: (river, lake, creek, stream, bay, ocean): _____

VIII. IMPLEMENTATION OF NPDES PERMIT REQUIREMENTS

A. STORM WATER POLLUTION PREVENTION PLAN (SWPPP) (check one)

☐ A SWPPP has been prepared for this facility and is available for review: Date Prepared: ____/____/____ Date Amended: ____/____/____

☐ A SWPPP will be prepared and ready for review by (enter date): ____/____/____

☐ A tentative schedule has been included in the SWPPP for activities such as grading, street construction, home construction, etc.

B. MONITORING PROGRAM

☐ A monitoring and maintenance schedule has been developed that includes inspection of the construction BMPs before anticipated storm events and after actual storm events and is available for review.

If checked above: A qualified person has been assigned responsibility for pre-storm and post-storm BMP inspections to identify effectiveness and necessary repairs or design changes..... ☐ YES ☐ NO

Name: _____ Phone: ( )

C. PERMIT COMPLIANCE RESPONSIBILITY

A qualified person has been assigned responsibility to ensure full compliance with the Permit, and to implement all elements of the Storm Water Pollution Prevention Plan including:

1. Preparing an annual compliance evaluation..... ☐ YES ☐ NO

   Name: _____ Phone: ( ) --

2. Eliminating all unauthorized discharges..... ☐ YES ☐ NO

IX. VICINITY MAP AND FEE (must show site location in relation to nearest named streets, intersections, etc.)

Have you included a vicinity map with this submittal? ..... ☐ YES ☐ NO

Have you included payment of the annual fee with this submittal?..... ☐ YES ☐ NO

X. CERTIFICATIONS

"I certify under penalty of law that this document and all attachments were prepared under my direction and supervision in accordance with a system designed to assure that qualified personnel properly gather and evaluate the information submitted. Based on my inquiry of the person or persons who manage the system, or those persons directly responsible for gathering the information, the information submitted is, to the best of my knowledge and belief, true, accurate, and complete. I am aware that there are significant penalties for submitting false information, including the possibility of fine or imprisonment. In addition, I certify that the provisions of the permit, including the development and implementation of a Storm Water Pollution Prevention Plan and a Monitoring Program Plan will be complied with."

Printed Name: _____

Signature: _____ **Date:** _____

Title: _____

Attachment G

Program for Maintenance, Inspection, and Repair of Construction Site BMPs

INSTRUCTIONS

- Use this form as an outline for the maintenance, inspection and repair program described in SWPPP Section 500.5.
- Certain projects may require increased inspection frequencies.

The contractor shall use the following guidelines for maintenance, inspection, and repair of BMPs identified in the SWPPP		
BEST MANAGEMENT PRACTICES (BMPs)	**INSPECTION FREQUENCY (all controls)**	**MAINTENANCE/REPAIR PROGRAM**
TEMPORARY EROSION CONTROL BMPs		
		■ ■ ■
		■ ■ ■
TEMPORARY SEDIMENT CONTROL BMPs		
		■ ■ ■ ■ ■ ■
		■ ■
		■ ■ ■ ■ ■ ■

The contractor shall use the following guidelines for maintenance, inspection, and repair of BMPs identified in the SWPPP		
BEST MANAGEMENT PRACTICES (BMPs)	**INSPECTION FREQUENCY (all controls)**	**MAINTENANCE/REPAIR PROGRAM**
WIND EROSION CONTROL BMPs		
		■
TRACKING CONTROL BMPs		
		■ ■ ■
NON-STORM WATER MANAGEMENT BMPs		
		■ ■ ■ ■ ■ ■ ■
WASTE MANAGEMENT AND MATERIALS POLLUTION CONTROL BMPs		
		■ ■ ■ ■ ■ ■ ■
		■

Attachment H

Storm Water Quality Construction Site Inspection Checklist

INSTRUCTIONS

- Use this form for inspecting BMPs as described in SWPPP Section 500.5.
- This inspection form shall be completed and signed by the Contractor's Storm Water Pollution Prevention Manager (SWPPM).
- The local agency may require the Contractor to use a different inspection form
- The weather information shall be the best estimate of beginning of the storm event, duration of the event, time elapsed since the last storm, and approximate amount of rainfall.
- List observations of all BMPs: temporary erosion controls, temporary sediment controls, wind erosion controls, tracking controls, non-storm water controls and waste management and materials pollution controls.
- Evaluate BMPs for adequacy and proper implementation and whether additional BMPs are required in accordance with the terms of the Permits.
- Verify implementation of non-storm water discharge BMPs and evaluate their effectiveness.
- One-time discharges of non-storm water shall be inspected when such discharges occur.
- Describe any inadequate BMPs.
- Note the corrective actions required, including any changes to the SWPPP, and implementation dates.
- If you answer "No" to any of the questions, describe the corrective action(s) to be taken and when the corrective action(s) are to be completed. Should you need more space to describe corrective actions, identify your response numerically and use additional sheets as necessary.

GENERAL INFORMATION	
Project Name	
Project N°	
Contractor	
Inspector's Name	

GENERAL INFORMATION				
Inspector's Title				
Signature				
Date of Inspection				
Inspection Type (Check Applicable)	❒ Prior to forecast rain ❒ 24-hr intervals during extended rain		❒ After a rain event ❒ Other _____	
Season (Check Applicable)	❒ Rainy		❒ Non-Rainy	
Storm Data	Storm Start Date & Time:		Storm Duration (hrs):	
	Time elapsed since last storm (Circle Applicable Units)	Min. Hr. Days	Approximate Rainfall Amount (inches)	

PROJECT AREA SUMMARY AND DISTURBED SOIL AREA (DSA) SIZE		
Total Project Area	_____	Acres
Field Estimate of Active DSAs	_____	Acres
Field Estimate of Non-Active DSAs	_____	Acres

INSPECTION OF BMPs				
BMP	**Yes**	**No**	**N/A**	**Corrective Action**
Preservation of Existing Vegetation				
Is temporary fencing provided to preserve vegetation in areas where no construction activity is planned?				
Location:				
Location:				
Location:				
Location:				
Erosion Control				
Does the applied temporary erosion control provide 100% coverage for the affected areas?				
Are any non-vegetated areas that may require temporary erosion control?				
Is the area where erosion controls are used required free from visible erosion?				

INSPECTION OF BMPs				
BMP	**Yes**	**No**	**N/A**	**Corrective Action**
Location:				
Location:				
Location:				
Location:				
Temporary Linear Sediment Barriers (Silt Fence, Fiber Rolls, Sandbag Barriers, etc.)				
Are temporary linear sediment barriers properly installed, functional and maintained?				
Are temporary linear sediment barriers free of accumulated litter?				
Is the built-up sediment less than 1/3 the height of the barrier?				
Are cross barriers installed where necessary and properly spaced?				
Location:				
Location:				
Location:				
Location:				
Location:				
Storm Drain Inlet Protection				
Are storm drain inlets internal to the project properly protected?				
Are storm drain inlet protection devices in working order and being properly maintained?				
Location:				
Location:				
Location:				
Location:				
Location:				
Sediment Basins				
Are basins designed in accordance with the requirements of the General Permit?				
Are basins maintained to provide the required retention/detention?				
Are basin controls (inlets, outlets, diversions, weirs, spillways, and racks) in working order?				
Location:				
Location:				
Location:				
Location:				
Stockpiles				
Are all locations of temporary stockpiles, including soil, hazardous waste, and construction materials in approved areas?				
Are stockpiles protected from run-on, run-off from adjacent areas and from winds?				

INSPECTION OF BMPs				
BMP	**Yes**	**No**	**N/A**	**Corrective Action**
Are stockpiles located at least 15 m from concentrated flows, downstream drainage courses and storm drain inlets?				
Are required covers and/or perimeter controls in place?				
Location:				
Location:				
Location:				
Location:				
Concentrated Flows				
Are concentrated flow paths free of visible erosion?				
Location:				
Location:				
Location:				
Location:				
Tracking Control				
Is the entrance stabilized to prevent tracking				
Is the stabilized entrance inspected daily to ensure that it is working properly				
Are points of ingress/egress to public/private roads inspected and swept and vacuumed as needed?				
Are all paved areas free of visible sediment tracking or other particulate matter?				
Location:				
Location:				
Location:				
Location:				
Wind Erosion Control				
Is dust control implemented?				
Location:				
Location:				
Location:				
Location:				
Dewatering Operations				
Are all one-time dewatering operations covered by the General Permit inspected before and as they occur and BMPs implemented as necessary during discharge?				
Is ground water dewatering handled in conformance with the dewatering permit issued by the RWQCB?				
Is required treatment provided for dewatering effluent?				
Location:				

INSPECTION OF BMPs				
BMP	**Yes**	**No**	**N/A**	**Corrective Action**
Location:				
Location:				
Location:				
Vehicle & Equipment Fueling, Cleaning, and Maintenance				
Are vehicle and equipment fueling, cleaning and maintenance areas reasonably clean and free of spills, leaks, or any other deleterious material?				
Are vehicle and equipment fueling, cleaning and maintenance activities performed on an impermeable surface in dedicated areas?				
If no, are drip pans used?				
Are dedicated fueling, cleaning, and maintenance areas located at least 15 m away from downstream drainage facilities and watercourses and protected from run-on and runoff?				
Is wash water contained for infiltration/ evaporation and disposed of appropriately?				
Is on-site cleaning limited to washing with water (no soap, soaps substitutes, solvents, or steam)?				
On each day of use, are vehicles and equipment inspected for leaks and if necessary, repaired?				
Location:				
Location:				
Location:				
Location:				
Waste Management & Materials Pollution Control				
Are material storage areas and washout areas protected from run-on and runoff, and located at least 15 m from concentrated flows and downstream drainage facilities?				
Are all material handling and storage areas clean; organized; free of spills, leaks, or any other deleterious material; and stocked with appropriate clean-up supplies?				
Are liquid materials, hazardous materials, and hazardous wastes stored in temporary containment facilities?				
Are bagged and boxed materials stored on pallets?				
Are hazardous materials and wastes stored in appropriate, labeled containers?				
Are proper storage, clean-up, and spill-reporting procedures for hazardous materials and wastes posted in open, conspicuous and accessible locations adjacent to storage areas?				
Are temporary containment facilities free of spills and rainwater?				
Are temporary containment facilities and bagged/boxed materials covered?				
Are temporary concrete washout facilities designated and being used?				
Are temporary concrete washout facilities functional for receiving and containing concrete waste and are concrete residues prevented from entering the drainage system?				
Do temporary concrete washout facilities provide sufficient volume and freeboard for planned concrete operations?				

INSPECTION OF BMPs				
BMP	**Yes**	**No**	**N/A**	**Corrective Action**
Are concrete wastes, including residues from cutting and grinding, contained and disposed of off-site or in concrete washout facilities?				
Are spills from mobile equipment fueling and maintenance properly contained and cleaned up?				
Is the site free of litter?				
Are trash receptacles provided in the yard, field trailer areas, and at locations where workers congregate for lunch and break periods?				
Is litter from work areas collected and placed in watertight dumpsters?				
Are waste management receptacles free of leaks?				
Are the contents of waste management receptacles properly protected from contact with storm water or from being dislodged by winds?				
Are waste management receptacles filled at or beyond capacity?				
Location:				
Location:				
Location:				
Location:				
Temporary Water Body Crossing or Encroachment				
Are temporary water body crossings and encroachments constructed appropriately?				
Does the project conform to the requirements of the 404 permit and/or 1601agreement?				
Location:				
Location:				
Location:				
Location:				
Illicit Connection/ Discharge				
Is there any evidence of illicit discharges or illegal dumping on the project site?				
If yes, has the Owner/Operator been notified?				
Location:				
Location:				
Location:				
Location:				
Discharge Points				
Are discharge points and discharge flows free from visible pollutants?				
Are discharge points free of any significant sediment transport?				
Location:				
Location:				

INSPECTION OF BMPs				
BMP	**Yes**	**No**	**N/A**	**Corrective Action**
Location:				
Location:				
SWPPP Update				
Does the SWPPP and Project Schedule adequately reflect the current site conditions and contractor operations?				
Are all BMPs shown on the water pollution control drawings installed in the proper location(s) and according to the details in the SWPPP?				
Location:				
Location:				
Location:				
Location:				
General				
Are there any other potential concerns at the site?				
Location:				
Location:				
Location:				
Location:				
Storm Water Monitoring				
Does storm water discharge directly to a water body listed in the General Permit as impaired for sediment/sedimentation or turbidity?				
If yes, were samples for sediment/sedimentation or turbidity collected pursuant to the sampling and analysis plan in the SWPPP?				
Did the sampling results indicate that the discharges are causing or contributing to further impairment?				
If yes, were the erosion/sediment control BMPs improved or maintained to reduce the discharge of sediment to the water body?				
Were there any BMPs not properly implemented or breaches, malfunctions, leakages or spills observed which could result in the discharge of pollutants to surface waters that would not be visually detectable in storm water?				
If yes, were samples for non-visually detectable pollutants collected pursuant to the sampling and analysis plan during rain events?				
If sampling indicated pollution of the storm water, were the leaks, breaches, spills, etc. cleaned up and the contaminated soil properly disposed of?				
Were the BMPs maintained or replaced?				
Were soil amendments (e.g., gypsum, lime) used on the project?				

INSPECTION OF BMPs				
BMP	**Yes**	**No**	**N/A**	**Corrective Action**
If yes, were samples for non-visually detectable pollutants collected pursuant to the sampling and analysis plan in the SWPPP?				
If sampling indicated pollution of the storm water by the use of the soil amendments, is there a contingency plan for retention onsite of the polluted storm water?				
Did storm water contact stored materials or waste and run off the construction site? (Materials not in watertight containers, etc.)				
If yes, were samples for non-visually detectable pollutants collected pursuant to the sampling and analysis plan in the SWPPP?				

Attachment I

Trained Contractor Personnel Log

INSTRUCTIONS

- Use this sheet to record individuals attending formal training programs specified in section 500.7 of the SWPPP. This form may also be used to record informal tailgate on-site meetings on storm water management.

Storm Water Management Training Log

Project Name: _____

Project Number/Location: _____

Storm Water Management Topic: (check as appropriate)

- ❑ Erosion Control
- ❑ Sediment Control
- ❑ Wind Erosion Control
- ❑ Tracking Control
- ❑ Non-storm water management
- ❑ Waste Management and Materials Pollution Control
- ❑ Storm Water Sampling

Specific Training Objective: _____

Location: _____ Date: _____

Instructor: _____ Telephone: _____

Course Length (hours): _____

Attendee Roster (attach additional forms if necessary)

Name	Company	Phone

Name	Company	Phone

COMMENTS:

_____

_____

_____

_____

_____

Attachment J

Subcontractor Notification Letter and Notification Log

INSTRUCTIONS

- Use this sample to prepare the subcontractor letter and log required in Section 500.8 of the SWPPP.

SWPPP Notification

Company
Address
City, State, ZIP

Dear Sir/Madam,

Please be advised that the California State Water Resources Control Board has adopted the General Permit (General Permit) for Storm Water Discharges Associated with Construction Activity (CAS000002). The goal of these permits is prevent the discharge of pollutants associated with construction activity from entering the storm drain system, ground and surface waters.

[Owner/Developer/Contractor] has developed a Storm Water Pollution Prevention Plan (SWPPP) in order to implement the requirements of the Permits.

As a subcontractor, you are required to comply with the SWPPP and the Permits for any work that you perform on site. Any person or group who violates any condition of the Permits may be subject to substantial penalties in accordance with state and federal law. You are encouraged to advise each of your employees working on this project of the requirements of the SWPPP and the Permits. A copy of the Permits and the SWPPP are available for your review at the construction office. Please contact me if you have further questions.

Sincerely,

Name
Title

SUBCONTRACTOR NOTIFICATION LOG

Project Name: _____

Project Number/Location: _____

SUBCONTRACTOR COMPANY NAME	CONTACT NAME	ADDRESS	PHONE NUMBER	PAGER/ FIELD PHONE	DATE NOTIFICATION LETTER SENT	TYPE OF WORK

USE ADDITIONAL PAGES AS NECESSARY

Attachment K

Notice of Non-Compliance

INSTRUCTIONS

- This form will used to report instances of discharges. The completed form will be submitted to the [City] Engineer within 7 days of the assessment of non-compliance, discharge, written notice or orders from a regulatory agency.

To: Name of [City] Engineer/Regional Board Staff Date: Insert Date

Subject: Notice of Non-Compliance

Project Name: Insert Project Name

Project Number/Location: Project number

In accordance with the NPDES Statewide Permit for Storm Water Discharges Associated with Construction Activity, the following instance of discharge is noted:

Date, time, and location of discharge

Insert description and date of event

Nature of the operation that caused the discharge

insert description of operation

Initial assessment of any impact cause by the discharge

insert assessment

Existing BMP(s) in place prior to discharge event

list BMPs in place

Date of deployment and type of BMPs deployed after the discharge.

BMPs deployed after the discharge (with dates)

Steps taken or planned to reduce, eliminate and/or prevent recurrence of the discharge

insert steps taken to prevent recurrence

Implementation and maintenance schedule for any affected BMPs

insert implementation and maintenance schedule

If further information or a modification to the above schedule is required, notify the contact person below.

Name of Contact Person	Title
Company	Telephone Number
Signature	Date

Attachment L

Storm Water Pollution Prevention Plan (SWPPP) and Monitoring Program Checklist

INSTRUCTIONS

- This form provides a checklist of all items that shall be included in the SWPPP.
- The checklist shall be completed by the contractor to ensure that all required elements of the SWPPP have been addressed.
- The completed SWPPP Checklist shall be included as Appendix L of the final SWPPP.

CONSTRUCTION PROJECT: _____

CONTRACTOR: _____

CONTRACT NO: _____

SECTION A: STORM WATER POLLUTION PREVENTION PLAN (SWPPP)				
CHECK IF ADDRESSED N/A IF NOT APPLICABLE	**SWPPP Section**	**ITEM**	**GENERAL PERMIT REF.**	**COMMENTS**
	100	***SWPPP Certification and Approval***	C.10	
	100.1	SWPPP Certification	C.10	
	100.2	SWPPP Approval	C.10	
	200	***SWPPP Amendments***	A.4.a, A.16	
	200.1	Amendment number and date entered into SWPPP – Amendment Log	A.4.a, A.16	
	200.2	Amendment Certification and Approval	A.4.a, A.16	
	300	***Introduction/Project Description***		
	300.1	Project Description and Location (narrative)	A.5.a.1	
	300.2	Unique Site Features (narrative)	A.5.a.1	
	300.4	***Project Schedule (narrative and graphical)***	A.5.c.5	

SECTION A: STORM WATER POLLUTION PREVENTION PLAN (SWPPP)				
CHECK IF ADDRESSED N/A IF NOT APPLICABLE	**SWPPP Section**	**ITEM**	**GENERAL PERMIT REF.**	**COMMENTS**
	400	***References***	A.14	
	500.2	***Vicinity Map (narrative or graphic)***	A.5.a.1	
	500.2	Site perimeter	A.5.a.1	
	500.2	Geographic Features	A.5.a.1	
	500.2	General topography	A.5.a.1	
	500.4	***Water Pollution Control Drawings (WPCDs) (graphic or narrative)***	A.5.a.2	
	500.4	Site perimeter	A.5.a.2	
	500.4	Existing and proposed buildings, lots, and roadways	A.5.a.2	
	500.4	Storm water collection and discharge points	A.5.a.2	
	500.4	General topography before and after construction	A.5.a.2	
	500.4	Anticipated discharge location(s)	A.5.a.2	
	500.4	Drainage patterns including the entire relevant drainage areas	A.5.a.2	
	500.4	Temporary on-site drainage(s)	A.5.a.2	
	500.3	***Pollutant Source and BMP Identification (narrate/ or indicate on site map)***	A.5.b	
		Drainage	A.5.b.1	
	500.4	Drainage patterns after major grading	A.5.b.1	
	500.4	Slopes after major grading	A.5.b.1	
	Attach. E	Calculations for storm water run-on	A.5.b.1	
	500.4	BMPs that divert off-site drainage from passing through site	A.5.b.1	
	500.4	***Storm Water Inlets***	A.5.b.2	
	500.4	Drainage patterns to storm water inlets or receiving water	A.5.b.2	
	500.4	BMPs that protect storm water inlets or receiving water	A.5.b.2	
		Site History (narrative; if possible, indicate location(s) on the Water Pollution Control Drawings)	A.5.b	
	500.3.3	Nature of fill material and data describing the soil. Description of toxic materials treated, stored, disposed, spilled or leaked on site	A.5.b.3	
	500.3.8 & 500.3.9	BMPs that minimize contact of contaminants with storm water	A.5.b.3	
		Location of Areas Designated for:	A.5.b.4	

SECTION A: STORM WATER POLLUTION PREVENTION PLAN (SWPPP)				
CHECK IF ADDRESSED N/A IF NOT APPLICABLE	**SWPPP Section**	**ITEM**	**GENERAL PERMIT REF.**	**COMMENTS**
	500.3.8 & 500.4	Vehicle storage & service	A.5.b.4	
	500.3.8 & 500.4	Equipment storage, cleaning, maintenance	A.5.b.4	
	500.3.9 & 500.4	Soil or waste storage	A.5.b.4	
	500.3.9 & 500.4	Construction material loading, unloading, storage and access	A.5.b.4	
	500.3.8 & 500.3.9	Areas outside of physical site (yards, borrow areas, etc.)		
		BMP Locations or Descriptions for:	A.5.b.5	
	500.3.9 & 500.4	Waste handling and disposal areas	A.5.b.5	
	500.3.9 & 500.4	On-site storage and disposal of construction materials and waste	A.5.b.5	
	500.3.8, 500.3.9 & 500.4	Minimum exposure of storm water to construction materials, equipment, vehicles, waste	A.5.b.5	
	500.6	***Post Construction BMPs***	A.5.b.6	
	500.6.1	Listing or Description of Post-construction BMPs	A.5.b.6	
	500.4	Location of post-construction BMPs	A.5.b.6	
	500.6.2	Parties responsible for long-term maintenance	A.5.b.6	
		Additional Information	A.5.c	
	500.3.1	Description of other pollutant sources and BMPs	A.5.c.1	
	500.3.2	Pre-construction control practices	A.5.c.1	
	500.3.1	Inventory of materials and activities that may pollute storm water	A.5.c.2	
	500.3.8 & 500.3.9	BMPs to reduce/eliminate potential pollutants listed in the inventory	A.5.c.2	
	300.4	Runoff coefficient (before & after)	A.5.c.3	
	300.4	Percent impervious (before & after)	A.5.c.3	
	Attach. F	Copy of the NOT	A.5.c.4	
	300.3	Construction activity schedule	A.5.c.5	
	300.5	Contact information	A.5.c.6	
	500.4.1	**SOIL STABILIZATION (EROSION CONTROL)**	A.6	
		The SWPPP shall include:	A.6.a-c	
	500.4	Areas of vegetation on site	A.6.a.1	

SECTION A: STORM WATER POLLUTION PREVENTION PLAN (SWPPP)				
CHECK IF ADDRESSED N/A IF NOT APPLICABLE	**SWPPP Section**	**ITEM**	**GENERAL PERMIT REF.**	**COMMENTS**
	500.4	Areas of soil disturbance that will be stabilized during rainy season	A.6.a.2	
	500.4	Areas of soil disturbance which will be exposed during any part of the rainy season	A.6.a.3	
	300.4	Implementation schedule for erosion control measures	A.6.a.4	
	500.3.4	BMPs for erosion control	A.6.b	
	500.3.7	BMPs to control wind erosion	A.6.c	
	500.3.5	**SEDIMENT CONTROL**	A.8	
	500.3.5 & 500.4	Description/Illustration of BMPs to prevent increase of sediment load in discharge	A.8	
	300.4, 500.3.5	Implementation schedule for sediment control measures	A.8	
	500.3.6	BMPs to control sediment tracking	A.8	
	500.3.8 & 500.3.9	**NON-STORM WATER MANAGEMENT**	A.9	
	500.3.8 & 500.3.9	Description of non-storm water discharges to receiving waters	A.9	
	500.3.8 & 500.3.9	Locations of discharges	A.9	
	500.3.8 & 500.3.9	Description of BMPs	A.9	
	300.5	Name and phone number of person responsible for non-storm water management	A.9	
	500.6	**POST-CONSTRUCTION**	A.10	
	500.6.1	Description of post-construction BMPs	A.10	
	500.6.2	Operation/Maintenance of BMPs after project completion (including short-term funding, long-term funding and responsible party)	A.10	
	500.5	**MAINTENANCE, INSPECTIONS, AND REPAIR**	A.11	
	300.5, 600.1	Name and phone number of person(s) responsible for inspections	A.11	
	600.1, Attach. H	Complete inspection checklist: date, weather, inadequate BMPs, visual observations of BMPs, corrective action, inspector's name, title, signature	A.11.a-f	
		OTHER REQUIREMENTS	A.12-16	
	500.7	Documentation of all training	A.12	
	500.8	List of Contractors/Subcontractors	A.13	

SECTION B: MONITORING AND REPORTING REQUIREMENTS				
CHECK IF ADDRESSED N/A IF NOT APPLICABLE	**SWPPP Section**	**ITEM**	**GENERAL PERMIT REF.**	**COMMENTS**
	600.1	Description of Site Inspection Plans	B.3	
	100.3	Compliance certification (annually 7/1)	B.4	
	600.2	Discharge reporting	B.5	
	600.3	Keep records of all inspections, compliance certifications, and noncompliance reports on site for a period of at least three years	B.6	
	600.4	Sampling and Analysis Plan for Sediment	B.7	
	600.5	Sampling and Analysis Plan for Non-Visible Pollutants	B.8	

SECTION C: STANDARD PROVISIONS FOR CONSTRUCTION ACTIVITIES				
CHECK IF ADDRESSED N/A IF NOT APPLICABLE	**SWPPP Section**	**ITEM**	**GENERAL PERMIT REF.**	**COMMENTS**
	100.1	Signed SWPPP Certification	C.9,10	

Attachment M

Annual Certification of Compliance Form

INSTRUCTIONS

- By July 1 of each year, the Owner/Developer/Contractor shall complete and submit this form to the RWQCB, together with the annual fee, as required in Section 100.3 of the SWPPP. Annual certification of compliance is based on the site inspections required in the SWPPP.
- Completed and signed Annual Certifications and Approvals shall be included in Section 100.3 of the SWPPP following the required text of the section.
- This Annual Certification of Compliance form does not need to be completed at the initial approval, but it shall be submitted during the first year of the initial SWPPP approval.

Project Name: _____

Project Number: _____

Contractor Company Name: _____

Contractor Address: _____

Construction Start Date: _____ **Completion Date:** _____

Description of Work:

description of work

Work Now in Progress:

work in progress

Work Planned for Next 12 Months:

work planned

"I certify under penalty of law that this document and all attachments were prepared under my direction or supervision in accordance with a system designed to assure that qualified personnel properly gather and evaluate the information submitted. Based on my inquiry of the person or persons who manage the system or those persons directly responsible for gathering the information, to the best of my knowledge and belief, the information submitted is, true, accurate, and complete. I am aware that there are significant penalties for submitting false information, including the possibility of fine and imprisonment for knowing violations."

Owner/Developer/Contractor Signature	Date

Attachment N

Other Plans and Permits

INSTRUCTIONS

- Include in this attachment a copy of the General Construction Permit CAS000002
- Include in this attachment a copy of SWRCB Resolution 2001-046
- Also include copies of other local, state, and federal plans and permits page. List of other plans and permits shall be included in Section 500.9 of the SWPPP.

Attachment O

Water Pollution Control Cost Breakdown

INSTRUCTIONS

- The following Water Pollution Control Cost Breakdown shall be used as the basis for estimating the lump sum item for "Water Pollution Control." Modify the table as follows:

  - Caution: Do not use "Strike and Hide" to eliminate rows; delete rows. Do not "underline" text in the table.

  - If a BMP is included as a separate bid item, such as Silt Fence, delete that Item from the table as it is not to be duplicated in the cost break down.

  - For all Items in the table, delete those that are not applicable for water pollution control for the specific project. The Contractor will select from among the remaining items per the "Construction Site BMPs Consideration Checklist" and designate an Estimated Quantity, Value, and Amount for each Item selected on the cost break down submitted with the SWPPP.

REQUIRED TEXT:

Project Name: _____

Project Number: _____

ITEM	ITEM DESCRIPTION	UNIT	ESTIMATED QUANTITY	VALUE	AMOUNT
EC-3	Hydraulic Mulch	FT^2			
EC-4	Hydroseeding	FT^2			
EC-5	Soil Binders	FT^2			
EC-6	Straw Mulch	FT^2			
EC-7	Geotextiles & Mats	FT^2			
EC-8	Wood Mulching	FT^2			
EC-9	Earth Dikes & Drainage Swales	FT			
EC-10	Velocity Dissipation Devices	EA			
EC-11	Slope Drains	EA			

ITEM	ITEM DESCRIPTION	UNIT	ESTIMATED QUANTITY	VALUE	AMOUNT
EC-12	Streambank Protection	LS			
EC-13	Polyacrylamide	LS			
SE-1	Silt Fence	FT			
SE-2	Sediment Basin	EA			
SE-3	Sediment Trap	EA			
SE-4	Check Dam	EA			
SE-5	Fiber Rolls	FT			
SE-6	Gravel Bag Berm	FT			
SE-7	Street Sweeping and Vacuuming	LS			
SE-8	Sandbag Barrier	FT			
SE-9	Straw Bale Barrier	FT			
SE-10	Storm Drain Inlet Protection	EA			
WE-1	Wind Erosion Control	LS			
TC-1	Stabilized Construction Entrance/Exit	EA			
TC-2	Stabilized Construction Roadway	EA			
TC-3	Entrance/Outlet Tire Wash	EA			
NS-1	Water Conservation Practices	LS			
NS-2	Dewatering Operations	EA			
NS-3	Paving and Grinding Operations	LS			
NS-4	Temporary Stream Crossing	EA			
NS-5	Clear Water Diversion	EA			
NS-6	Illicit Connection/ Discharge	LS			
NS-7	Potable Water/Irrigation	LS			
NS-8	Vehicle and Equipment Cleaning	LS			
NS-9	Vehicle and Equipment Fueling	LS			
NS-10	Vehicle and Equipment Maintenance	LS			
NS-11	Pile Driving Operations	LS			
NS-12	Concrete Curing	LS			
NS-13	Material and Equipment Use Over Water	LS			
NS-14	Concrete Finishing	LS			
NS-15	Demolition Adjacent to Water	LS			
NS-16	Temporary Batch Plants	LS			
WM-1	Material Delivery and Storage	LS			

ITEM	ITEM DESCRIPTION	UNIT	ESTIMATED QUANTITY	VALUE	AMOUNT
WM-2	Material Use	LS			
WM-3	Stockpile Management	LS			
WM-4	Spill Prevention and Control	LS			
WM-5	Solid Waste Management	LS			
WM-6	Hazardous Waste Management	LS			
WM-7	Contaminated Soil Management	LS			
WM-8	Concrete Waste Management	LS			
WM-9	Sanitary/Septic Waste Management	LS			
WM-10	Liquid Waste Management	LS			
			TOTAL		

Attachment P

Notice of Termination

INSTRUCTIONS

- The Notice of Termination (NOT) of construction will be inserted at the end of the project.

Attachment Q

BMPs Selected for the Project

INSTRUCTIONS

- Insert a list or copies of BMPs, from the *California Stormwater BMP Handbook, Construction*, selected for this project, after this page. If only a list is inserted, a copy of the handbook must be kept at the project site with the SWPPP at all times.

Attachment R

Sampling Activity Log

INSTRUCTIONS

- Use this form to log sampling activities.

RAIN EVENT GENERAL INFORMATION				
Project Name				
Project Number				
Contractor				
Sampler's Name				
Signature				
Date of Sampling				
Season (Check Applicable)	❒ Rainy		❒ Non-Rainy	
Storm Data	Storm Start Date & Time:		Storm Duration (hrs):	
	Time elapsed since last storm (Circle Applicable Units)	Min. Hr. Days	Approximate Rainfall Amount (inches)	

For rainfall information: http://cdec.water.ca.gov/weather.html or http://www.wrh.noaa.gov/wrhq/nwspage.html

SAMPLE LOG		
Sample Identification	**Sample Location**	**Sample Collection Date and Time**

Specific sample locations descriptions may include: 100 ft upstream from discharge at eastern boundary, runoff from northern waste storage area, downgradient of inlet located near the intersection of A Street and B avenue, etc.

FIELD ANALYSIS		
❑Yes	❑ No	
Sample Identification	**Test**	**Result**

Attachment S

Pollutant Testing Guidance Table

INSTRUCTIONS

- The following Table will be updated periodically as more information becomes available.

Attachment S
Pollutant Testing Guidance Table [1]

Category	Construction Site Material	Visually Observable?	Pollutant Indicators [2]	Suggested Analyses Field [3]	Laboratory
Asphalt Products	Hot Asphalt	Yes - Rainbow Surface or Brown Suspension	Visually Observable - No Testing Required		
	Asphalt Emulsion				
	Liquid Asphalt (tack coat)				
	Cold Mix				
	Crumb Rubber	Yes – Black, solid material	Visually Observable - No Testing Required		
	Asphalt Concrete (Any Type)	Yes - Rainbow Surface or Brown Suspension	Visually Observable - No Testing Required		
Cleaning Products	Acids	No	**pH** Acidity Anions (acetic acid, phosphoric acid, sulfuric acid, nitric acid, hydrogen chloride)	pH Meter Acidity Test Kit	EPA 150.1 (pH)
					SM 2310B (Acidity)
					EPA 300.0 (Anion)
	Bleaches	No	Residual Chlorine	Chlorine	SM 4500-CL G (Res. Chlorine)
	Detergents	Yes - Foam	Visually Observable - No Testing Required		
	TSP	No	Phosphate	Phosphate	EPA 365.3 (Phosphate)
	Solvents	No	**VOC**	None	EPA 601/602 or EPA 624 (VOC)
			SVOC	None	EPA 625 (SVOC)

Attachment S
Pollutant Testing Guidance Table [1]

Category	Construction Site Material	Visually Observable?	Pollutant Indicators [2]	Suggested Analyses Field [3]	Laboratory
Portland Concrete Cement & Masonry Products	Portland Cement (PCC)	Yes - Milky Liquid	Visually Observable - No Testing Required		
	Masonry products	No	**pH**	pH Meter Alkalinity or Acidity Test Kit	EPA 150.1 (pH)
			Alkalinity		SM 2320 (Alkalinity)
	Sealant (Methyl Methacrylate - MMA)	No	Methyl Methacrylate	None	EPA 625 (SVOC)
			Cobalt		EPA 200.8 (Metal)
			Zinc		
	Incinerator Bottom Ash Bottom Ash Steel Slag Foundry Sand Fly Ash Municipal Solid Waste	No	**Aluminum** **Calcium** **Vanadium** **Zinc**	Calcium Test	EPA 200.8 (Metal) EPA 200.7 (Calcium)
	Mortar	Yes - Milky Liquid	Visually Observable - No Testing Required		
	Concrete Rinse Water	Yes - Milky Liquid	Visually Observable - No Testing Required		
	Non-Pigmented Curing Compounds	No	Acidity	pH Meter Alkalinity or Acidity Test Kit	SM 2310B (Acidity)
			Alkalinity		SM 2320 (Alkalinity)
			pH		EPA 150.1 (pH)
			VOC		EPA 601/602 or EPA 624 (VOC)
			SVOC		EPA 625 (SVOC)

Attachment S
Pollutant Testing Guidance Table [1]

Category	Construction Site Material	Visually Observable?	Pollutant Indicators [2]	Suggested Analyses Field [3]	Laboratory
Landscaping and Other Products	Aluminum Sulfate	No	Aluminum	TDS Meter Sulfate	EPA 200.8 (Metal)
			TDS		EPA 160.1 (TDS)
			Sulfate		EPA 300.0 (Sulfate)
	Sulfur-Elemental	No	Sulfate	Sulfate	EPA 300.0 (Sulfate)
	Fertilizers-Inorganic [4]	No	Nitrate	Nitrate	EPA 300.0 (Nitrate)
			Phosphate	Phosphate	EPA 365.3 (Phosphate)
			Organic Nitrogen	None	EPA 351.3 (TKN)
			Potassium	None	EPA 200.8 (Metal)
	Fertilizers-Organic	No	TOC	Nitrate	EPA 415.1 (TOC)
			Nitrate		EPA 300.0 (Nitrate)
			Organic Nitrogen		EPA 351.3 (TKN)
			COD		EPA 410.4 (COD)
	Natural Earth (Sand, Gravel, and Topsoil)	Yes - Cloudiness and turbidity	Visually Observable - No Testing Required		
	Herbicide	No	Herbicide	None	Check lab for specific herbicide or pesticide
	Pesticide		**Pesticide**		
	Lime		Alkalinity	pH Meter Alkalinity or Acidity Test Kit	SM 2320 (Alkalinity)
			pH		EPA 150.1 (pH)

Attachment S
Pollutant Testing Guidance Table [1]

Category	Construction Site Material	Visually Observable?	Pollutant Indicators [2]	Suggested Analyses Field [3]	Laboratory
Painting Products	Paint	Yes	Visually Observable - No Testing Required		
	Paint Strippers	No	VOC	None	EPA 601/602 or EPA 624 (VOC)
			SVOC	None	EPA 625 (SVOC)
	Resins	No	COD	None	EPA 410.4 (COD)
			SVOC		EPA 625 (SVOC)
	Sealants	No	COD	None	EPA 410.4 (COD)
	Solvents	No	COD	None	EPA 410.4 (COD)
			VOC		EPA 601/602 or EPA 624 (VOC)
			SVOC		EPA 625 (SVOC)
	Lacquers, Varnish, Enamels, and Turpentine	No	COD	None	EPA 410.4 (COD)
			VOC		EPA 601/602 or EPA 624 (VOC)
			SVOC		EPA 625 (SVOC)
	Thinners	No	VOC	None	EPA 601/602 or EPA 624 (VOC)
			COD		EPA 410.4 (COD)
Portable Toilet Waste Products	Portable Toilet Waste	Yes	Visually Observable - No Testing Required		

Attachment S
Pollutant Testing Guidance Table [1]

Category	Construction Site Material	Visually Observable?	Pollutant Indicators [2]	Suggested Analyses Field [3]	Laboratory
Contaminated Soil [5]	Aerially Deposited Lead[3]	No	Lead	None	EPA 200.8 (Metal)
	Petroleum	Yes – Rainbow Surface Sheen and Odor	Visually Observable - No Testing Required		
	Other	No	Contaminant Specific	Contaminant Specific	Contaminant Specific
Line Flushing Products	Chlorinated Water	No	Total chlorine	Chlorine	SM 4500-CL G (Res. Chlorine)
Adhesives	Adhesives	No	COD	None	EPA 410.4 (COD)
			Phenols	Phenol	EPA 420.1 (Phenol)
			SVOC	None	EPA 625 (SVOC)
Dust Palliative Products	Salts (Magnesium Chloride, Calcium Chloride, and Natural Brines)	No	Chloride	Chloride	EPA 300.0 (Chloride)
			TDS	TDS Meter	EPA 160.1 (TDS)
			Cations (Sodium, Magnesium, Calcium)	None	EPA 200.7 (Cations)
Vehicle	Antifreeze and Other Vehicle Fluids	Yes - Colored Liquid	Visually Observable - No Testing Required		
	Batteries	No	Sulfuric Acid	None	EPA 300.0 (Sulfate)
			Lead	None	EPA 200.8 (Metal)
			pH	pH Meter Alkalinity or Acidity Test Kit	EPA 150.1 (pH)
	Fuels, Oils, Lubricants	Yes - Rainbow Surface Sheen and Odor	Visually Observable - No Testing Required		

Attachment S
Pollutant Testing Guidance Table [1]

Category	Construction Site Material	Visually Observable?	Pollutant Indicators [2]	Suggested Analyses Field [3]	Laboratory
Soil Amendment/Stabilization Products	Polymer/Copolymer [6, 7]	No	Organic Nitrogen	None	EPA 351.3 (TKN)
			BOD	None	EPA 405.1 (BOD)
			COD	None	EPA 410.4 (COD)
			DOC	None	EPA 415.1 (DOC)
			Nitrate	Nitrate	EPA 300.0 (Nitrate)
			Sulfate	Sulfate	EPA 300.0 (Sulfate)
			Nickel	None	EPA 200.8 (Metal)
	Straw/Mulch	Yes - Solids	Visually Observable - No Testing Required		
	Lignin Sulfonate	No	Alkalinity	Alkalinity	SM 2320 (Alkalinity)
			TDS	TDS Meter	EPA 160.1 (TDS)
	Psyllium	No	COD	None	EPA 410.4 (COD)
			TOC		EPA 415.1 (TOC)
	Guar/Plant Gums	No	COD	None	EPA 410.4 (COD)
			TOC		EPA 415.1 (TOC)
			Nickel		EPA 200.8 (Metal)
	Gypsum	No	pH	pH Meter Alkalinity or Acidity Test Kit	EPA 150.1 (pH)
			Calcium	Calcium	EPA 200.7 (Calcium)
			Sulfate	Sulfate	EPA 300.0 (Sulfate)
			Aluminum	None	EPA 200.8 (Metal)
			Barium		
			Manganese		
			Vanadium		

Attachment S
Pollutant Testing Guidance Table [1]

Category	Construction Site Material	Visually Observable?	Pollutant Indicators [2]	Suggested Analyses Field [3]	Laboratory
Treated Wood Products	Ammoniacal-Copper-Zinc-Arsenate (ACZA) Copper-Chromium-Arsenic (CCA) Ammoniacal-Copper-Arsenate (ACA) Copper Naphthenate	No	Arsenic Total Chromium Copper Zinc	Total Chromium	EPA 200.8 (Metal)
	Creosote	Yes - Rainbow Surface or Brown Suspension	Visually Observable - No Testing Required		

Notes:

1. 1 If specific pollutant is known, analyze only for that specific pollutant. See MSDS to verify.
2. For each construction material, test for one of the pollutant indicators. Bolded pollutant indicates lowest analysis cost or best indicator. However, the composition of the specific construction material, if known, is the first criterion for selecting which analysis to use.
3. See www.hach.com, www.lamotte.com, www.ysi.com and www.chemetrics.com for some of the test kits
4. If the type of inorganic fertilizer is unknown, analyze for all pollutant indicators listed.
5. Only if special handling requirements are required in the contract documents for aerially deposited lead (ADL)
6. If used with a dye or fiber matrix, it is considered visually observable and no testing is required.
7. Based upon research conducted by the State of California Department of Transportation (Caltrans), the following copolymers/polymers do not discharge pollutants and water quality sampling and analysis is **not** required: Super Tak™, M-Binder™, Fish Stik™, Pro40dc™, Fisch-Bond™, and Soil Master WR™.

Appendix C
Construction Stormwater Sampling and Analysis Guidance

SWQTF
California Stormwater Quality Task Force
7000 East Ave., L-627 Livermore, CA 92550-9234
Ph (925) 423-6679 Fax (925) 422-2748
www.stormwatertaskforce.org

Construction Storm Water Sampling and Analysis Guidance Document

To assist dischargers in complying with California State Water Resources Control Board Resolution No. 2001-046

October 2001

Purpose of Document, Compliance Notification, and Limitations

The purpose of this guidance document is to assist members of the Task Force and other dischargers subject to the Construction Activity Storm Water Discharge Permit, Order 99-08-DWQ, (General Permit) in implementing Resolution 2001-046. Users of this document are fully responsible for determining its suitability. Dischargers are fully responsible for compliance with the permit as amended. Compliance determinations are made by the Regional Water Quality Control Boards, the State Water Resources Control Board, and the U.S. Environmental Protection Agency. Dischargers who have questions about specific requirements of the General Permit, or this guidance document are advised to consult with the appropriate Regional Water Quality Control Board. Failure to comply with the General Permit as amended can result in significant administrative, civil, and criminal penalties.

Users of this document shall note the following limitations on its use:

- The scope of this document is limited to providing guidance on Resolution 2001-046 and does not address all of the monitoring requirements of General Permit. Subsequent Resolutions and Orders issued by the State Board and Orders or policies issued by Regional Boards are also not addressed by this document.

- The purpose of this document was to provide general information to assist dischargers through the process of developing a sampling and analysis strategy. Every possible situation that may expose pollutants to storm water on a construction site is not considered by this document. Dischargers must consider the full range of exposure of materials on their construction sites and develop an appropriate sampling and analysis strategies.

- Storm water requirements, including sampling and analysis strategies must be site specific for each individual project. Users need to adapt the recommendations in this document to each project individually.

- Regulatory interpretations may change over time as a result of new information, new court cases, or new laws. While this document was developed with the input of State and Regional Board input, users should consult with their regulators for current interpretations.

- The sampling and analysis requirements of Resolution 2001-046 are governed by the NPDES regulations. Users should be aware that these regulations and State regulations implementing the NPDES program contain significant requirements regarding quality assurance, quality control, qualifications of analytical laboratories, etc. that are not explicitly addressed by this document. Users should consult the NPDES regulations, or Regional Board staff to determine any additional requirements.

- Compliance with this guidance document does not automatically equate to compliance with the General Permit or Resolution 2001-046. Further, modifying a site specific sampling and analysis strategy to include or exclude items described in this guidance document does not necessarily mean that the site specific strategy is out of compliance the General Permit or Resolution 2001-046.

Contents

Purpose of Document, Compliance Notification, and Limitations i

1.0 Introduction 1
1.1 Organization of this Document 2
1.2 Background 2
1.2.1 Impaired Water Bodies 3
1.2.2 Non-visible pollutant sampling 3
1.3 Purpose of Sampling 3

2.0 Monitoring Program for Sedimentation/Siltation 5
2.1 What the Permit Says on Monitoring 5
2.2 Deciding When to Sample 5
2.3. Deciding What to Sample 6
2.4 Deciding Where to Sample 8
2.5 Deciding How to Sample 8
2.6 How to Use Your Data 9
2.6.1 Coupling Your Visual Observations with Your Analytical Data 9
2.6.2 What on Your Site May Be Causing Sediment, Silt and/or Turbidity 9
2.6.3 What To Do If You Get Data That Shows a Problem 9
2.7 Retention of Data 10

3.0 Monitoring Program for Pollutants Not Visually Detectable in Storm Water 11
3.1 What the Permit Says on Monitoring 11
3.2 What are "known or should be known pollutants" 11
3.3 Deciding If Sampling is Required (When to Sample) 12
3.3.1 Sampling and Analysis is Not Required 13
3.3.2 Sampling and Analysis Is Required 13
3.3.3 Coordinating between Inspection Findings and Sampling 14
3.4 Deciding What to Sample 16
3.5 Deciding How to Sample 16
3.6 Deciding Where to Sample 16
3.7 How to Use Your Sampling Data 17
3.7.1 Coupling Your Visual Observations with Your Sampling Results 17
3.7.2 What To Do If You Get Data That Shows a Problem 17
3.8 Retention of Data 18

4.0 Sampling Procedures 19

5.0 Definitions 22
Chain of Custody (COC) Form 22
Direct Discharge 22
Electrical Conductivity (EC) 22
Field Measurements 22

Field Tracking Form (FTF) 22
Holding Time 22
pH 23
Sampling and Analysis Plan 23
Sediment 23
Sedimentation/Siltation 23
Settleable Solids 23
Silt 23
Soil Amendment 23
Suspended Sediment Concentration (SSC) 24
Total Suspended Solids (TSS) 24
Turbidity 24

6.0 Sources of Further Assistance 25
Regional Water Quality Control Boards 25
State Water Resources Control Board 26
How to Obtain a List of State Certified Laboratories 26
Other Useful Web Sites 26
California Stormwater Quality Task Force 26
California Department of Transportation 26

List of Tables

2-1 Laboratory Requirements for Storm Water Monitoring of Sediment, Siltation and Turbidity 7

List of Figures

1-1 General Permit Monitoring and Analysis Requirements 4
3-1 Monitoring for Non-Visually Detectable Pollutants 15
4-1 Outline for a Typical Storm Water Sampling and Analysis Plan 21

Appendices

A General Outline of Information that should be included in your SWPPP for the Sampling and Analysis Requirements
B List of Common Potential Non-visible Pollutants at Construction Projects

Construction Storm Water Sampling and Analysis Guidance Document

1.0 Introduction

The purpose of this document is to provide guidance to owners and operators of construction sites who are permitees under the State Water Resources Control Board's National Pollutant Discharge Elimination System (NPDES) General Permit For Storm Water Discharges Associated With Construction Activity (General Permit), as modified by Resolution No. 2001-046, "*Modification of Water Quality Order 99-08-DWQ State Water Resources Control Board (SWRCB) National Pollutant Discharge Elimination System (NPDES) General Permit For Storm Water Discharges Associated With Construction Activity (General Permit)*". The modifications to the General Permit require that a sampling and analysis strategy and sampling schedule for discharges from construction activity be developed and included in the project's Storm Water Pollution Prevention Plan (SWPPP). A sampling and analysis strategy and sampling schedule must be developed regardless of the time of the year that construction occurs.

This document was developed by the Construction General Permit Working Group of the California Storm Water Quality Task Force (Task Force) at the request of the State Water Resources Control Board (State Board). The Task Force was formed in 1989 to advise the State Board on storm water discharge issues. The Task Force membership is composed of storm water management and storm water quality professionals from cities, counties, special districts, industries, and consultants throughout California.

The sampling requirements and guidance provided in this document will apply to most construction projects, but may not apply to all construction projects. It is the responsibility of each construction site owner or operator (hereafter discharger) to evaluate their construction project and develop a site-specific sampling and analysis strategy in compliance with the General Permit's requirements. For further guidance and/or direction about what must be accomplished to comply with the General Permit and Resolution 2001-046, please contact your local Regional Water Quality Control Board (RWQCB).

The sampling requirements added to the General Permit by Resolution 2001-046 are intended to supplement the visual monitoring program previously required by the General Permit. All construction projects must continue the visual monitoring program that requires inspections before predicted rain events, during extended rain events, and following actual rain events that produce runoff.

1.1 Organization of this Document

This document is organized to assist the discharger through the evaluation process necessary to develop a sampling and analysis strategy in compliance with the General Permit. Appendix A provides an outline of the actual information that should be included in the project's SWPPP.

Section 1 provides the user with general information on why a sampling and analysis strategy is required.

Section 2 provides information on sediment, silt and turbidity sampling and analysis.

Section 3 provides information on non-visible pollutant sampling and analysis, including what to sample for in construction storm water runoff.

Section 4 provides general information on the sampling and analysis procedures that are applicable to the types of sampling and analysis required by the General Permit.

Section 5 provides useful definitions.

Section 6 provides other sources where one can obtain more information.

1.2 Background

The General Permit was reissued by the SWRCB on August 19, 1999. The San Francisco BayKeeper, Santa Monica BayKeeper, San Diego BayKeeper, and Orange Coast Keeper filed a petition for writ of mandate challenging the General Permit in the Superior Court, County of Sacramento.

On September 15, 2000, the Court issued a judgment and writ of mandate and directed the SWRCB to modify the provisions of the General Permit to require permittees to implement specific sampling and analytical procedures to determine whether Best Management Practices (BMPs) implemented on a construction site are:

(1) preventing further impairment by sediment in storm waters discharged directly into waters listed as impaired (Clean Water Act Section 303(d) List [303(d) List]) for sediment, silt, or turbidity; and

(2) preventing other pollutants that are known or should be known by permittees to occur on construction sites and that can not be visually observed or detected in storm water discharges, from causing or contributing to exceedances of water quality objectives.

The monitoring, sampling and analysis provisions in the General Permit were modified pursuant to the court order and were issued as Resolution No. 2001- 046, adopted by the SWRCB on April 26, 2001.

1.2.1 Impaired Water Bodies

Certain lakes, streams, rivers, creeks and other bodies of water in California have been determined by Regional Water Quality Control Boards to be impaired for sedimentation, siltation, or turbidity. These water bodies are listed in Attachment 3 to the General Permit. (Clean Water Act [CWA] Section 303(d) [303(d)] Water Bodies listed for Sedimentation). Discharges of storm water from construction sites into a 303(d) listed body of water is not prohibited as long as the type and level of pollutant(s) does not cause or contribute to a water quality exceedance.

To obtain the latest list of 303(d) water bodies, visit the State Water Resources Control Board's Web site at http://www.swrcb.ca.gov/.

1.2.2 Non-visible pollutant sampling

Sampling and analysis for non-visible pollutants is required only when construction materials that could pollute runoff are exposed to rain and runoff. Just because a material is present on the construction site does not mean that dischargers must automatically sample for it in runoff. Dischargers can limit the amount of sampling and analysis they perform by limiting the exposure of construction materials to rain and storm water runoff. Materials that are not exposed do not have the potential to enter storm water runoff, and therefore do not need to be sampled in runoff. In cases where construction materials are exposed to rain water but the rain water that contacts them is contained, then sampling only needs to occur when inspections shows the containment failed. Many common Best Management Practices (BMPs) already limit exposure to most materials. Improving these practices to prevent exposure is a better approach to preventing pollution of runoff and will limit the amount of sampling and analysis. Improved BMPs are likely to be less costly than an on-going sampling and analysis program.

1.3 Purpose of Sampling

The purpose of sampling is to determine whether the BMPs employed on a construction site are effective in controlling potential construction site pollutants, which come in contact with storm water, from leaving the site and causing or contributing to an exceedance of water quality objectives in the receiving waters. According to the modifications to the General Permit (Resolution No. 2001-046), there are two categories of monitoring required, as shown below. These new monitoring requirements are illustrated in Figure 1-1.

- sediment in storm water discharged directly to water bodies listed as impaired for sediment/siltation or turbidity on the SWRCB's 303(d) list water bodies; and
- non-visible pollutants.

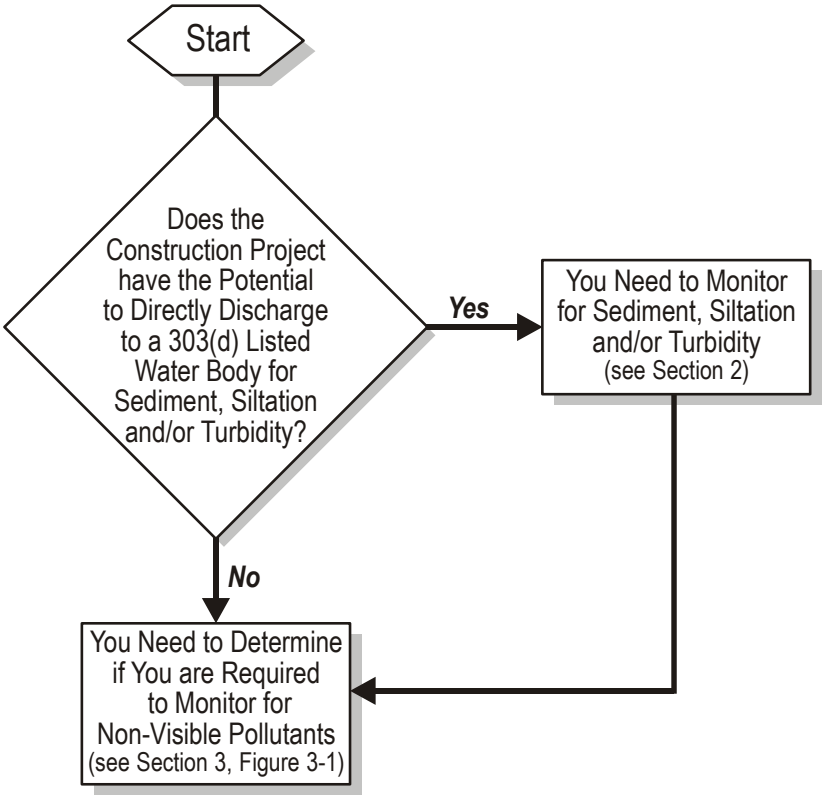

Figure 1-1
General Permit Monitoring and Analysis Requirements

2.0 Monitoring Program for Sedimentation/Siltation

2.1 What the Permit Says on Monitoring

The General Permit requires that storm water BMPs be developed, designed, installed and maintained during construction and post-construction phases. The purpose of the storm water BMPs is to reduce or eliminate pollutants which are caused by, or are the result of, the construction activities from coming in contact with rainfall and storm water surface drainage and/or being discharged off-site with the construction site's storm water runoff.

Soils, sediments, and fine (suspendable) particles that result from grading and earthwork activities and soil erosion from disturbed, un-stabilized land areas are potentially significant sources of storm water pollution at construction sites. The General Permit requires construction sites to develop, implement and maintain a combination of effective erosion control and sediment control BMPs to prevent soils, sediments, debris and suspendable solids from leaving the construction site and moving into receiving waters at levels above pre-construction levels.

The General Permit only requires sampling and analysis for sediment/silt or turbidity when the construction site runoff **discharges directly** into a water body that is impaired by sediment/silt or turbidity (that is, the water body is on the 303d list for one of these impairments.) A key point is that the discharge of runoff must directly enter the impaired water body or impaired segment of a water body. Construction site runoff that flows through a tributary or storm drainage system is not considered a direct discharge even if the flow eventually enters an impaired water body. (See the definition of direct discharge in Section 5 for further details.)

The General Permit requires that the SWPPP identify a strategy for conducting the sampling and analysis, including the frequency at which sampling will be conducted. The SWPPP must also show:

- the location(s) of direct discharges from construction activities to a water body listed on the SWRCB's 303(d) list for sediment, silt and/or turbidity;
- the designated sampling location in the listed water body representing the prevailing conditions up-stream of the discharge; and
- the designated sampling location in the listed water body representing the prevailing conditions down-stream of the discharge.

2.2 Deciding When to Sample

- Sampling must occur when storm water runoff directly discharges from the construction site to a 303(d) listed water body. Refer to Section 2.4, *Where to Sample*, for guidance on sampling locations.

- Samples need only be collected during daylight hours (sunrise to sunset), during the first two hours of discharge (runoff) from storm events which result in a direct discharge to any 303(d) listed water body.

- Storm water runoff samples must be collected regardless of the time of year, status of the construction site, or day of the week. Samples should be collected during the first two hours of runoff. Storm water inspections and sample collections are required even during non-working days (including weekends and holidays).

- Dischargers do not need to sample runoff for more than four (4) rain events per month.

2.3. Deciding What to Sample

- If the water body is listed as impaired for sedimentation or siltation, samples should be analyzed for Settleable Solids (mL/L) and Total Suspended Solids (mg/L) according to EPA 160.2. Samples may be analyzed for suspended sediment concentration (SSC) according to ASTM D3977-97 instead of or in addition to Total Suspended Solids.

- If the water body is listed as impaired for turbidity, samples should be analyzed for turbidity per EPA 180.1 or analyzed in the field using a turbidity meter.

- It is very important that consistent sampling and analysis methods are used for all sampling locations.

- Table 2-1 shows general sample handling and laboratory requirements for sediment sampling.

Table 2-1
LABORATORY REQUIREMENTS[1] FOR STORM WATER MONITORING OF SEDIMENT, SILTATION AND/OR TURBIDITY

Parameters	Analytical Method	Target Reporting Limit	Minimum Sample Volume [2]	Container	Preservative	Holding Time
Total Suspended Solids (TSS) [2]	EPA 160.2	1 mg/L	100 mL	500 mL polypropylene	Store in ice or refrigerator at 4°C (39.2°F)	7 days
Settleable Solids (SS)	EPA 160.5	0.1 mL/L/hour	1 liter	1 liter mL polypropylene	Store in ice or refrigerator at 4°C (39.2°F)	48 hours
Suspended Sediment Concentration (SSC) [3]	ASTM D 3977-97	Contact Laboratory	200 mL	Contact Laboratory	Store in ice or refrigerator at 4°C (39.2°F)	7 days
Turbidity	EPA 180.1	1 NTU	100 mL	500 mL polypropylene or glass	Store in ice or refrigerator at 4°C (39.2°F), Dark	48 hours

1 The data in this table is a summary of recommended laboratory requirements. For specific EPA regulatory requirements, consult the sampling and analysis requirements found in 40 CFR 136.

2 Minimum sample volume recommended. Specific volume requirements will vary by laboratory; please check with your laboratory when setting up bottle orders.

3 Use either TSS or SSC, or both, for suspended solids analysis. Upstream and downstream samples should be analyzed by the same method.

2.4 Deciding Where to Sample

The General Permit requires that samples be collected at the following locations:

- Sample the 303(d) listed water body upstream of the construction site discharge
- Sample the 303(d) listed water body immediately downstream of the last point of discharge from the construction site

Additionally, for the purpose of interpreting the results of the samples collected from the 303(d) listed water body, it is advisable to collect and analyze samples of the actual discharge from the construction site. Remember that samples should only be collected from safely accessible locations.

In general, sample away from the bank in or near the main current. Collecting samples directly from ponded, sluggish, or stagnant water should be avoided. Be careful when collecting water upstream or downstream of confluences or point sources to minimize problems caused by backwater effects or poorly mixed flows. Note that samples collected directly downstream from a bridge can be contaminated from the bridge structure or runoff from the road surface.

Choose the upstream location in water that appears to represent the nature of the flow in the stream, for example, if there is a noticeable muddy plume in the center of the stream versus the outer edges, collect the sample from the center of the stream, if possible.

Downstream samples should represent the receiving water mixed with flow from the construction site. For instance if the flow from the site can be observed by either a color or a flow difference, collect the downstream sample from within the affected water.

2.5 Deciding How to Sample

- Only personnel trained in water quality sampling procedures should collect storm water samples.
- Sampling methods and locations should be determined in advance of the runoff event in order to provide sufficient time to gather the supplies and equipment necessary to sample and plan for safe access by the sampling crew(s).
- General guidance for sampling procedures is provided in Section 4 of this document.

2.6 How to Use Your Data

2.6.1 Coupling Your Visual Observations with Your Analytical Data

The General Permit requires that an effective combination of erosion and sediment control measures be implemented on the site at all times during the rainy season. Site inspections and observations before, during, and after storm events should provide visual indications of whether accelerated erosion is occurring on the site and whether the eroded material is being transported off-site. Visual observations of storm water runoff that appears to be transporting silt or sediment off-site (e.g., the water is soil-colored and non-transparent) probably indicate that you have a problem on the site that will be confirmed by the analytical data.

2.6.2 What on Your Site May Be Causing Sediment, Silt and/or Turbidity

Conditions or areas on your site that may be causing sediment, silt, and/or turbidity in your storm water runoff may include:

- Exposed soil areas with inadequate erosion control measures
- Active grading areas
- Poorly stabilized slopes
- Lack of perimeter sediment controls
- Areas of concentrated flow on unprotected soils
- Poorly maintained erosion and sediment control measures
- Unprotected soil stockpiles
- Failure of an erosion or sediment control measure

2.6.3 What To Do If You Get Data That Shows a Problem

The General Permit requires that BMPs be implemented on the construction site to prevent a net increase of sediment load in storm water discharges relative to pre-construction levels. Although the upstream un-contaminated (background) sample may not be representative of pre-construction levels at your site, it will provide a basis for comparison with the sample taken downstream of the construction site.

If a comparison of the upstream and downstream samples indicates an increase in silt, sediment and/or turbidity, follow the reporting requirements as shown in section B.3 (Receiving Water Limitations) of the General Permit. If you have collected samples of the discharge from your site, use these results to help identify if it is your project that is discharging sediment into the receiving water. It is recommended that the following steps be taken as soon as possible.

1. Identify the source of the silt, sediment or turbidity

2. Repair or replace any BMP that has failed

3. Maintain any BMP that is not functioning properly due to lack of maintenance

4. Evaluate whether additional or alternative BMPs should be implemented to provide an effective combination of erosion and sediment control measures on the site. Do not rely solely on perimeter sediment controls, particularly where there are fine-grained soils (such as silts or clays) on the site. Implement erosion controls (source controls) that keep the soil in place, even on temporary slopes and rough graded areas, wherever possible and as necessary to prevent sediment from leaving the site.

If sampling and analysis during subsequent storm events shows that there is still a problem, then repeat the steps above until the analytical results of upstream and downstream samples are relatively comparable.

2.7 Retention of Data

Results of field measurements and laboratory analyses must be kept in the SWPPP, which is required to be kept on the project site until the Notice of Termination is filed and approved by the appropriate RWQCB. It is also recommended that training logs, Chain-Of-Custody (COC) forms and other documentation relating to sampling and analysis be kept with the project's SWPPP). The General Permit requires that records of all inspections, compliance certifications, and noncompliance reporting must be retained for a period of at least three years from the date generated or after project completion.

3.0 Monitoring Program for Pollutants Not Visually Detectable in Storm Water

Monitoring for pollutants not visually detectable is only required if those pollutants are determined to be potentially present in storm water leaving the construction site. Projects should attempt to eliminate the exposure of construction materials to prevent pollution of storm water and limit sampling and analysis requirements.

3.1 What the Permit Says on Monitoring

The General Permit requires that a sampling and analysis program be developed and conducted for pollutants which:

- Are not visually detectable in storm water discharges,
- Are or should be known to occur on the construction site, and
- Could cause or contribute to an exceedance of water quality objectives in the receiving water.

Pollutants that should be considered for inclusion in this sampling and analysis strategy are those identified in your SWPPP (as required by Sections A.5.b. and A.5.c. of the General Permit). The General Permit states that the SWPPP needs to identify a strategy for conducting the sampling and analysis, including the frequency and location(s) at which sampling will be conducted.

Sampling for non-visibly detectable pollutants is required under the following two conditions:

- Visual inspections, currently required before, during and after storm events, indicate that there has been a breach, malfunction, leakage or spill from a BMP that could result in the discharge of pollutants in storm water and the pollutants would not be visually detectable; or
- Storm water comes into contact with soil amendments, other exposed materials, or site contamination that is discharged off the construction site.

A sample of uncontaminated (background) storm water from the site must be collected for comparison with the sample(s) collected from storm water suspected of containing construction-related pollutants. The General Permit also states that the SWPPP needs to describe the sampling procedure, location and rationale for obtaining the uncontaminated sample of storm water.

3.2 What are "known or should be known pollutants"

Pollutants can be considered to be known or should be known to occur on the construction site if they are currently in use or are present as a result of previous land uses. This includes materials that:

- are being used in the construction activities
- are stored on the construction site
- were spilled during construction operations and not cleaned up
- were stored (or used) in a manner that presented the potential for a release of the materials during past land use activities
- were spilled during previous land use activities and not cleaned up
- were applied to the soil as part of past land use activities.

Construction material inventories and the project SWPPP should provide adequate information on materials currently in use or proposed for use on the construction site.

To determine the potential for pollutants to exist on the construction site as a result of past land use activities dischargers should review existing environmental and real estate documentation. Good sources of information on previously existing contamination and past land uses include Environmental Assessments, Initial Studies, Environmental Impact Reports or Environmental Impact Statements prepared under the requirements of the National Environmental Policy Act or the California Environmental Quality Act, and Phase 1 Assessments prepared for property transfers. In some instances, the results of soil chemical analyses may be available and can provide additional information on potential contamination.

3.3 Deciding If Sampling is Required (When to Sample)

All construction projects must ensure that proper inspections are conducted throughout the duration of the project to make sure that appropriately selected BMPs have been implemented, are being maintained, and are effective in preventing potential pollutants from coming in contact with storm water and causing or contributing to an exceedance of water quality objectives in the receiving waters.

The frequency of sampling for non-visible pollutants must be determined based on the exposure of pollutant sources. Runoff only needs to be sampled when there is exposure of a pollutant source to storm water that enters a storm drain or surface water. Inspections of material storage areas that identify a BMP failure, which exposes potential non-visible pollutants to storm water that runs off the construction site, trigger sampling and analysis. If spills are cleaned up and the contaminated material is isolated, eliminating exposure to storm water runoff, sampling does not need to occur. For instances when the potential for previously existing contamination is identified, it may be appropriate to conduct screening analysis during the first one or two storm events of the season to determine if the potential contaminant is running off the construction site.

Figure 3.1 provides a flow chart to help determine when sampling and analysis is required.

3.3.1 Sampling and Analysis is Not Required

Sampling and analysis is not required to be implemented under the following conditions. However, a contingency sampling strategy should be prepared in the event of an incidental discharge. Your SWPPP should also describe why you expect sampling and analysis not to be needed.

- Where a construction project is "self-contained", meaning that the project generates no runoff or any potential runoff discharges containing pollutants can be totally contained within the construction project site without discharging to a water body or storm drain system.

- Where construction materials and compounds are kept or used so that they are not in contact with storm water (e.g., in water-tight containers, under a water-tight roof, inside a building, etc.).

- Where for specific pollutants, the BMPs implemented at the construction site fully contain the exposed pollutants (e.g., bermed concrete washout area).

- For building materials that are in their final constructed form or are designed for exposure (e.g., fence materials, support structures and equipment that will remain exposed at the completion of the project, etc.).

- Where pollutants may have been spilled or released on-site, but have been properly cleaned-up and storm water exposure has been eliminated prior to a storm event.

- For stockpiles of construction materials for which both cover and containment BMPs have been properly implemented to protect them from run-on and from contributing pollutants to storm water runoff.

3.3.2 Sampling and Analysis Is Required

Sampling and analysis is required when non-visible pollutants have the potential to contact storm water and run off the construction site into a storm drainage system or water body. Some examples of this situation are:

- Where construction materials and compounds are stored or used such that they may come in contact with storm water.

- For construction projects that utilize soil amendments (see definition in Section 5) that can come in contact with storm water runoff. (If you have independent test data are available that demonstrates acceptable concentration levels, sampling and analysis may not be required. Contact the appropriate Regional Board to determine acceptable concentration(s) of the material(s) in question.)

- When a leak or spill occurs prior to a storm event and is not fully contained and cleaned.
- When a leak or spill occurs during a storm event, and it cannot immediately be isolated and/or cleaned-up, and the possibility of an off-site discharge exists.
- When during regular inspections of stockpiles, it is discovered that cover and containment BMPs have been compromised and storm water comes in contact with the stockpiled materials resulting in runoff discharging into a storm drain system or water body.
- When material storage BMPs have been compromised, breached, or have failed.

If a determination has been made that sampling is needed, storm water runoff samples must be collected regardless of the time of year, status of the construction site, or day of the week. Samples should be collected during the first two hours of runoff. Storm water inspections and sample collections are required even during non-working days (including weekends and holidays).

3.3.3 Coordinating between Inspection Findings and Sampling

- A breach or malfunction in a BMP, leakage, or a spill observed during regular inspections, which could result in the discharge of pollutants to a storm drain system or water body (e.g., because it was not cleaned up) and that would not be visually detectable in storm water, triggers sampling and analysis.
- If a leakage or spill is observed during inspections, and appropriate measures are taken to fully contain and clean up the leakage or spill, then the potential to discharge pollutants to storm water no longer exists and no sampling is required.

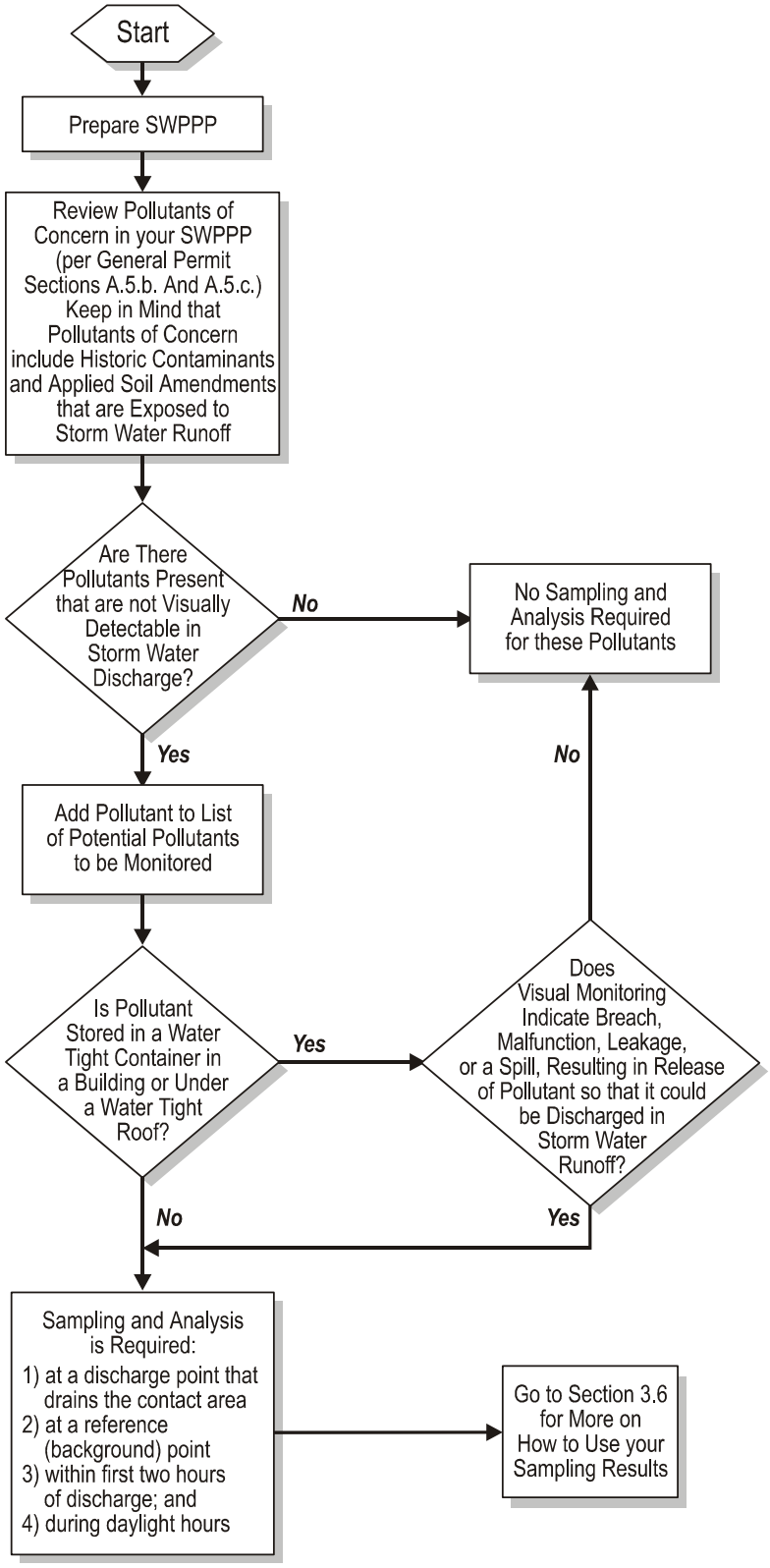

Figure 3-1
Monitoring for Non-Visually Detectable Pollutants

3.4 Deciding What to Sample

Based on your review of potential sources from your SWPPP (required by General Permit sections A5b and A5c), which will include construction related materials, soil amendments, and historic contaminants, develop a list of potential pollutants. Identify from this list those pollutants that are not visibly detectable. These are the constituents that you will likely have to sample for in runoff if the materials are exposed to storm water. Consult with your analytical laboratory or water quality chemist to determine if there are field tests or indicator parameters that can be used. Appendix B lists typical construction materials that might cause non-visible contamination of runoff if exposed to storm water.

3.5 Deciding How to Sample

- Only personnel trained in water quality sampling procedures should collect storm water samples.

- Sampling methods and locations should be determined in advance of the runoff event in order to provide sufficient time to gather the supplies and equipment necessary to sample and plan for safe access by the sampling personnel.

- General guidance for sampling procedures is provided in Section 4 of this document.

3.6 Deciding Where to Sample

Sampling locations must be identified that provide information on both the runoff quality that is affected by material storage, historic contamination or other exposed potential pollutants, and the background runoff quality (i.e., uncontaminated sample). Material storage may be confined to a small area of the project while historic contamination or exposed materials, such as soil amendments, may be widely spread throughout the construction site. For this reason, the sampling locations identified for these two types of potential pollutants may be different.

- Samples must be collected at locations identified in your SWPPP or areas identified by visual observations/inspections where there has been a BMP failure or breach and which can be safely accessed.

- A location that is not affected by material storage activities or by runoff from material storage areas should be selected as a background or reference sampling location for collecting the uncontaminated runoff sample. For a widely spread potential contaminant, you may need to select sampling locations at the perimeter of your site, where storm water enters (unaffected by your activities) and leaves (affected by your activities) the site. The SWPPP must describe the sampling procedure, the location, and the rationale for selecting this location.

3.7 How to Use Your Sampling Data

Corrective action must be initiated where non-visible pollutant sample test results indicate that the construction site's storm water discharges may cause or contribute to a water quality exceedance in the receiving water. This can be determined by comparing your construction site's storm water test results with the background sample.

Where your site's storm water test results significantly exceed the background concentrations, you must evaluate the BMPs to determine what is causing the difference. Possible solutions may include repairing the existing BMPs, evaluating alternative BMPs that could be implemented, and/or implementing additional BMPs (cover and/or containment) which further limit or eliminate contact between storm water and non-visible pollutant sources at your site. Where contact cannot be reduced or eliminated, storm water that has come in contact with the non-visible pollutant source should be retained on-site and not allowed to be discharged to the storm drainage system or a water body. Contact your RWQCB to determine whether it is permissible to discharge the retained storm water. It is advisable to conduct additional sampling during the next runoff event after corrective actions are implemented to demonstrate and document that the problems have been corrected.

3.7.1 Coupling Your Visual Observations with Your Sampling Results

If visual inspection of storm water BMPs used to contain non-visible pollutants at a construction site indicates that a BMP has failed or been compromised then field monitoring of the storm water from the site for non-visible pollutants is required. Of course, any BMP that has been visually inspected and found breached or compromised should be immediately repaired or replaced.

The intent of conducting field monitoring for non-visible pollutants is to obtain an immediate indication if storm water that is discharging from a site has been contaminated. An immediate indication of a polluted discharge requires an immediate response in the form of back tracking from the point of discharge to find the source and take appropriate measures to prevent a recurrence of a polluted discharge.

If at all feasible, the contaminated discharge should be contained and prevented from being discharged off site. After taking steps to correct the failed BMP, it is advisable that field monitoring in the vicinity of the BMP be conducted to verify that pollutants are no longer in the storm water.

3.7.2 What To Do If You Get Data That Shows a Problem

If your data shows a problem, follow the reporting requirements as shown in section B.3 (Receiving Water Limitations) of the General Permit. It is recommended that the following steps be taken as soon as possible:

1. Identify the source

2. Repair or replace any BMP that has failed

3. Maintain any BMP that is not functioning properly due to lack of maintenance

4. Evaluate whether additional or alternative BMPs should be implemented.

If sampling and analysis during subsequent storm events shows that there is still a problem, then repeat the steps above until the analytical results of upstream and downstream samples are relatively comparable.

3.8 Retention of Data

Results of field measurements and laboratory analyses must be kept in the SWPPP, which is required to be kept on the project site until the Notice of Termination is filed and approved by the appropriate RWQCB. It is also recommended that field training logs, Chain-Of-Custody (COC) forms and other documentation relating to sampling and analysis be kept with the project's SWPPP. The General Permit requires that records of all inspections, compliance certifications, and noncompliance reporting must be retained for a period of at least three years from the date generated or after project completion.

4.0 Sampling Procedures

The collection and handling of storm water runoff samples requires care to ensure the integrity and validity of the samples. Special documentation, a Chain of Custody (COC) form, must follow the sample from the collection through the analysis process. Additional documentation to track other information of interest, e.g. field conditions, or required field measurements may also be used. This type of information is recorded on a field tracking form.

Every sample must be collected with care to ensure that the sample is representative of the runoff being tested, must be collected in the right kind of container, be preserved in accordance with the test method's specifications, and stored cold until delivered to an analytical laboratory. Some types of samples have very short holding times and must be analyzed before this holding time is exceeded. Sample handling requirements and documentation form the basis of your sampling quality assurance program.

Before starting any sampling program, contact the analytical laboratory that you plan to use to analyze your samples. Make sure to select a laboratory that will provide you with the support that you need, such as, properly cleaned and preserved sampling containers and COC forms. Some laboratories can assist in identifying courier services available to transport samples to the laboratory, or may be able to provide sampling service for you. All these details need to be worked out in advance of sample collection. The analytical laboratory should also be consulted on what additional samples will need to be collected for quality assurance and quality control purposes.

Both field and/or analytical analysis methods can be used to meet the Permit requirements. Field techniques have the advantage of providing immediate results. However, there are only a limited number of analyses that can be done in the field. Analytical laboratories can analyze for a wide range of parameters, but the data may take several weeks or longer to get back.

Some constituents (e.g. pH) can be evaluated in the field with special equipment. Field samples must be collected and analyzed according to the specifications of the manufacturer of the sampling devices employed. Field equipment must be used by trained staff and the equipment must be calibrated and maintained according to the manufacturer's specifications.

Laboratory analyses should be conducted by a laboratory that is currently accredited by the California Department of Health Services Environmental Laboratory Accreditation Program (ELAP). Analyses must be conducted in accordance with 40 CFR Part 136.

Refer to the California Department of Transportation (Caltrans) *Guidance Manual: Stormwater Monitoring Protocols (Second Edition), July 2000* to assist you in developing a

sampling and analysis program. This document may be downloaded from the Caltrans Website, at http://www.dot.ca.gov/hq/env/stormwater/special/index.htm.

Figure 4-1 is an outline for a typical comprehensive storm water sampling and analysis plan. As some laboratories may have specific requirements for sample collection and handling, specific information or requirements on your samples should be checked with your laboratory.

1 PROJECT OVERVIEW/DESCRIPTION
- 1.1 Description of why the project is being conducted
- 1.2 Description of who is conducting the project
- 1.3 General scope of monitoring activities
- 1.4 Project organization/roles and responsibilities

2 MONITORING SITES
- 2.1 Site location (map)
- 2.2 Written driving directions
- 2.3 Site access instructions (gates, locks, keys, combinations)
- 2.4 Notification procedures

3 ANALYTICAL CONSTITUENTS
- 3.1 List of constituents for sampling and analysis (including sample collection methods, container type, volume required, preservation and laboratory performing analysis)

4 DATA QUALITY OBJECTIVES (DQOs)
- 4.1 Analytical reporting limits
- 4.2 Analytical precision, accuracy and completeness

5 FIELD EQUIPMENT MAINTENANCE
- 5.1 Equipment calibration
- 5.2 Equipment maintenance
- 5.3 Equipment cleaning (bottles/lids/tubing)

6 MONITORING PREPARATION AND LOGISTICS
- 6.1 Weather tracking
- 6.2 Storm selection criteria
- 6.3 Storm action levels
- 6.4 Communications/notification procedures
- 6.5 Sample bottle order
- 6.6 Sample bottle labeling
- 6.7 Field equipment preparation

7 SAMPLE COLLECTION, PRESERVATION AND DELIVERY
- 7.1 Sample collection methods
- 7.2 Field measurement methods
- 7.3 Field equipment list
- 7.4 Sample containers, preservation and handling
- 7.5 QA/QC sample collection methods
- 7.6 Sample labeling (site names, codes, etc.)
- 7.7 Composite sample splitting
- 7.8 Forms and procedures for documenting sample collection and field measurements
- 7.9 Laboratory communication procedures
- 7.10 Sample shipping/delivery, chain-of-custody

8 QUALITY ASSURANCE/QUALITY CONTROL (QA/QC)
- 8.1 Field procedures for QA/QC sample collection

9 LABORATORY SAMPLE PREPARATION AND ANALYTICAL METHODS
- 9.1 Laboratory sample preparation procedures
- 9.2 Analytical constituent table (including analytical methods, holding times and reporting limits)

10 DATA MANAGEMENT AND REPORTING PROCEDURES
- 10.1 Analytical data validation
- 10.2 Electronic data transfer
- 10.3 Filing of electronic and hard copy data
- 10.4 Reports

APPENDICES
- A Clean Sampling Techniques
- B Health and Safety Plan

Figure 4-1
Outline for a Typical Storm Water Sampling and Analysis Plan

5.0 Definitions

Chain of Custody (COC) Form

A form used to track sample handling as samples progress from sample collection to the analytical laboratory. The COC is then used to track the resulting analytical data from the laboratory to the client. COC forms can be provided by an analytical laboratory upon request.

Direct Discharge

Storm water runoff that flows from a construction site directly into a 303(d) water body listed for sedimentation, siltation, or turbidity. Storm water runoff from the construction site is considered a direct discharge to a 303(d) listed water body unless it first flows through:

1) A municipal separate storm sewer system (MS4) that has been formally accepted by and is under control and operation of a municipal entity;

2) A separate storm water conveyance system where there is co-mingling of site storm water with off-site sources; or

3) A tributary or segment of a water body that is not listed on the 303d list before reaching the 303d listed water body or segment.

Electrical Conductivity (EC)

Measure of the ability of water to carry an electric current. This ability depends on the presence of ions, their concentration, valence, mobility and temperature. EC measurements can give an estimate of the variations in the dissolved mineral content of storm water in relation to receiving waters.

Field Measurements

Water quality testing performed in the field with portable field-testing kits or meters.

Field Tracking Form (FTF)

A form that serves as a guide to sampling crews to obtain sampling information and to prescribe and document sample collection information in the field. The FTF usually contains sample identifiers, sampling locations, requested analyses, QC sample identifiers, special instructions, and field notes.

Holding Time

Holding time is specified by the analytical method and is the elapsed time between the time the sample is collected and the time the analysis must be initiated.

pH

The pH is universally used to express the intensity of the acid or alkaline condition of a water sample. The pH of natural waters tends to range between 6 and 9, with neutral being 7. Extremes of pH can have deleterious effects on aquatic systems.

Sampling and Analysis Plan

A document that describes how the samples will be collected and under what conditions, where and when the samples will be collected, what the sample will be tested for, what test methods and detection limits will be used, and what methods/procedures will be maintained to insure the integrity of the sample during collection, storage, shipping and testing (i.e., quality assurance/quality control protocols).

Sediment

Solid particulate matter, both mineral and organic, that is in suspension, is being transported, or has been moved from its site of origin by air, water, gravity, or ice and has come to rest on the earth's surface either above or below sea level.

Sedimentation/Siltation

The process of sediment/silt deposition.

Settleable Solids

The settleable solids (SS) test measures the solid material that can be settled within a water column during a specified time frame. This typically is tested by placing a water sample into an Imhoff settling cone and allowing the solids to settle by gravity. Results are reported either as a volume (mL/L) or a weight (mg/L).

Silt

Soil particles between 0.05mm and 0.002mm in size. (For the purposes of its use here, it also includes clay, which is categorized by a particle size less than 0.002mm.)

Soil Amendment

Any material that is added to the soil to change its chemical properties, engineering properties, or erosion resistance that could become mobilized by storm water and would be not visible in the runoff. Soil amendments include lime, cementitious binders, chlorides, emulsions, polymers, soil stabilizers, and tackifiers applied as a stand-alone treatment (i.e., without mulch). Plant fibers (such as straw or hay), wood and recycled paper fibers (such as mulches and matrices), bark or wood chips, green waste or composted organic materials, and biodegradable or synthetic blanket fibers would not be included as soil amendments in this context because they would be visible in storm water runoff.

Suspended Sediment Concentration (SSC)

The suspended sediment concentration (SSC) test measures the concentration of suspended solid material in a water sample by measuring the dry weight of all of the solid material from a known volume of a collected water sample. Results are reported in mg/L.

Total Suspended Solids (TSS)

Suspended solids in a water sample include inorganic substances, such as soil particles and organic substances, such as algae, aquatic plant/animal waste, particles related to industrial/sewage waste, etc. The total suspended solids test (TSS) test measures the concentration of suspended solids in water by measuring the dry weight of a solid material contained in a known volume of a sub-sample of a collected water sample. Results are reported in mg/L.

Turbidity

Cloudiness of water quantified by the degree to which light traveling through a water column is scattered by the suspended organic and inorganic particles it contains. The scattering of light increases with a greater suspended load. Turbidity is commonly measured in Nephelometric Turbidity Units (NTU).

6.0 Sources of Further Assistance

Regional Water Quality Control Boards

Regional Water Quality Control Board	Address	Contact Name E-mail	Telephone/Fax
NORTH COAST REGION	5550 Skylane Blvd., Suite A Santa Rosa, CA 95403	John Short shorj@rb1.swrcb.ca.gov	(707) 576-2065 FAX: (707) 523-0135
SAN FRANCISCO BAY REGION	1515 Clay St., Suite 1400 Oakland, CA 94612	Hossain Kazemi mhk@rb2.swrcb.ca.gov	(510) 622-2369 FAX: (510) 622-2460
CENTRAL COAST REGION	81 Higuera St., Suite 200 San Luis Obispo, CA 93401-5427	Jennifer Bitting jbitting@rb3.swrcb.ca.gov	(805) 549-3334 FAX: (805) 543-0397
LOS ANGELES REGION	320 W. 4th St., Suite 200 Los Angeles, CA 90013	Yi Lu (Inland Los Angeles) ylu@rb4.swrcb.ca.gov	(213) 576-6728 FAX: (213) 576-6686
		Ejigu Soloman (Ventura County) esoloman@rb4.swrcb.ca.gov	213) 576-6727 FAX: (213) 576-6686
		Xavier Swamikannu (Coastal) xswami@rb4.swrcb.ca.gov	(213) 576-6654 FAX (213) 576-6686
CENTRAL VALLEY REGION **Sacramento Office**	3443 Routier Rd., Suite A Sacramento, CA 95827-3098	Sue McConnell mcconns@rb5s.swrcb.ca.gov	(916) 255-3098 FAX: (916) 255-3015
CENTRAL VALLEY REGION **Fresno Branch Office**	3614 East Ashlan Ave. Fresno, CA 93726	Jarma Bennett bennettj@rb5f.swrcb.ca.gov	(559) 445-6046 FAX: (559) 445-5910
CENTRAL VALLEY REGION **Redding Branch Office**	415 Knollcrest Dr. Redding, CA 96002	Carole Crowe crowec@rb5r.swrcb.ca.gov	(530) 224-4849 FAX: (530) 224-4857
LAHONTAN REGION **South Lake Tahoe Office**	2501 Lake Tahoe Blvd. South Lake Tahoe, CA 96150	Mary Fiore-Wagner fiorm@rb6s.swrcb.ca.gov	(530) 542-5245 FAX: (530) 544-2271
LAHONTAN REGION **Victorville Office**	15428 Civic Dr., Suite 100 Victorville, CA 92392	Eugene Rondash erondash@rb6v.swrcb.ca.gov	(760) 241-2434 FAX: (760) 241-7308
COLORADO RIVER BASIN REGION	73-720 Fred Waring Dr., Suite 100 Palm Desert, CA 92260	Abdi Haile haila@rb7.swrcb.ca.gov	(760) 776-8939 FAX: (760) 341-6820
		Rosalyn Fleming flemr@rb7.swrcb.ca.gov	(760) 776-8939 FAX: (760) 341-6820

Regional Water Quality Control Board	Address	Contact Name E-mail	Telephone/Fax
SANTA ANA REGION	3737 Main St., Suite 500 Riverside, CA 92501-3339	Michael Roth (Riverside County) mroth@rb8.swrcb.ca.gov	(909) 320-2027 FAX: (909) 781-6288
		Aaron Buck (Orange County) abuck@rb8.swrcb.ca.gov	(909) 782-4469 FAX: (909) 781-6288
		Muhammad Bashir (San Bernardino County) mbashir@rb8.swrcb.ca.gov	(909) 320-6396 FAX: (909) 781-6288
SAN DIEGO REGION	9771 Clairemont Mesa Blvd., Suite A San Diego, CA 92124	Jane Ledford ledfj@rb9.swrcb.ca.gov	(858) 467-3272 FAX: (858) 571-6972

State Water Resources Control Board

Division of Water Quality
Storm Water Permit Section
P.O. Box 1977
Sacramento, CA 95812-1977
Construction Inquiry Line: (916) 341-5537
Web Site: http://www.swrcb.ca.gov/
e-mail: stormwater@swrcb.ca.gov

How to Obtain a List of State Certified Laboratories

http://www.dhs.ca.gov/ps/ls/elap/html/lablist_county.htm

Other Useful Web Sites

California Stormwater Quality Task Force
http://www.stormwatertaskforce.org/

California Department of Transportation
Environmental Program http://www.dot.ca.gov/hq/env/index.htm

Storm Water Management Program http://www.dot.ca.gov/hq/env/stormwater/

APPENDIX A

General Outline of Information that should be included in your SWPPP for the Sampling and Analysis Requirements

1. Sedimentation monitoring

(In this section identify whether you need to sample for sedimentation, siltation, or turbidity. At a minimum, identify elements a & b. Note that some water bodies are identified as impaired on a segment basis rather than for the whole water body. Only construction sites with direct discharges into water bodies impaired for sediment, silt, or turbidity are required to perform this sampling. This type of monitoring may not be necessary for all projects. If you do need to conduct this monitoring your SWPPP needs to include section 2, if not move on to section 3.)

a. Site storm water discharge points

b. Receiving water

c. Review 303d list

2. Monitoring strategy for sediment

(In this section, identify the sampling process. Include where you will sample (at least one up and one down stream location is needed), what you will sample for, and your field quality control samples. Identify how your samples will be analyzed. Field measurements may be appropriate. If you conduct field sampling, you need to follow the field meter instructions, including calibration requirements.)

a. Sample locations

   i. Location upstream of the construction site in the receiving water (permit required location)

   ii. Location immediately downstream of the construction site in the receiving water (permit required location)

   iii. Location where storm water is discharged from the construction site (recommended location)

b. Parameters to be analyzed

   i. Field measurements

   ii. Laboratory analyses

c. Quality control samples, such as split samples, field blanks, equipment blanks.

3. Non-visible pollutant monitoring

(In this section, identify the potential sources of non-visual pollutants. Your SWPPP should discuss the materials in use and the activities conducted on your site, and any past contamination of your project site. These three elements are the potential pollutant sources. Determine if the potential pollutants from these sources are non-visible and can be discharged in storm water runoff. Most projects will have to develop this sampling and analysis plan. If you don't think your site can discharge pollutants, because every thing is either stored so that it doesn't contact storm water or because your site doesn't discharge runoff, it is advisable to develop a contingency sampling plan and analysis strategy, in the event of spill or containment failure. Identify how you will use your current inspection program to trigger sampling and analysis.)

a. Source identification

   i. Pre-construction contamination

   ii. Construction activities

   iii. Construction materials

b. Connect your sampling program to your inspection program

4. Monitoring strategy for non-visual pollutants

(In this section, identify the sampling process. Include where you will sample, what you will sample for, when you will sample, and your field quality control samples. For sampling locations, you need to collect samples of runoff that contacts the stored materials and runoff unaffected by it. The unaffected runoff can be immediately upstream of the potential source or from a reference location on the site. Identify how your samples will be analyzed. Field measurements and indicator parameters may be appropriate. If you conduct field sampling, you need to follow the field meter instructions including calibration requirements.)

a. Sample locations

   i. Location downstream from the storage or spill area

   ii. Location unaffected by the storage or spill area

b. Parameters to be analyzed

c. Quality control samples, such as split samples, field blanks, equipment blanks

5. Data Evaluation

(In this section, you need to identify how you will use your data. In general, if you find high levels of sediment, analytes or indicator parameters, relative to background levels, you need to contact the Regional Board, identify the source, and review your BMPs for malfunctions or potential upgrades.)

6. Training for sampling personnel

(In this section, identify how you have trained your staff or whether you hired trained sampling staff. All personnel collecting samples should be trained to collect samples in accordance with the regulatory requirements (40 CFR Part 136) or follow manufacturers instructions for use and calibration of field meters and instruments. You may want to subcontract sample collection to firms that specialize in water quality sampling)

7. Sampling procedures

(In this section identify your sampling procedures, e.g., how you will decide when to sample; how samples will be collected; if there is a special order to sample collection; what field paper work will be completed (field tracking forms, chains of custody); how samples will be handled and transmitted to the laboratory. Other sampling procedures may be needed depending on the specifics of you site and sampling program.)

8. Sampling and analysis records

(In this section, identify where you are storing records associated with sampling and analysis. Field and analytical data must be kept in the SWPPP until the Notice of Termination is filed and approved. But you also need to keep other documents associated with the sampling program, such as calibration charts, field tracking forms chains of custody, training records of samplers, laboratory certification information. Identify where this information is kept if other than in the SWPPP.)

APPENDIX B

List of Common Potential Non-visible Pollutants at Construction Projects

The following table represents potential sources of non-visible pollutants that are common to most construction sites. This list is not meant to be inclusive but to provide direction to construction site operators. Over the next year, the State Water Resources Control Board plans to conduct research into non-visible pollutants to provide further guidance and information on appropriate analytical and field tests for common construction pollutants.

List of Common Potential Non-visible Pollutants at Construction Projects

Category	Potential Pollutant Source	Field Indicator of Pollutant Release	Laboratory Analysis
Line flushing	Chlorinated water	Colormetric kit	Residual chlorine
Portable toilets	Bacteria, disinfectants	NA	Total/fecal coliform
Concrete & Masonry	Acid wash	pH meter	pH
	Curing compounds	pH meter	pH, alkalinity, volatile organic compounds (VOCs)
	Concrete rinse water	ph meter	pH
Painting	Resins	NA	Semi-volatile organic compounds (SVOCs)
	Thinners	Phenols kit	Phenols, VOCs
	Paint Strippers	NA	VOCs
	Solvents	Phenols kit	Phenols, VOCs
	Adhesives	Phenols kit	Phenols, SVOCs
	Sealants	N/A	SVOCs
Cleaning	Detergents	Colorimetric kit	MBAS, phosphates
	Bleaches	Colorimetric kit	Residual chlorine
	Solvents	Phenols kit	VOCs
Landscaping	Pesticides/Herbicides	NA	Check with analytical laboratory
	Fertilizers	NA	$NO_3/NH_3/P$
	Lime and gypsum	pH meter	Acidity/alkalinity
	Aluminum sulfate, sulfur	Total dissolved solids (TDS), pH	TDS, alkalinity
Treated wood	Copper, arsenic, selenium	Metals test kits may be available	Metals
Soil amendments & dust control	Lime, gypsum	pH meter	pH
	Plant gums	NA	Biochemical oxygen demand (BOD)
	Magnesium chloride	TDS	Alkalinity, TDS
	Calcium chloride	TDS	Alkalinity, TDS
	Natural brines	TDS	Alkalinity, TDS
	Lignosulfonates	TDS	Alkalinity, TDS